| 名　　称 | 材　　料 | 数量 | 图　　号 | 附　　注 |
|---|---|---|---|---|
| 基座 Housing | Nylon 66 UL94V-0 | 1 | LHE\GC-17 | White(白色) |
| 长针 Long needle | 黄铜镀锡 Brass Tin | 2 | | |
| 短针 Short needle | 黄铜镀锡 Brass Tin | N-2 | | |
| 纸带 Paper tape | | | | |
| 胶带 Adhesive tape | | | | |

EH-5A(2.4长针)编带装

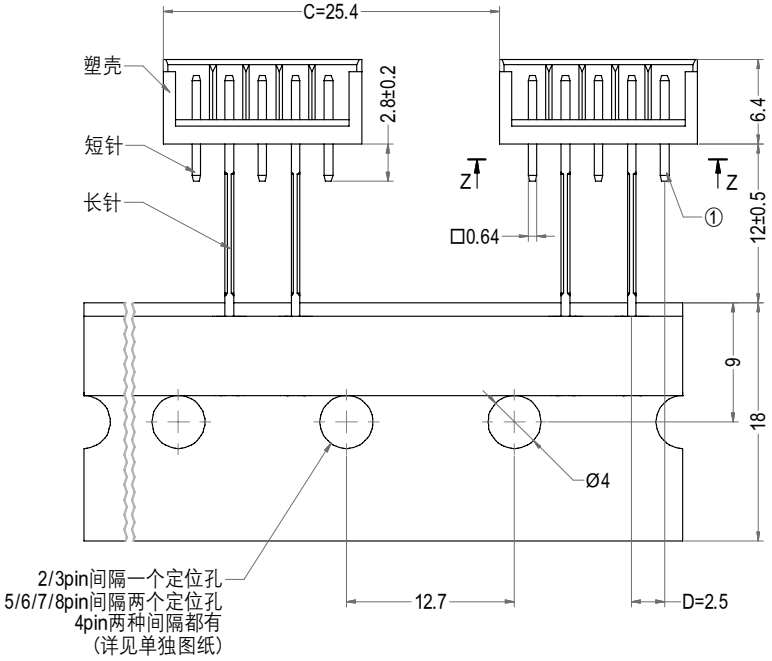


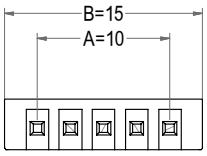


Z-Z

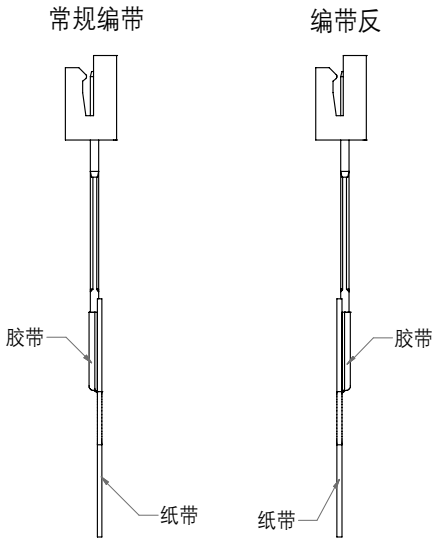


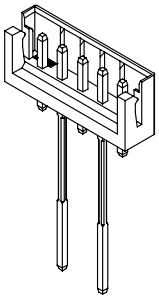

针座3D图示

| Poles | Part No. | Description | DIM=A | DIM=B | DIM=C | DIM=D |
|---|---|---|---|---|---|---|
| 2 | A2503-WVG02 | EH-2A编带装 | 2.50 | 7.50 | 12.70 | 2.50 |
| 3 | A2503-WVG03 | EH-3A编带装 | 5.00 | 10.00 | 12.70 | 2.50 |
| 4 | A2503-WVG04 | EH-4A(1.3长针)编带装(空) | 7.50 | 12.50 | 25.40 | 2.50 |
| 4 | A2503-WVG04-B | EH-4A(1.3长针)编带装(并) | 7.50 | 12.50 | 12.70 | 2.50 |
| 4 | A2503-WVG04 | EH-4A(2.4长针)编带装(空) | 7.50 | 12.50 | 25.40 | 5.00 |
| 4 | A2503-WVG04-B | EH-4A(2.4长针)编带装(并) | 7.50 | 12.50 | 12.70 | 5.00 |
| 5 | A2503-WVG05 | EH-5A(2.4长针)编带装 | 10.00 | 15.00 | 25.40 | 5.00 |
| 6 | A2503-WVG06 | EH-6A(2.4长针)编带装 | 12.50 | 17.50 | 25.40 | 5.00 |
| 7 | A2503-WVG07 | EH-7A(3.5长针)编带装 | 15.00 | 20.00 | 25.40 | 7.50 |
| 8 | A2503-WVG08 | EH-8A(3.5长针)编带装 | 17.50 | 22.50 | 25.40 | 7.50 |
| | | | | | | |
| 2 | A2503-WVG02-F | EH-2A编带装(反) | 2.50 | 7.50 | 12.70 | 2.50 |
| 3 | A2503-WVG03-F | EH-3A编带装(反) | 5.00 | 10.00 | 12.70 | 2.50 |
| 4 | A2503-WVG04-F | EH-4A(1.3长针)编带装(空)(反) | 7.50 | 12.50 | 25.40 | 2.50 |
| 4 | A2503-WVG04-B-F | EH-4A(1.3长针)编带装(并)(反) | 7.50 | 12.50 | 12.70 | 2.50 |
| 4 | A2503-WVG04-F | EH-4A(2.4长针)编带装(空)(反) | 7.50 | 12.50 | 25.40 | 5.00 |
| 4 | A2503-WVG04-B-F | EH-4A(2.4长针)编带装(并)(反) | 7.50 | 12.50 | 12.70 | 5.00 |
| 5 | A2503-WVG05-F | EH-5A(2.4长针)编带装(反) | 10.00 | 15.00 | 25.40 | 5.00 |
| 6 | A2503-WVG06-F | EH-6A(2.4长针)编带装(反) | 12.50 | 17.50 | 25.40 | 5.00 |
| 7 | A2503-WVG07-F | EH-7A(3.5长针)编带装(反) | 15.00 | 20.00 | 25.40 | 7.50 |
| 8 | A2503-WVG08-F | EH-8A(3.5长针)编带装(反) | 17.50 | 22.50 | 25.40 | 7.50 |

| LHE® 浙江联和电子有限公司 | | | |
|---|---|---|---|
| 品名 | EH-A编带装 | 比例 | 7 : 4 |
| 料号 | A2503-WVG | 未注公差(mm) | |
| 图号 | LHE\GC-17 | >0~3 | ±0.12 |
| 材料 | Nylon 66 UL94V-0 | >3~18 | ±0.15 |
| 制图 | 王天2024-05-13 | >18~50 | ±0.3 |
| 审核 | 天琴2024-05-13 | >50~120 | ±0.5 |
| 批准 | 季育文2024-05-13 | X° | ±3° |
| 视角 | | X.X° | ±0.5° |