承　认　书
SPECIFCATION FOR APPROVAL

客户名称 CUSTOMER: _____

品名 DESCRIPTION: SAN型压接式条形连接器

料号 CUSERTOMER PART NO: B2001

客户确认 APPROVED SIGNATURES

核准 APPROVAL: _____ 日期 DATE: _____

工程 ENGINEERING: _____ 日期 DATE: _____

品管 QC: _____ 日期 DATE: _____

承认结果: ☐ 承认 ☐ 不承认 ☐ 重新送样

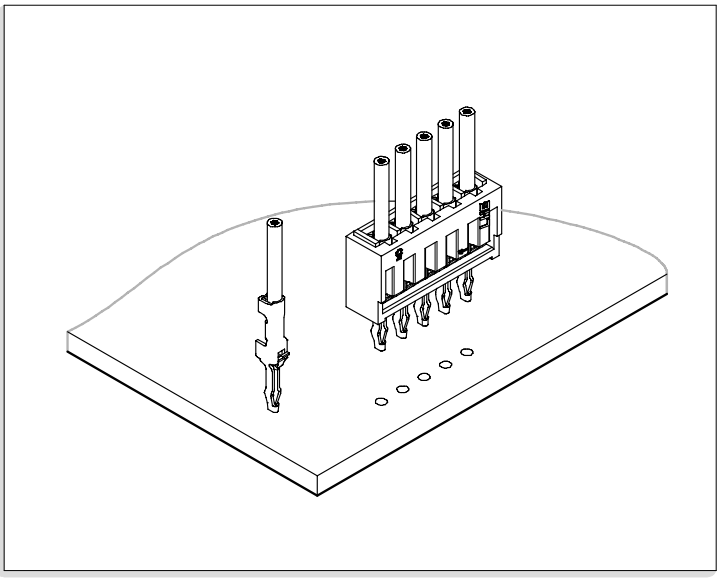

规格 Specifications

1. 极数 Poles: 2 to 20P
2. 额定电流 Current rating: 2.0A AC,DC
3. 额定电压 Voltage rating: 250V AC,DC
4. 温度范围 Temperature range: -25°C to +105°C
   (含通电温度上升值)
   (Including temperature rise in applying electrical current)
5. 接触电阻 Contact resistance: 初期 Initial value / /
   环境测试后 After environmental testing / /
6. 绝缘电阻 Insulation resistance: ≥1000MΩ
7. 耐电压 Withstanding voltage: 800V AC/minute
8. 适用线规 Applicable wire: AWG #30 to #24
9. 适用基板厚度 Applicable PC board thickness: 1.2~1.6mm

浙江联和电子有限公司　地址: 浙江省乐清市乐清港湾区创新路8号
Zhejiang Lianhe Electronics Co., Ltd.　Add: No 8 Innovation Road, Yueqingwan area, Yueqing Zhejiang
Web:www.lhecn.com　www.lhe.en.alibaba.com　Tel:86-0577-62383668 0577-62383212 Fax:86-0577-62382566

目录(COVER) 1

料号说明(DESCRIPTION OF ITEM NUMBER) 2

系列说明和安装尺寸(Series illustrated and Mouting Measurement) 5

图纸(DRAWING) 6

产品性能测试(PERFORMANCE TEST) 9

实验报告(TEST REPORT) 11

认证(CERTIFICATION) 15

PA66 RoHS报告(PA66 RoHS REPORT) 25

端子RoHS报告(TERMINAL ROHS REPORT) 36

MSDS 43

反馈与建议(FEEDBACK AND SUGGESTIONS) 49

制订 Edit:	吴晓金	日期 DATE:	2022-10-30
审核 Check:	陈浙海	日期 DATE:	2022-10-30
批准 Approval:	季育文	日期 DATE:	2022-10-30

壳体料号说明 HOUSING

B 2001 - S H B 02 X2 - * - ** - ** - **

A: Wire to Board Connectors
B: Board-in Connectors
C: Wire to Wire Connectors
D: Hard Splices Connectors
F: FFC/FPC Connectors
I : IDC

系列号 Series Number

特征类别(默认空)
Feature Category: S=锁片型

产品类别 Product Category:
H=壳体 Housing
P=密封件 Water Proofing
F=配件 Fitting

同类别多型号序号 (默认空)
Same Series Different Type: B~ZZ

单列极数 The Pin Number of Single Row: 01~**

多列列数 The Pin Number of Several Row: X2~X* (无则空)

壳体材料 Housing Material:
1=PA66
2=PA66=G=灼热丝增强
3=PA46
4=PA6T
5=PA9T
6=PBT
7=PPO
8=LCP
9=U=PA66-UL

壳体材料特性 Housing Material Specialty:
V2 UL阻燃等级标准(默认不注明)
V0 UL阻燃等级标准
Z=灼热丝是按照(IEC60695/GB/T5169)标准,
符合GWIT750°C,GWFI960°C

壳体颜色 Housing Color:
OR=橙色 Orange
P=粉色 Pink
R=红色 Red
VI=紫色 Violet
Y=黄色 Yellow
GY=灰色 Gray
BK=黑色 Black
G=绿色 Green
BL=蓝色 Blue
BR=棕色 Brown
TR=透明白 Transparent
W=白色 White
EC=米白 ECRU
TG=透明绿 Transparent Green
壳体材料3/4/5/8默认米色
壳体材料7默认黑色
壳体材料1/2/6/9默认白色
(默认可为空)

客户专用代码
Customer Special Code: 表示和常规件不同,用来代表某个客户

备注:*部分内容只在产品标签中体现!

针座料号说明 WAFER

B 2001 -DHWVB 02 X2 - N* - C* - ** - ** - * - ** - ** - ** - **

A: Wire to Board Connectors
F: FFC/FPC Connectors
I : IDC

系列号 Series Number

DB=防呆柱+全包
B=全包 All inclusive
DH=防呆柱+高背型
特征类别(默认空)H=高背型 High box type
Feature Category: D=固定防呆柱 Fixed

WV=直针座 Straight Angle
WR=弯针座 Right Angle
产品类别 SV=立贴式 V-SMT
Product Category: SR=卧贴式 R-SMT

同类别多型号序号 (默认空)
Same Series Different Type: B~ZZ

单列极数 The Pin Number of Single Row: 01~**

多列列数 The Pin Number of Several Row: X2~X* (无则空)

N为标准缺针,*为非标缺针序号(例N1.2.5)(无则空)

C为插针样式不同(除打点、缺针外)*为序号(无则空)

打点样式
Point Style:K为打点,K2.4表示在第2枚,第4枚上打点,默认打点无数字标注(无则空)

接触件材料 P=磷青铜 Phos.Bronze
Contact Material: B=黄铜 Brass

0=素材酸洗 None
1=镀镍 Nickel Plating
2=镀亮锡 Tin Plating
3=镀镍氩光锡 Matt Tin-Nickel Plating
4=镀铅锡 Tin-Lead Plating
5=镀铜锡 Tin-Cu Plating
6=镀镍银 Silver-Nickel Plating
7=镀镍金 Gold-Nickel Plating
8=镀镍局部金 Half Gold-Nickel Plating
表面处理 9=镀亮锡局部金 Half Gold-Tin Plating
Surface Processing: 10=镀镍亮锡 Tin-Nickel Plating 默认B10可为空(A5001默认B3)

1=PA66
2=PA66=G=灼热丝增强
3=PA46
4=PA6T
5=PA9T
6=PBT
7=PPO
壳体材料 8=LCP
Housing Material: 9=U=PA66-UL

V2 UL阻燃等级标准(默认不注明)
V0 UL阻燃等级标准
壳体材料特性 Z=灼热丝是按照(IEC60695/GB/T5169)标准,
Housing Material Specialty: 符合GWIT750℃,GWFI960℃

其他特殊要求
Other Special Requirements: 如:SE(对固定力要求高5N)

OR=橙色 Orange
P=粉色 Pink
R=红色 Red
VI=紫色 Violet
Y=黄色 Yellow
GY=灰色 Gray
BK=黑色 Black
G=绿色 Green
BL=蓝色 Blue
BR=棕色 Brown
TR=透明白 Transparent
W=白色 White
壳体颜色 EC=米白 ECRU
Housing Color: TG=透明绿 Transparent Green
壳体材料3/4/5/8默认米色
壳体材料7默认黑色
壳体材料1/2/6/9默认白色
(默认可为空)

客户专用代码
Customer Special Code: 表示和常规件不同,用来代表某个客户

备注:*部分内容只在产品标签中体现!

SAN料号说明 Description of item number

端子料号说明 TERMINAL

B 2001 N - T 2 2 A 30 5 P 2

A: Wire to Board Connectors
B: Board-in Connectors
C: Wire to Wire Connectors
F: FFC/FPC Connectors
I : IDC
D: Chain Terminals and Splices

系列号 Series Number

K=直形带锁 N=直形
Z=旗形带锁 Q=旗形
X=横插带锁 H=横插
Y=叉形端子 J=插片
R=环形端子 C=圆形
G=接线端子
W=鲨鱼齿端子
特征类别(默认空) B=子弹形端子
Feature Category: U=耳扒形端子

产品类别 Product Category: T=端子 Terminal

同类别多型号序号 (默认空)
Same Series Different Type: 1~9

同型号多尺寸序号 (默认空)
Same Type Different size: 1~9

适用线规(默认空) A=小脚 B=中脚
Applicable Wire: C=高脚 D=大脚

料带厚度单位: mm X100 (0.3X100=30 默认空)

配合厚度单位: mm X10 (0.5X10=5 默认空)
注: 所有<灰色>说明, 为D系列分类附加料号及说明!

Z=紫铜 Copper
S=不锈钢 Stainless Steel
P=磷青铜 Phos.Bronze
材质 Material: B=黄铜 Brass

0=素材酸洗 None
1=镀镍 Nickel Plating
2=镀亮锡 Tin Plating
3=镀镍氩光锡 Matt Tin-Nickel Plating
4=镀铅锡 Tin-Lead Plating
5=镀铜锡 Tin-Cu Plating
6=镀镍银 Silver-Nickel Plating
7=镀镍金 Gold-Nickel Plating
8=镀镍局部金 Nickel-Gold
表面处理 9=镀亮锡局部金 Half Gold-Tin Plating
Surface processing: 10=镀镍亮锡 Tin-Nickel Plating

备注:表面处理内容只在产品标签中体现!

其它料号说明 OTHER

P 0001 - B

P: Other Types

产品序号 Product Number

同型号序号 Same Series Different Type: B~Z (默认空)

安装尺寸 Mounting Measurement

立式 Straight Abgle(V-Type)

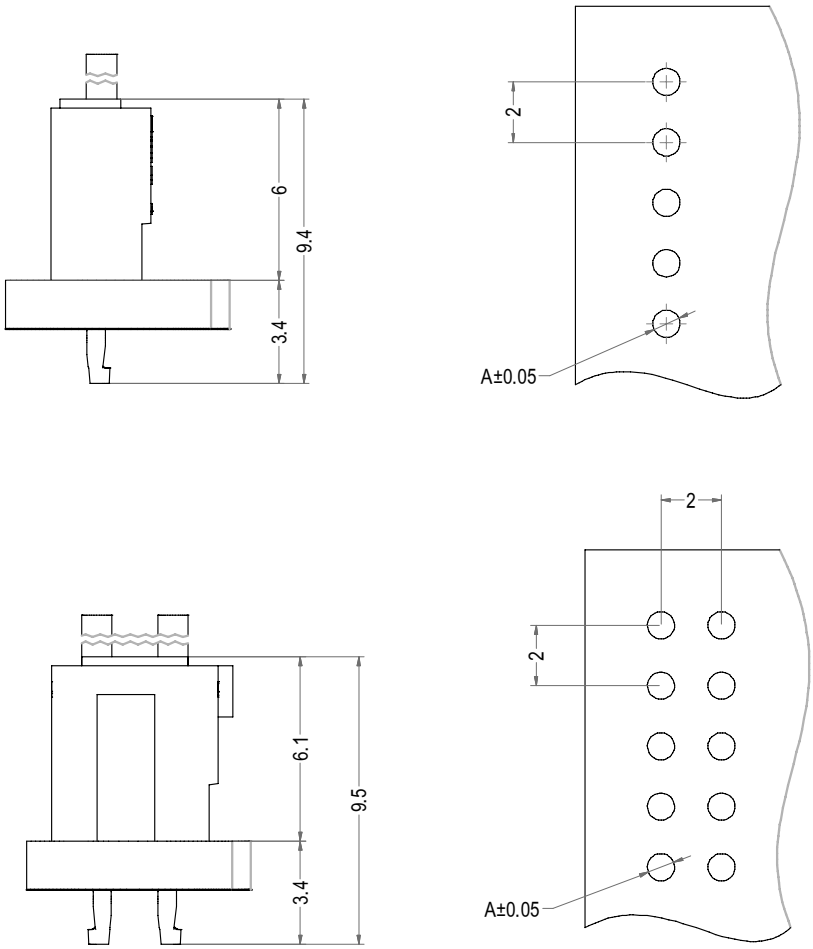

Part No.	Description	DIM=A
B2001-TP	SAN-T11	0.8
B2001-T12P	SAN-T12	0.8
B2001-T13P	SAN-T13	1

LHE® 浙江联和电子有限公司			
品名	SAN立式安装图示	比例	4 : 1
料号	B2001立式安装图示	未注公差(mm)	
图号	LHE\GC-5	>0~3	±0.12
材料	/	>3~18	±0.15
制图	吴瑞金 2022-10-30	>18~50	±0.3
审核	陈浙海 2022-10-30	>50~120	±0.5
批准	陈浙海 2022-10-30	X°	±3°
视角		X.X°	±0.5°

名　　称	材　　料	图　　号	附　　注
基座 Housing	Nylon 66 UL94V-0	LHE\GC-6	White(白色)

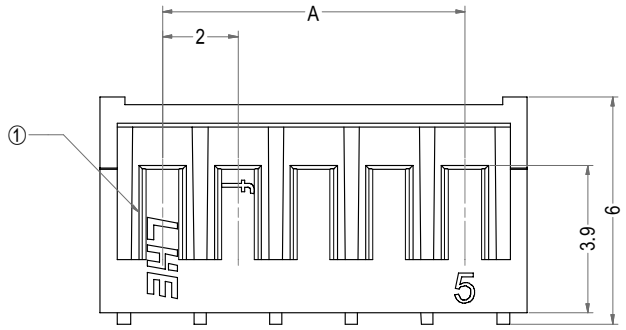

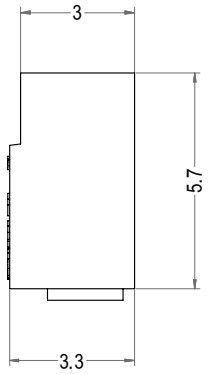

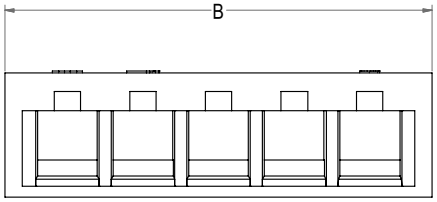

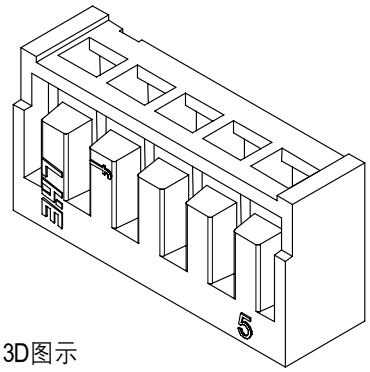

3D图示

Poles	Part No.	Description	DIM=A	DIM=B
2	B2001-H02	SAN-2Y	2.00	5.30
3	B2001-H03	SAN-3Y	4.00	7.30
4	B2001-H04	SAN-4Y	6.00	9.30
5	B2001-H05	SAN-5Y	8.00	11.30
6	B2001-H06	SAN-6Y	10.00	13.30
7	B2001-H07	SAN-7Y	12.00	15.30
8	B2001-H08	SAN-8Y	14.00	17.30
9	B2001-H09	SAN-9Y	16.00	19.30
10	B2001-H10	SAN-10Y	18.00	21.30
11	B2001-H11	SAN-11Y	20.00	23.30
12	B2001-H12	SAN-12Y	22.00	25.30
13	B2001-H13	SAN-13Y	24.00	27.30
14	B2001-H14	SAN-14Y	26.00	29.30
15	B2001-H15	SAN-15Y	28.00	31.30
16	B2001-H16	SAN-16Y	30.00	33.30
17	B2001-H17	SAN-17Y	32.00	35.30
18	B2001-H18	SAN-18Y	34.00	37.30
19	B2001-H19	SAN-19Y	36.00	39.30
20	B2001-H20	SAN-20Y	38.00	41.30

LHE® 浙江联和电子有限公司			
品名	SAN-Y	比例	5 : 1
料号	B2001-H	未注公差(mm)	
图号	LHE\GC-6	>0~3	±0.12
材料	Nylon 66 UL94V-0	>3~18	±0.15
制图	吴瑞金 2022-10-30	>18~50	±0.3
审核	陈渐海 2022-10-30	>50~120	±0.5
批准	季育文 2022-10-30	X°	±3°
视角		X.X°	±0.5°

名　　称	材　　料	图　　号	附　　注
基座 Housing	Nylon 66 UL94V-0	LHE\GC-7	White(白色)

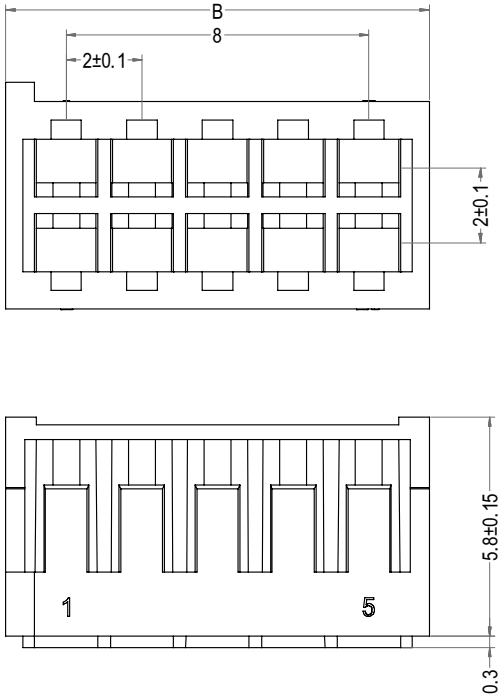

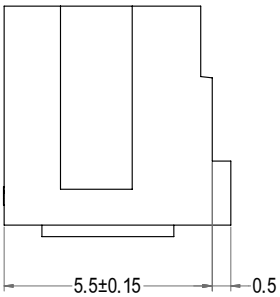

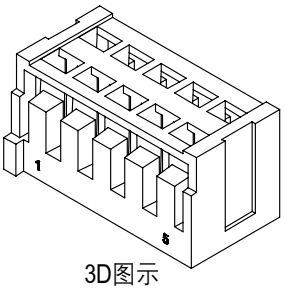

3D图示

Poles	Part No.	Description	DIM=A	DIM=B
2	B2001-H02X2	SAND-2X2Y	2.00	5.20
3	B2001-H03X2	SAND-2X3Y	4.00	7.20
4	B2001-H04X2	SAND-2X4Y	6.00	9.20
5	B2001-H05X2	SAND-2X5Y	8.00	11.20
6	B2001-H06X2	SAND-2X6Y	10.00	13.20
7	B2001-H07X2	SAND-2X7Y	12.00	15.20
8	B2001-H08X2	SAND-2X8Y	14.00	17.20
9	B2001-H09X2	SAND-2X9Y	16.00	19.20
10	B2001-H10X2	SAND-2X10Y	18.00	21.20
11	B2001-H11X2	SAND-2X11Y	20.00	23.20
12	B2001-H12X2	SAND-2X12Y	22.00	25.20
13	B2001-H13X2	SAND-2X13Y	24.00	27.20
14	B2001-H14X2	SAND-2X14Y	26.00	29.20
15	B2001-H15X2	SAND-2X15Y	28.00	31.20

LHE® 浙江联和电子有限公司			
品名	SAND-2XY(96)	比例	5 : 1
料号	B2001-HX2	未注公差(mm)	
图号	LHE\GC-7	>0~3	±0.12
材料	Nylon 66 UL94V-0	>3~18	±0.15
制图	王天 2024-08-16	>18~50	±0.3
审核	陈渐海 2024-08-16	>50~120	±0.5
批准	季育文 2024-08-16	X°	±3°
视角		X.X°	±0.5°

名　称	材　料	图　号	附　注
端子 Terminal	Phosphor Bronze	LHE\GC-8	

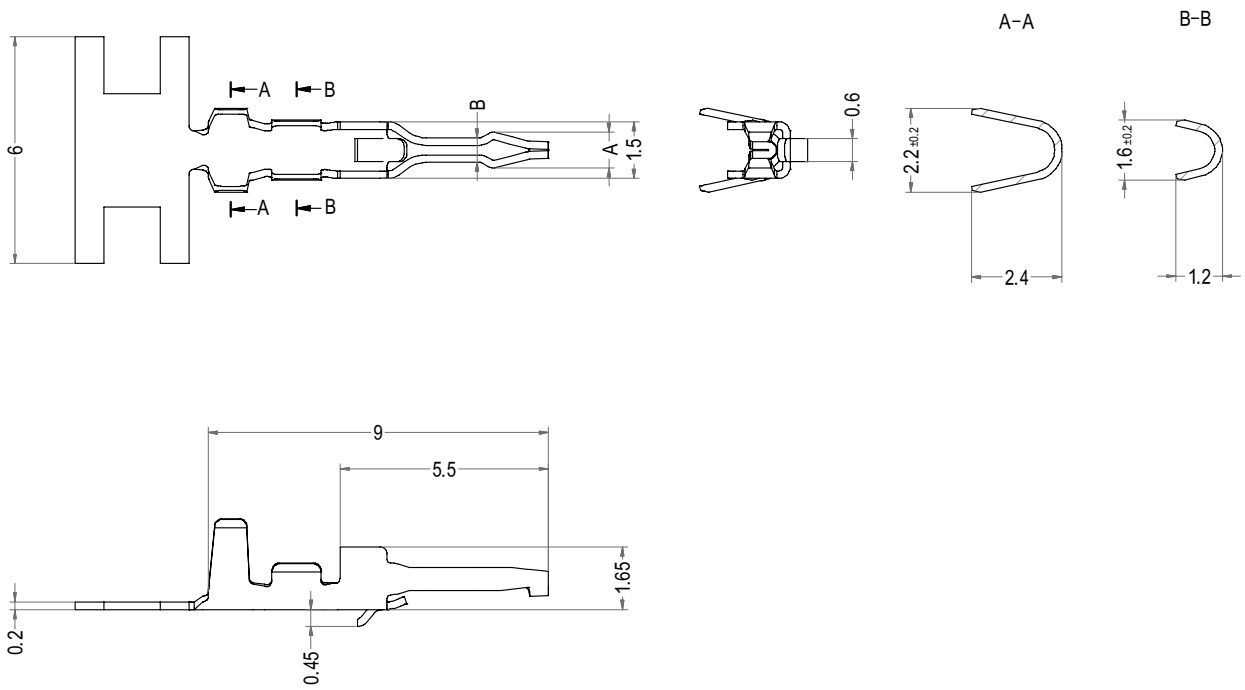

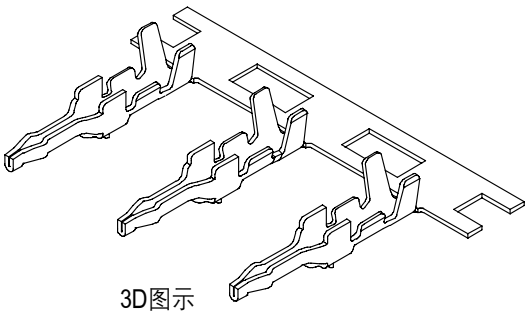

3D图示

Part No.	Description	DIM=A	DIM=B	Finish	Finish
B2001-TP2	SAN-T11	0.95	0.80	Tin	10,000pcs
B2001-T12P2	SAN-T12	0.85	0.80	Tin	10,000pcs
B2001-T13P2	SAN-T13	1.1	0.80	Tin	10,000pcs
B2001-T14P2	SAN-T14	0.95	0.85	Tin	10,000pcs

LHE® 浙江联和电子有限公司			
品名	SAN-T	比例	5 : 1
料号	B2001-T	未注公差(mm)	
图号	LHE\GC-8	>0~3	±0.12
材料	Phosphor Bronze	>3~18	±0.15
制图	吴瑞金 2022-10-30	>18~50	±0.3
审核	陈渐海 2022-10-30	>50~120	±0.5
批准	季育文 2022-10-30	X°	±3°
视角		X.X°	±0.5°

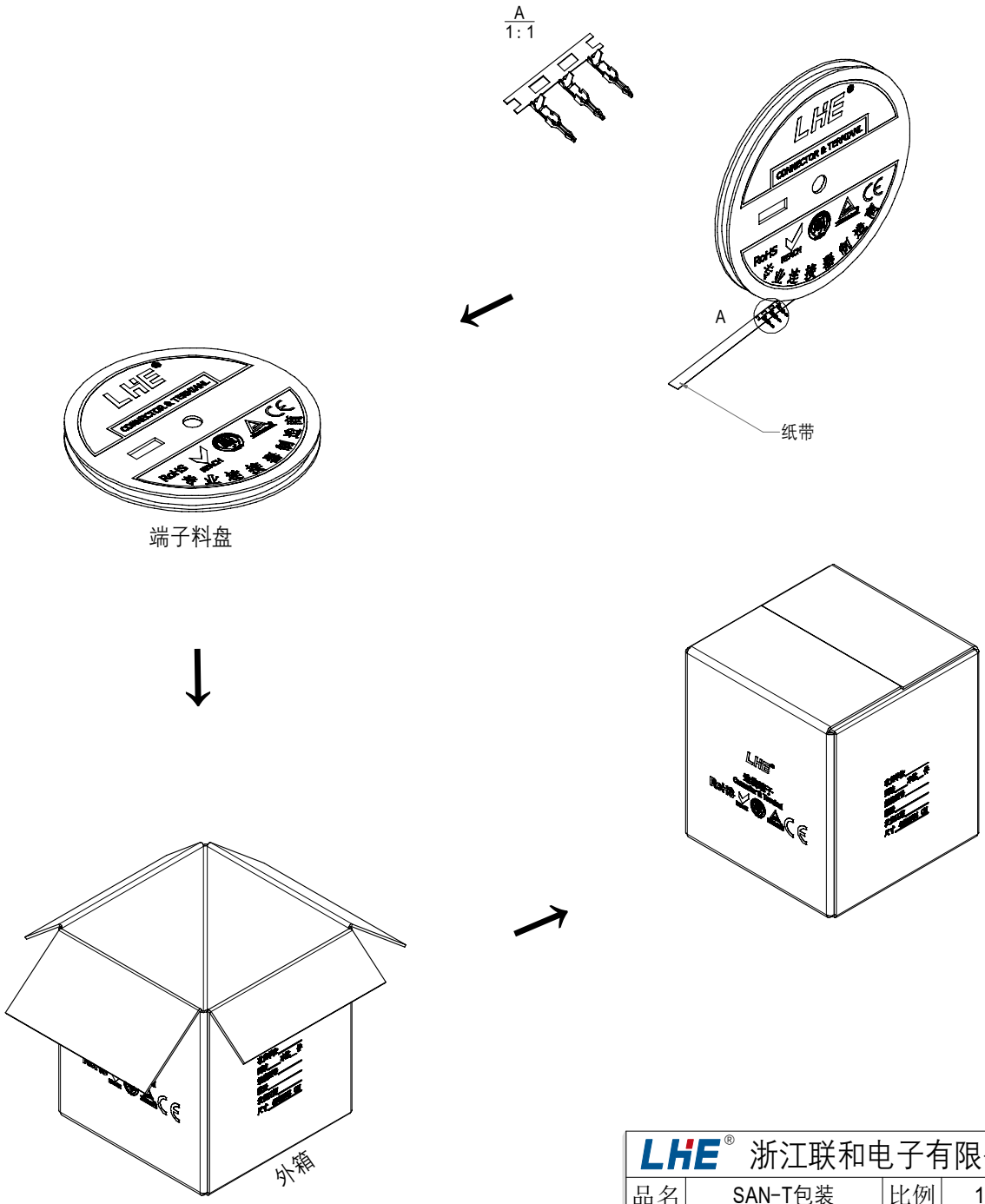

注释:
1. 产品尺寸请参照SAN-T图纸.
2. 此示意图为产品出料方式进行说明.
3. 胶带、PE袋未在图纸中体现,请以实物为准.

Part No.	Description	Qty/reel	Reel/caton
B2001-TP	SAN-T11	10000pcs	23/Reel
B2001-T12P	SAN-T12	10000pcs	23/Reel
B2001-T13P	SAN-T13	10000pcs	23/Reel

LHE® 浙江联和电子有限公司			
品名	SAN-T包装	比例	1:10
料号	B2001-T包装	未注公差(mm)	
图号	LHE\GC-9	>0~3	±0.12
材料	/	>3~18	±0.15
制图	吴娥金 2022-10-30	>18~50	±0.3
审核	陈浙海 2022-10-30	>50~120	±0.5
批准	季育文 2022-10-30	X°	±3°
视角		X.X°	±0.5°

项目 Item	测试条件 Test Condition	规格要求 Requirement	
1. 压着部位抗拉强度 Crimping Pull Out Force	在试验装置夹头中固定测试样品，在连接的轴线方向施加拉力；速度不大于25mm/min。 Fix the crimped terminal, apply axial pull out force on the wire at the speed rate of not more 25mm/min. 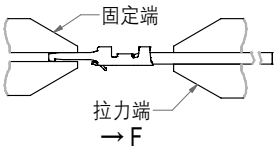	AWG.24#	≥30N
		AWG.26#	≥20N
		AWG.28#	≥10N
		AWG.30#	≥8N
2. 壳体/端子固定力 Terminal/Housing Retention Force	固定连接器或测力计，在连接器轴线方向施加规定的拉力；速度不大于25mm/min。 Apply axial pull out force at the speed rate of not more 25mm/min on the pin assembled in the housing. 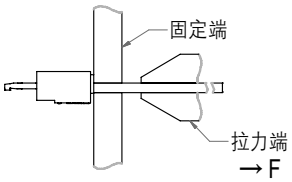	≥10N	
3. 针的固定力 Pin Retention Force	固定连接器或测力计，在连接器轴线方向对针施加规定的推力；速度不大于25mm/min。 Apply axial push out force at the speed rate of not more 25mm/minute on the terminal assembled in the base.	/	
4. 可焊性 Solderability	把测试样品需要焊接的部位浸入焊锡炉中(锡炉温度245℃±5℃)2±0.5秒钟。 Soldering time: 2±0.5 sec Solder Temperature:245℃±5℃	上锡率≥90% 90% of immersed area must show no voids,pin holes	
5. 耐焊接热 Resistance to Soldering Heat	把测试样品需要焊接的部位浸入焊锡炉中(锡炉温度260℃)；2±0.5秒钟后，在正常的条件下恢复1小时。 Soldering time: 2±0.5 sec Solder Temperature:260℃	外观 Appearance	无损伤 No Damage
6. 耐高温 Heat Resistance	连接器配合后，于+105℃±2℃的空气中放置96小时，然后再回到室温中放置1~2小时测定 Mated connectors are exposed to a temperature of +105℃±2℃ for 96 hours.	外观 Appearance	无损伤 No Damage
7. 耐低温 Clod Resistance	连接器配合后，于-25℃±2℃的空气中放置96小时，然后再回到室温中放置1~2小时测定 Mated connectors are exposed to a temperature of -25℃±2℃ for 96 hours.	接触电阻 Contact Resistance LLCR	/
8. 温度上升 Temperature Rise	插合连接器，通以最大允许电流。 Carring rated current load.	温度最大上升 Temperature Rise	≤30℃
9. 恒定湿热 Humidity	温度 Temperature: 40±2℃ 相对湿度 Relative Humidity: 90%~95% 搁置时间 Duration: 96h, 取出恢复2小时后检查	外观 Appearance	无损伤 No Damage
10. 温度循环 Temperature cycle	把测试样品放入高低温试验箱中,按下列步骤调试温度: a)在-25℃±2℃的恒温条件下放置0.5小时; b)在+105℃±2℃的恒温条件下放置0.5小时; 从a)到b)为一个循环周期,共进行5个循环。恢复1h后检查。 状态转换时间不多于1小时。 Mated connectors are exposed to 5 cycles of: a)-25℃±2℃ 0.5hour b)+105℃±2℃ 0.5hour	耐电压 Dielectric Strength	800V
		绝缘电阻 Insulation Resistance	≥1000MΩ
11. 机械寿命 Repeated insertion/withdrawal	以每分钟插拔10次的速率，插拔50次。 When mated up to 50 cycles repeatedly by the rate of 10 cycles per minute.	接触电阻 Contact Resistance LLCR	/
12. 机械振动 Vibration	插合连接器，串联在一直流电源上，电流100mA; 并模拟正常工作状态，振频为10~55Hz、振幅1.5mm; 55~500Hz、加速度50m/s², 每一轴线扫频循环次数10次、2小时。 Frequency: 10~55Hz Amplitude: ±1.5mm Frequency: >55~500Hz Acceleration: 50m/s² Duration: 2 hours in each X,Y,Z axes	外观 Appearance	无损伤 No Damage
		接触电阻 Contact Resistance LLCR	/
		中断 Intermittence	≤1μ sec

项目 Item	测试条件 Test Condition	规格要求 Requirement
13. 外观 Appearance	目测 Visual by eye 视力 Light: >1.0 照明 Lamp: 200~300Lx 目测距离 Space: 0.3~0.5m	1.塑料件表面应无明显疤痕、凹陷、开裂及影响使用的变形。 Plastic part:smooth and flat surface without discolor,broken,crack distortion defects is acceptable. 2.金属件表面无锈蚀、氧化、无明显的机械损伤等缺陷。 Metal part:btight and even surface without rust,oxide, fog and obvious physical damage defects is acceptable. 3.导线表面清洁、无破损等缺陷，印字及标志清晰。 Wire:clearing surface without discolor,broken defects,indistinct words and mark is acceptable.
14. 盐雾 Salt Spray	把先冲后镀*的测试样品从试验箱顶悬挂下来，采用浓度为5%±1(质量百分比)的氯化钠溶液，连续雾化16小时，试验后用流动的蒸馏水轻轻洗去表面沉积物。在常温常驻湿条件下恢复1~2小时。 16 hour exposure to a saltspray from the 5%±1 solution.	外观无损伤(五金件应无露出底金属的严重锈蚀；使用预镀的型材，其落料面允许有不影响其性能的轻微腐蚀。) Appearance:No Damage(No erosion with material exposed.And with plating material, slight erosion on the cutting surface acceptable)
15. 接触电阻 Contact Resistance	插合连接器,用小功率电路进行测试。 Mate connectors,measure by dry circuit.	/ (Initial value)
16. 绝缘电阻 Insulation Resistance	在相邻接触件之间或地线之间，用500V DC电压进行测试。 Apply 500V DC between adjacent terminal or ground.	≥1000MΩ
17. 耐电压 Dielectric Strength	相邻接触件之间或地线之间施加50Hz 800V AC(有效值)，漏电流1mA的电压作用，时间1min。 Mate connectors, apply 800V AC for 1 minute between adjacent terminal or ground.	无击穿和飞弧现象 No Breakdown
18. 插入力与拔出力 Insertion and Withdrawal Force	单PIN相配的接触器以1mm/s~5mm/s的速度沿接插器轴线方向插入和拔出。 Insertion and withdraw single contact at the speed rate of 1mm/s~5mm/s. 相配的连接器以1mm/s~5mm/s的速度沿接插器轴线方向插入和拔出。 Insertion and withdraw connectors at the speed rate of 1mm/s~5mm/s.	极数 Poles / 插入力(最大值N) Insertion(N Max) 1st / 拔出力(最小值N) Withdrawal(N Min) 1st 1

* 先冲后镀为定制端子。常规端子为先镀后冲，无法通过盐雾试验。

制订 Edit: 吴晓金 日期 DATE: 2022-10-30

审核 Check: 季育文 日期 DATE: 2022-10-30

批准 Approval: 陈浙海 日期 DATE: 2022-10-30

无铅回流焊要求 Pb-free reflow profile requirements

参数 Parameter	参考 Reference	规格 Specification
平均温度梯度预热 Average Temperature Gradient Preheating		2.5℃/s
浸泡时间 Soak time	tsoak 2-3	minutes
150℃以上时间 Time above 150℃	T1	60s
180℃以上时间 Time above 180℃	T2	50s
250℃以上时间 Time above 250℃	T3	2±0.5s
焊接温度 Peak temperature in reflow	Tpeak	255℃(-0/+5℃)
温度梯度的冷却 Temperature gradient in cooling		Max -5℃/s

温度条件图 TEMPERATURE CONDITION GRAPH

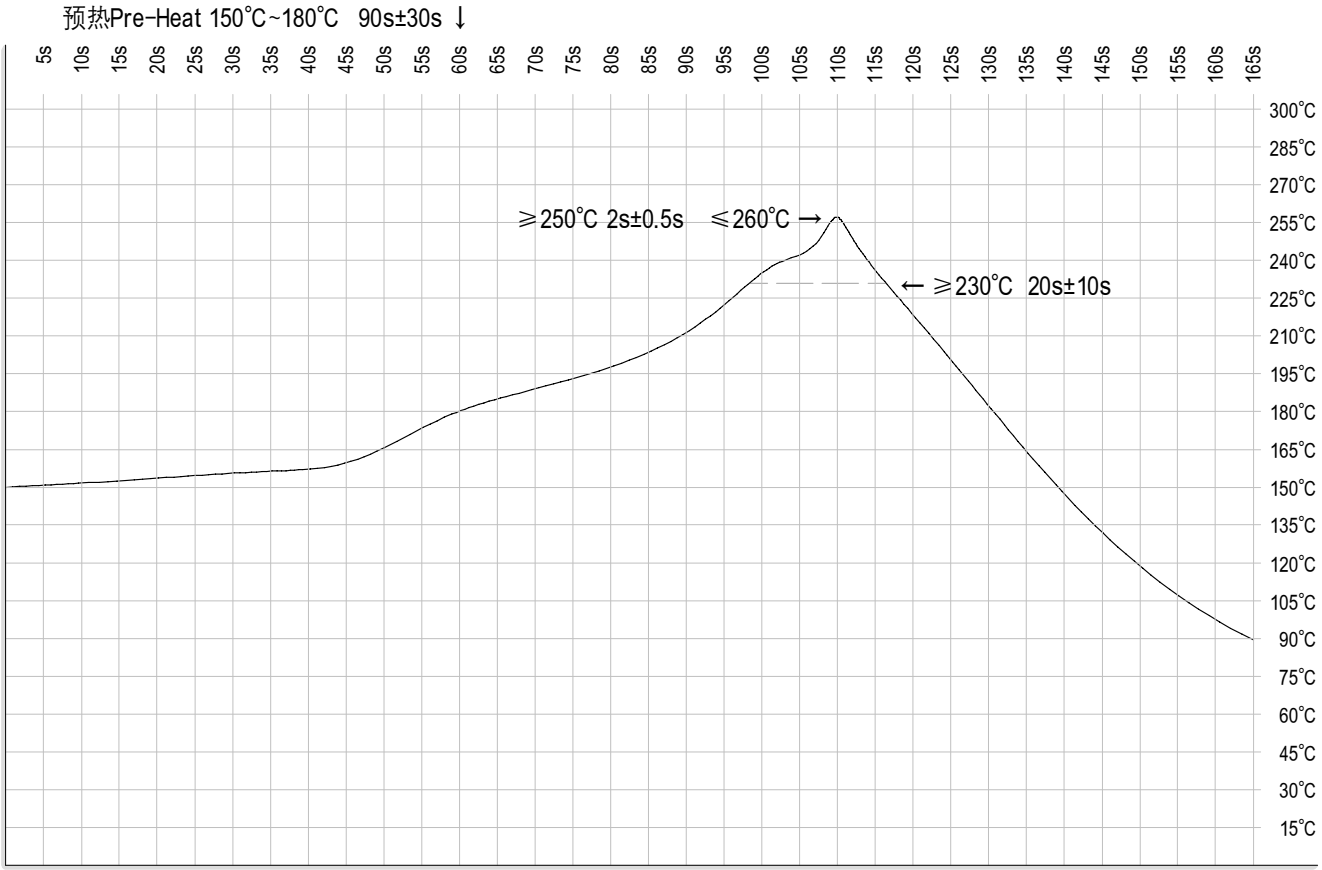

注: 对耐热性的最低要求, 是在回流焊中使用空气对流的传热方法评估焊接部件。 该曲线图表明需要达到规定的空气温度, 而实际过程很大程度上取决于回流焊装置。

Note: The minimum required heat resistance of the section is to evaluate the welded components. Heat transfer method is used for hot air convection in reflow welding. The actual air temperature used to achieve the specified profile depends largely on the reflux device.

浙江联和电子有限公司

产品性能测试报告

品名 (DESCRIPTION)	SAN	测定者 (Inspector)	吴智原	测定条件 (Test Condition)	温度: 22℃ (Temperature)
料号 (MODEL NO.)	B2001	日期 (Date)	2022. 03. 27		湿度: 65% (Humidity)

试验项目 (Test Title)	规格 (Specification)		测定值(Data)					COM
			X1	X2	X3	X4	X5	
端子和胶壳的固定力 (Terminal Retention in housing)	10N Min		21.5	19.5	18.5	19	19	ok
盐雾试验 (Salt spray)	雾化16小时，后镀端子不能有腐蚀现象 (Spray time:16 hours，terminals stamping then plating must not corrode)		PASS	PASS	PASS	PASS	PASS	ok
	接触电阻 (Contact Resistance)	/	/	/	/	/	/	/
温度循环 (Temperature cycling)	外观 (Appearanc)	无损伤 (No damage)	PASS	PASS	PASS	PASS	PASS	ok
	接触电阻 (Contact Resistance)	/	/	/	/	/	/	/
	绝缘电阻 (Insulation Resistance)	1000MΩ Min	PASS	PASS	PASS	PASS	PASS	ok
	耐电压 (Dielectric Withstanding Voltage)	800V,AC/minute	PASS	PASS	PASS	PASS	PASS	ok

浙江联和电子有限公司
ZHEJIANG LIANHE ELECTRONICS CO.,LTD.

可 靠 性 试 验 报 告
RELIABILITY TEST REPORT

日期：2022-03-27

针焰实验(Needle flame experiment)

测试目的(Test Purposes)	确定AB11069W-S16-10产品在针焰条件下是否符合标准要求 Determine if the AB11069W-S16-10 Does the product meet the standard requirements under the condition of needle flame
测试条件(Test Conditions)	温度35±2℃ Temperature 35 ± 2 ℃;
测试方法(Test Method)	对产品施加试验火焰持续时间为12s。火焰高度12mm±1mm The test flame was applied to the product for 12 s. Flame height 12 mm ± 1 mm
参照标准(With Reference to	GB/T5169.5-2008
判定标准(Test Standard)	a.试验样品无火焰和灼热，并且规定的铺底层或包装绢纸没有起燃 b.在移开针焰后，试验样品和周围的零部件的火焰或灼热在30s之内熄灭，即tb＜30s,而且周围的零部件没有完全烧毁，以及规定的铺底层或包装绢纸没有起燃。 a. The test sample has no flame and heat, and the specified bedding or wrapping paper does not ignite b. After removing the needle flame, the flame or burning heat of the test sample and the surrounding parts will be extinguished within 30s, i.e. TB < 30s, and the surrounding parts are not completely burnt out, and the specified underlay or wrapping silk paper does not ignite
测试设备(Test Equipment)	针焰试验机 Needle flame testing machine
测试程序（Test Program）	外观检验→固定样品→试验启动 →观察→记录起火时间

测试结果(The test results)

测试图片Test Picture

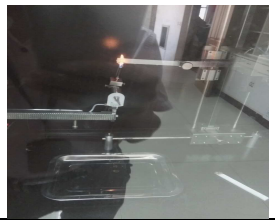

项次 Items	1	2	3	4	5	备注
第一组 group1	无起燃	无起燃	无起燃	无起燃	无起燃	/
第二组 group2	无起燃	无起燃	无起燃	无起燃	无起燃	/
结果results	OK	OK	OK	OK	OK	/

结果判定(The results determine)

样品数量 The Number of Samples 8PCS	合格数 The Number of competency	10	结 果Results OK
	不合格数Unqualified	0	
	外观Appearances	OK	

核 准 (Approved) :陈 浙 海　　测 试 人 (Testing Person) :玉夫

浙江联和电子有限公司
ZHEJIANG LIANHE ELECTRONICS CO.,LTD.

可 靠 性 试 验 报 告

RELIABILITY TEST REPORT

日期：2022-03-27

灼热丝实验(Glow wire experiment)

测试目的(Test Purposes)	确定AB11069W-S16-10灼热丝材料产品在灼热丝条件下是否符合标准要求 Determine if the AB11069W-S16-10 Does the product meet the standard requirements under the condition of glow wire
测试条件(Test Conditions)	灼热丝起燃温度(GWIT)记录值为起始温度加25K(对于900℃和930℃则是30K,960℃记为GWIT:>960/厚度) Gwire ignition temperature(GWIT)recorded value is the starting temperature plus 25K(for 900℃ and 930℃ is 30K,960℃ is GWIT:>960 / thickness)
测试方法(Test Method)	施加试验火焰持续时间为30s。试验温度750℃ The test flame duration was 30 s. Test temperature: 750 ℃
参照标准(With Reference to	根据GB/T 5169.12-2006及GB/T 5169.13-2013执行.
判定标准(Test Standard)	试验样条无火焰，并且规定的铺底层或包装绢纸没有起燃。 The test sample has no flame and heat, and the specified bedding or wrapping paper does not ignite
测试设备Test Equipment）	灼热丝试验仪 Glow-wire tester
测试程序（Test Program）	外观检验→固定样条→试验启动 →观察→记录起火时间

测试图片Test Picture

测试结果(The test results)

材料规格	试片尺寸(长X宽X厚) 单位:mm	起始温度(℃)	样品	起燃时间(Ti) 单位:秒	熄灭时间(Te) 单位:秒	现象记录	GWIT 判定:PASS或FAIL	GWFI 判定:PASS或FAIL
A66V0 002	60X60X2.5	750	第1个	不起燃	/	不起燃,无滴落	PASS (GWIT:775/2.5)	PASS (GWFI:750/2.5)
			第2个	不起燃	/	不起燃,无滴落		
			第3个	不起燃	/	不起燃,无滴落		
A66V0 002	60X60X2.5	775	第1个	不起燃	/	不起燃,无滴落	FALL	PASS (GWFI:775/2.5)
			第2个	不起燃	/	不起燃,无滴落		
			第3个	8	26	接触后很快就起燃,熔融但无滴落,起燃后26S熄灭		
A66V0 002	60X60X2.5	800	第1个	6	32	接触后很快就起燃,熔融但无滴落,起燃后32S熄灭	FALL	PASS (GWFI:800/2.5)
			第2个	5	31	接触后很快就起燃,熔融但无滴落,起燃后28S熄灭		
			第3个	6	33	接触后很快就起燃,熔融但无滴落,起燃后33S熄灭		

测试须知(The test requirements)

1.灼热丝起燃温度(GWIT)记录值为起始温度加25K(对于900℃和930℃则是30K，960℃记为GWIT:>960/厚度)：
2.产品在移开灼热丝之后持续燃烧的时间≤30s，即Te≤Ta（施加时间）+30S，并且包装娟纸没有起燃，
则灼热丝可燃性指数（GWFI）即为PASS，记录为GWFI:温度/厚度：
3.本实验灼热丝Ta(施加时间)为30S，则Te≤60S
4.如果3个其中有1个不合格则最终结果为不合格：.

核 准 (Approved)：陈 浙 海　　测 试 人 (Testing Person)：玉夫

Component - Plastics

File Number: E331274

Celanese (Suzhou) Engineering Plastics Co Ltd
N. 155 Song Bei Road, Suzhou Industrial Park, Suzhou Jiangsu 215024 CN

FRIANYL: A3 RV0 (a)(b)(f2)

Polyamide 66 (PA66), pellets, unfilled

(a) - Virgin and regrind up to 50% by weight inclusive, have the same basic material characteristics.
(b) - Virgin and regrind up to 100% by weight inclusive, have the same basic characteristics with respect to flammability.
(f2) - Subjected to one or more of the following tests: Ultraviolet Light, Water Exposure or Immersion in accordance with UL 746C, where the acceptability for outdoor use is to be determined by UL.

Flammability	Value	Test Method
Flame Rating		UL 94 IEC 60695-11-10, -20
0.25 mm, ALL	V-0	
0.38 mm, ALL	V-0	
0.75 mm, ALL	V-0	
1.5 mm, ALL	V-0	
3.0 mm, ALL	V-0	
Glow Wire Flammability Index		IEC 60695-2-12
0.75 mm	960 °C	
1.5 mm	960 °C	
3.0 mm	960 °C	
Glow Wire Ignition Temperature		IEC 60695-2-13
0.75 mm	775 °C	
1.5 mm	775 °C	
3.0 mm	775 °C	
Electrical	**Value**	**Test Method**
Hot-wire Ignition (HWI)		UL 746
0.25 mm	PLC 4	
0.38 mm	PLC 4	
0.75 mm	PLC 4	
1.5 mm	PLC 4	
3.0 mm	PLC 3	
High Amp Arc Ignition (HAI)		UL 746
0.25 mm	PLC 1	
0.38 mm	PLC 1	
0.75 mm	PLC 0	
1.5 mm	PLC 0	
3.0 mm	PLC 0	
Comparative Tracking Index (CTI)	PLC 0	UL 746
Dielectric Strength	25 kV/mm	ASTM D149 IEC 60243-1
High Voltage Arc Tracking Rate (HVTR)	PLC 0	UL 746
Inclined-Plane Tracking (1.0 kV)	60 min	ASTM D2303
Volume Resistivity	1.0E+13 ohms·cm	ASTM D257 IEC 60093
Arc Resistance	PLC 5	ASTM D495

Form Number: E331274-103610472

UL and the UL logo are trademarks of UL LLC Copyright © 2018 All Rights Reserved. | www.ul.com

Report Date: 6/22/2009
Last Revised: 2018-02-12

ANSI/UL 94 small-scale test data does not pertain to building materials, furnishings and related contents. ANSI/UL 94 small-scale test data is intended solely for determining the flammability of plastic materials used in the components and parts of end-product devices and appliances, where the acceptability of the combination is determined by UL.

Component - Plastics

File Number: E331274

Thermal	Value	Test Method
RTI Elec		UL 746
0.25 mm	65.0 °C	
0.38 mm	130 °C	
0.75 mm	130 °C	
1.5 mm	130 °C	
3.0 mm	130 °C	
RTI Imp		UL 746
0.25 mm	65.0 °C	
0.38 mm	105 °C	
0.75 mm	105 °C	
1.5 mm	105 °C	
3.0 mm	105 °C	
RTI Str		UL 746
0.25 mm	65.0 °C	
0.38 mm	115 °C	
0.75 mm	120 °C	
1.5 mm	120 °C	
3.0 mm	120 °C	
Physical	**Value**	**Test Method**
Dimensional Stability	0.0 %	ASTM D1042 ISO 2796
Outdoor Suitability	f2	UL 746C

Notice of Disclaimer

By accessing this Yellow Card data information sheet and the database from which this information was generated (the "Yellow Card"), the user acknowledges and accepts the terms and conditions upon which this Yellow Card is made available. This Yellow Card, the database from which it was generated, and all related materials, support, and services, are made available by UL for use only by permission and "as is", without any representation or warranty of any kind, express or implied, including but not limited to any implied warranties of merchantability, fitness for a particular purpose or that the products identified in this Yellow Card will satisfy the user's requirements. UL cannot and does not warrant that the data contained in this Yellow Card is current, accurate, or complete. The user must independently confirm the conformance of any product to the applicable standards or requirements with the manufacturer of that product. Permission to access this Yellow Card may be withdrawn at any time by UL in its sole discretion. The identification of products and companies on this Yellow Card does not in any way imply endorsement of those products or companies by UL. UL does not assume and expressly disclaims, liability to any person for any loss or damage (including lost profits, lost savings, or any indirect, special, incidental, consequential or punitive damages whether or not UL has been advised of the possibility of such damages) arising out of, or in connection with, the use of this Yellow Card regardless of the cause or causes of such loss or damage.

Form Number: E331274-103610472

UL and the UL logo are trademarks of UL LLC Copyright © 2018 All Rights Reserved. | www.ul.com

Report Date: 6/22/2009
Last Revised: 2018-02-12

ANSI/UL 94 small-scale test data does not pertain to building materials, furnishings and related contents. ANSI/UL 94 small-scale test data is intended solely for determining the flammability of plastic materials used in the components and parts of end-product devices and appliances, where the acceptability of the combination is determined by UL.

UL Product iQ™

ECBT2.E364711 - Connectors for Use in Data, Signal, Control and Power Applications - Component

Connectors for Use in Data, Signal, Control and Power Applications - Component

See General Information for Connectors for Use in Data, Signal, Control and Power Applications - Component

ZHEJIANG LIANHE ELECTRONIC CO LTD E364711
Chuangxin Road, YueQing Bay Port Zone
Yueqing, Zhejiang 325600 CHINA
Connector, Model(s) 1.58-LHE f/b 2 , f/b 1 thru 12, f/b A2 or AW., 1.58-LHE f/b 2 thru 6, f/b A2 or AW

Connector, Model(s) 1.58-LHE followed by 2, followed by 1 thru 12, followed by A(T).

Connector, Model(s) 1.58-LHE, f/b 2 thru 6 , f/b A(T)., 1.58-LHE, f/b 2 thru 6, f/b Y(T), 1.58-LHE, f/b 2, f/b 1 thru 12 , f/b Y(T)., 2510-LHE f/b 2 , f/b 1 thru 12, f/b A2 or AW, 2510-LHE f/b 2 thru 6, f/b A2 or AW

Connector, Model(s) 2510-LHE followed by 2, followed by 1 thru 12, followed by A(T)

Connector, Model(s) 2510-LHE, f/b 2 thru 6 , f/b A(T), 2510-LHE, f/b 2 thru 6, f/b Y(T), 2510-LHE, f/b 2, f/b 1 thru 12 , f/b Y(T), 5.08-LHE f/b 2 , f/b 1 thru 12, f/b A2 or AW, 5.08-LHE f/b 2 thru 6, f/b A2 or AW

Connector, Model(s) 5.08-LHE followed by 2, followed by 1 thru 12, followed by A(T)

Connector, Model(s) 5.08-LHE, f/b 2 thru 6 , f/b A(T), 5.08-LHE, f/b 2 thru 6, f/b Y(T), 5.08-LHE, f/b 2, f/b 1 thru 12 , f/b Y(T), 51005-LHE f/b 2 , f/b 1 thru 12, f/b A2 or AW, 51005-LHE f/b 2 thru 6, f/b A2 or AW

Connector, Model(s) 51005-LHE followed by 2, followed by 1 thru 12, followed by A(T)

Connector, Model(s) 51005-LHE, f/b 2 thru 6 , f/b A(T), 51005-LHE, f/b 2 thru 6, f/b Y(T), 51005-LHE, f/b 2, f/b 1 thru 12 , f/b Y (T), 51006-LHE f/b 2 , f/b 1 thru 12, f/b A2 or AW, 51006-LHE f/b 2 thru 6, f/b A2 or AW

Connector, Model(s) 51006-LHE followed by 2, followed by 1 thru 12, followed by A(T)

Connector, Model(s) 51006-LHE, f/b 2 thru 6 , f/b A(T), 51006-LHE, f/b 2 thru 6, f/b Y(T), 51006-LHE, f/b 2, f/b 1 thru 12 , f/b Y (T), 5102-LHE f/b 2 , f/b 1 thru 12, f/b A2 or AW, 5102-LHE f/b 2 thru 6, f/b A2 or AW

Connector, Model(s) 5102-LHE followed by 2, followed by 1 thru 12, followed by A(T)

Connector, Model(s) 5102-LHE, f/b 2 thru 6 , f/b A(T), 5102-LHE, f/b 2 thru 6, f/b Y(T), 5102-LHE, f/b 2, f/b 1 thru 12 , f/b Y(T), 5240-LHE f/b 2 , f/b 1 thru 12, f/b A2 or AW, 5240-LHE f/b 2 thru 6, f/b A2 or AW

Connector, Model(s) 5240-LHE followed by 2, followed by 1 thru 12, followed by A(T)

Connector, Model(s) 5240-LHE, f/b 2 thru 6 , f/b A(T), 5240-LHE, f/b 2 thru 6, f/b Y(T), 5240-LHE, f/b 2, f/b 1 thru 12 , f/b Y(T), 5500-LHE f/b 2 , f/b 1 thru 12, f/b A2 or AW, 5500-LHE f/b 2 thru 6, f/b A2 or AW

Connector, Model(s) 5500-LHE followed by 2, followed by 1 thru 12, followed by A(T)

Connector, Model(s) 5500-LHE, f/b 2 thru 6 , f/b A(T), 5500-LHE, f/b 2 thru 6, f/b Y(T), 5500-LHE, f/b 2, f/b 1 thru 12 , f/b Y(T), 5557 followed by 2 thru 6, followed by A(T), 5557 followed by 2 thru 6, followed by A2 or AW, 5557 followed by 2 thru 6, followed by Y(T)

Connector, Model(s) 5557 followed by 2, followed by 1 thru 12, followed by A(T).

Connector, Model(s) 5557 followed by 2, followed by 1 thru 12, followed by A2 or AW

Connector, Model(s) 5557 followed by 2, followed by 1 thru 12, followed by Y(T)

Connector, Model(s) 5559-LHE f/b 2 , f/b 1 thru 12, f/b A2 or AW, 5559-LHE f/b 2 thru 6, f/b A2 or AW

Connector, Model(s) 5559-LHE followed by 2, followed by 1 thru 12, followed by A(T).

Connector, Model(s) 5559-LHE, f/b 2 thru 6 , f/b A(T), 5559-LHE, f/b 2 thru 6, f/b Y(T), 5559-LHE, f/b 2, f/b 1 thru 12 , f/b Y(T), 5566-LHE f/b 2 , f/b 1 thru 12, f/b A2 or AW, 5566-LHE f/b 2 thru 6, f/b A2 or AW

Connector, Model(s) 5566-LHE followed by 2, followed by 1 thru 12, followed by A(T)

Connector, Model(s) 5566-LHE, f/b 2 thru 6 , f/b A(T), 5566-LHE, f/b 2 thru 6, f/b Y(T), 5566-LHE, f/b 2, f/b 1 thru 12 , f/b Y(T), 5569-LHE f/b 2 , f/b 1 thru 12, f/b A2 or AW, 5569-LHE f/b 2 thru 6, f/b A2 or AW

Connector, Model(s) 5569-LHE followed by 2, followed by 1 thru 12, followed by A(T)

Connector, Model(s) 5569-LHE, f/b 2 thru 6 , f/b A(T), 5569-LHE, f/b 2 thru 6, f/b Y(T), 5569-LHE, f/b 2, f/b 1 thru 12 , f/b Y(T), 5600-LHE f/b 2 , f/b 1 thru 12, f/b A2 or AW, 5600-LHE f/b 2 thru 6, f/b A2 or AW

Connector, Model(s) 5600-LHE followed by 2, followed by 1 thru 12, followed by A(T)

Connector, Model(s) 5600-LHE, f/b 2 thru 6 , f/b A(T), 5600-LHE, f/b 2 thru 6, f/b Y(T), 5600-LHE, f/b 2, f/b 1 thru 12 , f/b Y(T), 63080-LHE f/b 2 , f/b 1 thru 12, f/b A2 or AW, 63080-LHE f/b 2 thru 6, f/b A2 or AW

Connector, Model(s) 63080-LHE followed by 2, followed by 1 thru 12, followed by A(T)

Connector, Model(s) 63080-LHE, f/b 2 thru 6 , f/b A(T), 63080-LHE, f/b 2 thru 6, f/b Y(T), 63080-LHE, f/b 2, f/b 1 thru 12 , f/b Y (T), B2502 followed by 2 thru 16, followed by Y(T), BH3.5-2A(T), BH3.5-2Y(T), MX3.0 followed by 2 thru 12, followed by A(T), MX3.0 followed by 2 thru 12, followed by A2 or AW, MX3.0 followed by 2 thru 12, followed by Y(T)

Connector, Model(s) MX3.0 followed by 2, followed by 1 thru 12, followed by A(T).

Connector, Model(s) MX3.0 followed by 2, followed by 1 thru 12, followed by A2 or AW

Connector, Model(s) MX3.0 followed by 2, followed by 1 thru 12, followed by Y(T)

Connector, Model(s) PA-LHE f/b 2, f/b 1 thru 12, f/b Y(T), PA-LHE followed by 2 thru 12, followed by A(T)

Connector, Model(s) PA-LHE followed by 2 thru 12, followed by A2 or AW

Connector, Model(s) PA-LHE followed by 2 thru 12, followed by Y(T)

Connector, Model(s) PA-LHE followed by 2, followed by 1 thru 12, followed by A(T)

Connector, Model(s) PA-LHE followed by 2, followed by 1 thru 12, followed by A2 or AW

Connector, Model(s) PH, PHB, XHB, JC25, SCN followed by -2 thru -20, followed by Y(T), A, AW or AWD

Connector, Model(s) PHB followed by 2 thru 16, followed by Y(T). followed by 2 thru 16, followed by AWD, A, AW

Connector, Model(s) Series 1.25, 1254, 1255 followed by -2 thru -25, followed by Y(T), A or AW

Connector, Model(s) Series 5264 followed by -2 thru -16, followed by Y(T), A or AWD

Connector, Model(s) SM followed by -2 thru -18, followed by Y(T) or A(T)

Connector, Model(s) VH, 3.96 followed by -2 thru -16, followed by Y(T), A, AW or AWG

Connector, Model(s) XA-LHE f/b 2, f/b 1 thru 12, f/b Y(T), XA-LHE followed by 2 thru 12, followed by A(T)

Connector, Model(s) XA-LHE followed by 2 thru 12, followed by A2 or AW

Connector, Model(s) XA-LHE followed by 2 thru 12, followed by Y(T)

Connector, Model(s) XA-LHE followed by 2, followed by 1 thru 12, followed by A(T)

Connector, Model(s) XA-LHE followed by 2, followed by 1 thru 12, followed by A2 or AW

Connector, Model(s) XH followed by -2 thru -20, followed by Y(T), A, AW, AWGD, AWD or AWGDJ

Connector, Model(s) ZH followed by 2 thru 16, followed by AWD or A, ZH followed by 2 thru 16, followed by Y(T).

Model(s) 1.25, followed by -2 thru -16, followed by AB or AWB

Model(s) 51146 or FI-S, followed by -2 thru -16, followed by AB or AWB

Model(s) A5001, followed by -2 thru -7, followed by Y, Y(T), AD or AWD

Model(s) B2501-LHE, A2004-LHE, A4203-LHE, PHR-LHE, PHD-LHE, CH2.5-LHE, DF11-LHE, PHSD-LHE, A5001-LHE, 35155-LHE, 35156-LHE, 5195-LHE, 5196-LHE, followed by 2 thru 16, followed by Y(T)

Model(s) BHS-LHE, SMH250-LHE, SMH200-LHE, L6.2-LHE, 1806-LHE, 2060-LHE, 2541-LHE, JC15-LHE, XHD-LHE, followed by -2, followed by A(T), or Y(T)

Model(s) JWPF-LHE, B2541-LHE, NV-LHE, DV-LHE, SGN-LHE, SJN-LHE, SDN-LHE, SIN-LHE, 35150-LHE, 35151-LHE, 35180-LHE, 35182-LHE, 35524-LHE, 35965-LHE, RCY-LHE, LC-LHE, VR-LHE, SHJ-LHE, SHL-LHE, DF19-LHE, ACH-LHE, DF13-LHE, IL-Z-LHE, 51146-LHE, SATA-LHE, XSR-LHE, SUR-LHE, SUH-LHE, ZE-LHE, ZND-LHE, ZPD-LHE, A1502-LHE, SFH-LHE,51004-LHE, PUD-LHE, A20010-LHE, 35507-LHE, DF3-LHE, PND-LHE, RE-LHE,RA-LHE, RF-LHE or A3963, followed by -2 thru -15, followed by Y(T), YB(T) or YC(T), A, A-K, AW, AW-K, AD, AD-K, AWGD, AWGD-K, AQ, AQ-K, AWQ, AWQ-K, AD(BH) or AD(BH)-K.

Model(s) PH, followed by -2 thru -16, followed by AB or AWB

Model(s) PHB, SZN-LHE, SAN-LHE, JC20-LHE, EH-LHE, EI-LHE, EL-LHE, S-EL-LHE, followed by 2 thru 16, followed by AWD, A, AW

Model(s) PHB, SZN-LHE, SAN-LHE, JC20-LHE, EH-LHE, EI-LHE, EL-LHE, S-EL-LHE, followed by 2 thru 16, followed by Y(T)

Model(s) PHB, XH, XHB or XHBD, followed by -2 thru -16, followed by AB or AWB.

Model(s) RAST 5-LHE TAB HEADER ASSY , TH, Vertical, Cat. Nos. 1969738-LHE,1969740-LHE, 1971845-LHE, 1971846-LHE, 1971895-LHE, 1971896-LHE, 1971946-LHE thru 1971949-LHE, 1971954-LHE thru 1971957-LHE, 2232008-LHE thru 2232011-LHE, 2232000-LHE thru 2232003-LHE, 2232016-LHE thru 2232019-LHE, 1971962-LHE thru 1971965-LHE, 2232024-LHE thru 2232027-LHE, 2232289-LHE thru 2232292-LHE, 2232043-LHE thru 2232074-LHE, 2232298-LHE thru 2232301-LHE, 2232511-LHE, 2232532-LHE, 2232557-LHE, 2232559-LHE, 2232560-LHE, 2232562-LHE, 2232563-LHE, 2232565-LHE, 2232566-LHE, 2232568-LHE, 2232569-LHE, 2232571-LHE, 2232572-LHE, 2232574-LHE, 2232575-LHE, 2232577-LHE, 2232578-LHE, 2232580-LHE, 2232581-LHE, 2232583-LHE, 2232584-LHE, 2232586-LHE, 2232587-LHE, 2232589-LHE, 2232590-LHE, 2232592-LHE, 2232593-LHE, 2232595-LHE, 2232596-LHE, 2232598-LHE, 2232599-LHE, 2232601-LHE, 2232602-LHE, 2232604-LHE, 2232605-LHE, 2232607-LHE, 2232608-LHE, 2232611-LHE thru 2232682-LHE, 2292457-LHE, 2292458-LHE, may incorporate prefix and/or suffix number.), followed by -2 thru -7, followed by Y, Y(T), AD or AWD.

Model(s) SY, followed by -2, followed by Y, Y(T), A or A(T)

Model(s) SYP, SYR, BH4.0-LHE, A10001-LHE, A7501-LHE, A8001-LHE, C2541-LHE, C2542-LHE, D250R-LHE, D280K-LHE, D300R-LHE, D350R-LHE, D400B-LHE, D430R-LHE, D470G-LHE, D480J-LHE, D480K-LHE, D480N-LHE, D480Q-LHE, D520H-LHE, D520K-LHE, D520Q-LHE, D620G-LHE, D630J-LHE, D630N-LHE, D630Q-LHE, D700G-LHE, F001-LHE, F002-LHE, HIF3-LHE, MC100-LHE, MC100-LHE, ME020-LHE, ME010-LHE, F2541-LHE, D2301-LHE, 1719057-LHE, 1719059-1-LHE, P0011-LHE, P0012-LHE, P0013-LHE, C6001-LHE, D2201-LHE, D2202-LHE or P0001-LHE, followed by -2, followed by Y, Y(T), A or A(T).

Model(s) VL-LHE , YL-LHE, SL-LHE, FL-LHE, YHD200-LHE, HA-LHE, LGC-LHE, JR-LHE, SP-LHE, 5025-LHE, followed by 2, followed by 1 thru 12, followed by A(T), Y(T), A2 or AW

Model(s) VL-LHE, YL-LHE, SL-LHE, FL-LHE, YHD200-LHE, HA-LHE, LGC-LHE, JR-LHE, SP-LHE, 5025-LHE, followed by 2 thru 12, followed by A(T), Y(T), A2 or AW

Model(s) XHD, XHE or XHQ, followed by -2 thru -15, followed by Y(T), YB(T) or YC(T), A, A-K, AW, AW-K, AD, AD-K, AWGD, AWGD-K, AQ, AQ-K, AWQ, AWQ-K, AD(BH) or AD(BH)-K.

Model(s) ZH, followed by -2 thru -16, followed by AB or AWB

Model(s) ZHR-LHE, SH-LHE, GH-LHE, NH-LHE, C1251-LHE, DF14-LHE, 5501-LHE, 75416-LHE, 543-LHE, followed by 2 thru 16, followed by AWD or A

Model(s) ZHR-LHE, SH-LHE, GH-LHE, NH-LHE, C1251-LHE, DF14-LHE, 5501-LHE, 75416-LHE, 543-LHE, followed by 2 thru 16, followed by Y(T)

Marking: Company name or trademark LHE , model designation and the Recognized Component Mark, on the device or carton.

Last Updated on 2020-02-20

并不是所有出现在本数据库中的公司名称和产品都满足了UL 跟踪检验服务的要求。只有带有 UL 标志的产品，才应该被视为经过UL认证，并满足UL 跟踪检验服务的要求。注意查看产品上的标志。

UL 允许在线认证目录中所含材料的复制遵循以下条件：1.指南信息、装配、构造、设计、系统和/或认证（文件）必须在不篡改任何数据（或图纸）的情况下完整且无误导性地呈现。2."经 UL 允许从在线认证目录转载"声明必须出现在所摘取材料的邻近位置。此外，转载材料必须包含以下格式的版权声明： "© 2020 UL LLC"

产品认证证书

证书编号：CQC17134174484

发证日期：2021 年 01 月 20 日
有效期至：2025 年 08 月 31 日

委托人名称及注册地址	浙江联和电子有限公司 浙江省乐清市乐清湾港区乐商创业园
制造商名称及注册地址	浙江联和电子有限公司 浙江省乐清市乐清湾港区乐商创业园
生产企业名称及生产地址	浙江联和电子有限公司 浙江省乐清市乐清湾港区创新路 8 号
产品名称和系列、规格、型号	连接器聚酰胺 66(PA66) 型号见附件，材料名称：聚酰胺（PA66），材料牌号：A3RV0，全色， 球压:200℃, 灼热丝可燃性指数(GWFI):960/0.3, 灼热丝起燃温度(GWIT):960/0.3, 燃烧等级:V-0@0.3mm,CTI600, 红外光谱,差示扫描量热和热重分析见报告 00601-2020134003037
产品标准和技术要求	GB/T 5169.21-2017, GB/T 5169.12-2013, GB/T 5169.13-2013, GB/T 5169.16-2017, GB/T 4207-2012, GB/T 6040-2019, GB/T 19466.1-2004, GB/T 19466.2-2004, GB/T 19466.3-2004, ISO 11358-1:2014
认证模式	产品检测+获证后监督

上述产品符合 CQC13-036047-2009 认证规则的要求，特发此证。
证书有效期内本证书的有效性依据发证机构的定期监督获得保持。

可通过扫描下方二维码或登录国家认监委网站（www.cnca.gov.cn）查验证书信息

签发：

中国质量认证中心

CHINA QUALITY CERTIFICATION CENTRE 中国质量认证中心

http://www.cqc.com.cn　　中国・北京・南四环西路188号9区　100070　　电话：+86 10 83886666

C 0453132

Verification No.: CLZJ1411264692

VERIFICATION OF LVD COMPLIANCE

Applicant: Zhejiang Lianhe Electrical Co., Ltd.
Houyu village, Shifan town, Yueqing city, Zhejiang province, China.

Manufacturer: Same as applicant

Product Description: Connector Terminal

Model No: A1001, A1002, A1003, A1251, A1252, A1253, A1254, A1255, A1256, A1257, A1501, A1502, A1503, A2001, A2002, A2003, A2004, A2005, A2006, A2007, A2501, A2502, A2503, A2504, A2505, A2505, A2506, A2507, A2541, A2542, A2543, A2544, A2545, A3961, A3962, A3963, A3564, A5081, A5082, B1501, B1502, B2001, B2002, B2501, B2502, C01581, C01582, C1251, C2001, C2002, C2501, C2502, C2505, C2506, C3001, C3002, C3003, C3004, C3005, C3006, C3501, C3502, C3701, C3702, C4001, C4002, C4141, C4142, C4201, C4202, C4203, C4204, C4601, C4602, C4501, C4502, C4503, C4504, C5001, C5002, C5031, C5032, C6201, C6202, C6351, C6352, C6701, C6702, D2801, D2802, D2803, D4801, D4802, D4803, D4804, D6301, D6302, D6303

Sufficient samples of the product have been tested and found to be in conformity with

Test Standard: EN 60320-1:2001/A1:2007
EN 60529:1991/A1:2000

As shown in the
Test Report Number(s): TLZJ1411264692

Date of issue: November 27, 2014

Conclusion

This Verification of LVD Compliance has been granted to the applicant based on the results of tests, performed by laboratory of Global Testing Services Co., Ltd on sample of the above-mentioned product in accordance with the provisions of the relevant specific standards and the Low Voltage Directive 2014/35/EU. The CE marking as shown below can be affixed, under the responsibility of the manufacturer, after completion of an EC Declaration of Conformity and compliance with all relevant EC Directives. The affixing of the CE marking presumes in addition that conditions the conditions in annexes IIIand IV of the Directive are fulfilled.

Approved by: Hermann Weiher

For and on behalf of
Global Testing Services Co., Ltd

Global Testing Services Co., Ltd
E-mail:info@gts-lab.com http://www.gts-lab.com
Room 1501-1502, No. 520 Yishan Rd., Xuhui District, Shanghai, 200235 China

Copyright of this certificate is owned by Global Testing Services Co., Ltd and may not be reproduced other than in full and with the prior approval of the General Manager.

PRODUCT CERTIFICATION

CERTIFICATE NO.: CQC17134174484

Valid from: Jan.20,2021
Valid until: Aug.31,2025

NAME AND REGISTERED ADDRESS OF THE APPLICANT	Zhejiang Lianhe Electronics Co., Ltd. Yueshang Pioneer Park,Yueqingwan Area, Yueqing City, Zhejiang Province
NAME AND REGISTERED ADDRESS OF THE MANUFACTURER	Zhejiang Lianhe Electronics Co., Ltd. Yueshang Pioneer Park,Yueqingwan Area, Yueqing City, Zhejiang Province
NAME AND LOCATION OF THE FACTORY	Zhejiang Lianhe Electronics Co., Ltd. No. 8, Chuangxin Road, Yueqing Bay Port District, Yueqing City, Zhejiang Province
PRODUCT NAME, MODEL AND SPECIFICATION	Connector (PA66) See Annex , Material name: PA66, material grade: A3RV0, All color, Ball pressure:200℃, Glow-Wire Flammability Index(GWFI): 960/0.3, Glow-Wire Ignition Temperature(GWIT):960/0.3, Flammability:V-0@0.3mm, CTI600 , Infrared Analysis,Differential Scanning Calorimetry(DSC), Thermogravimetry (TG) to see report Ref.No: 00601-2020134003037
THE STANDARDS AND TECHNICAL REQUIREMENTS FOR THE PRODUCTS	GB/T 5169.21-2017, GB/T 5169.12-2013, GB/T 5169.13-2013, GB/T 5169.16-2017, GB/T 4207-2012, GB/T 6040-2019, GB/T 19466.1-2004, GB/T 19466.2-2004, GB/T 19466.3-2004, ISO 11358-1:2014
TYPE OF CERTIFICATION SCHEMES	Product Testing + Follow up Factory Inspection

This is to certify that the above mentioned product(s) complies with the requirements of certification rules of CQC13-036047-2009.

The validity of the certificate is subject to positive result of the regular follow up inspection by issuing certification body until the expiry date.

The certificate information is available through the QR code below or CNCA's website: www.cnca.gov.cn

SIGNATURE:

CHINA QUALITY CERTIFICATION CENTRE

http://www.cqc.com.cn Section 9, No.188, Nansihuan Xilu, Beijing 100070 P.R.China Tel: +86 10 83886666

C 0453132

IQNet®

THE INTERNATIONAL CERTIFICATION NETWORK

CERTIFICATE

CQC *has issued an IQNet recognized certificate that the organization:*

ZheJiang Lianhe Electronics Co.,Ltd.

Registered Address: Yueqing Bay Port Area, Yueqing City, Wenzhou City, Zhejiang Province, P.R.China
Operation Address: No.8 Innovation Road, Yueqing Bay Port Area, Yueqing City, Wenzhou City, Zhejiang Province, P.R.China

has implemented and maintains an

Environmental Management System

for the following scope:

Design and Production of Connector and Related Management Activities

which fulfils the requirements of the following standard:

GB/T 24001-2016 / ISO 14001:2015

Issued on: February 12, 2020

Expires on: February 11, 2023

Registration Number: **CN00120E30414R0S/3302**

This attestation is directly linked to the IQNet Partner's original certificate and shall not be used as a stand-alone document

Partner of IQNet

Alex Stoichitoiu
President of IQNet

Lu Mei
President of CQC

CQC

IQNet Partners*:
AENOR *Spain* AFNOR Certification *France* APCER *Portugal* CCC *Cyprus* CISQ *Italy*
CQC *China* CQM *China* CQS *Czech Republic* Cro Cert *Croatia* DQS Holding GmbH *Germany* EAGLE Certification Group *USA*
FCAV *Brazil* FONDONORMA *Venezuela* ICONTEC *Colombia* Inspecta Sertifiointi Oy *Finland* INTECO *Costa Rica*
IRAM *Argentina* JQA *Japan* KFQ *Korea* MIRTEC *Greece* MSZT *Hungary* Nemko AS *Norway* NSAI *Ireland*
NYCE-SIGE México PCBC *Poland* Quality Austria *Austria* RR *Russia* SII *Israel* SIQ *Slovenia*
SIRIM QAS International *Malaysia* SQS *Switzerland* SRAC *Romania* TEST St Petersburg *Russia* TSE *Turkey* YUQS *Serbia*

* The list of IQNet partners is valid at the time of issue of this certificate. Updated information is available under www.iqnet-certification.com

230920340938

中国认可
国际互认
检测
TESTING
CNAS L0599

检测报告

编号：SHAEC24005901604　　日期：2024 年 04 月 18 日　　第 1 页，共 11 页

客户名称：　浙江联和电子有限公司

客户地址：　浙江省乐清市乐清湾港区乐商创业园
浙江省乐清市乐清湾港区电子信息产业园红旗路 8 号

样品名称：　PA66 连接器

型号：　XHD-5A

客户参考信息：　见附件

以上样品及信息由客户提供。

SGS 工作编号：　TIC10202403261730301GRQ

样品接收时间：　2024 年 04 月 02 日

检测周期：　2024 年 04 月 02 日 ~ 2024 年 04 月 15 日

检测要求：　根据客户要求检测。

检测方法：　见后续页。

检测结果：　见后续页。

检测要求	结论
欧盟 RoHS 指令 2011/65/EU 附录 II 的修正指令(EU) 2015/863-铅、汞、镉、六价铬、多溴联苯 (PBB)、多溴二苯醚 (PBDE)、邻苯二甲酸二(2-乙基已基)酯 (DEHP)、邻苯二甲酸丁苄酯 (BBP)、邻苯二甲酸二丁酯 (DBP)和邻苯二甲酸二异丁酯 (DIBP)	符合
欧盟 RoHS 指令 2011/65/EU 附录 II 的修正指令(EU) 2015/863-铅、汞、镉和六价铬	符合

通标标准技术服务（上海）有限公司
授权签名

Jenny Lan 兰柳珍
批准签署人

scan to see the report
67D0D105

Unless otherwise agreed in writing, this document is issued by the Company subject to its General Conditions of Service printed overleaf, available on request or accessible at http://www.sgs.com/en/Terms-and-Conditions.aspx and, for electronic format documents, subject to Terms and Conditions for Electronic Documents at http://www.sgs.com/en/Terms-and-Conditions/Terms-e-Document.aspx. Attention is drawn to the limitation of liability, indemnification and jurisdiction issues defined therein. Any holder of this document is advised that information contained hereon reflects the Company's findings at the time of its intervention only and within the limits of Client's instructions, if any. The Company's sole responsibility is to its Client and this document does not exonerate parties to a transaction from exercising all their rights and obligations under the transaction documents. This document cannot be reproduced except in full, without prior written approval of the Company. Any unauthorized alteration, forgery or falsification of the content or appearance of this document is unlawful and offenders may be prosecuted to the fullest extent of the law. Unless otherwise stated the results shown in this test report refer only to the sample(s) tested.
Attention: To check the authenticity of testing /inspection report & certificate, please contact us at telephone: (86-755) 8307 1443, or email: CN.Doccheck@sgs.com

3rd Building,No.889 Yishan Road Xuhui District,Shanghai China 200233　t E&E (86-21) 61402553　f E&E (86-21)64953679　www.sgsgroup.com.cn
中国·上海·徐汇区宜山路889号3号楼　邮编: 200233　t HL (86-21) 61402594　f HL (86-21)61156899　e sgs.china@sgs.com

Member of the SGS Group (SGS SA)

SGS

检测报告

编号: NGBEC2200627404　　日期: 2022年04月20日　　第2页,共11页

检测结果：

检测样品描述：

样品编号	SGS样品ID	描述
SN1	NGB22-006274.001	白色塑料部分
SN2	NGB22-006274.002	银色金属部分

备注：

(1) 1 mg/kg = 0.0001%
(2) MDL = 方法检测限
(3) ND = 未检出 (< MDL)
(4) "-" = 未规定

RoHS指令2011/65/EU附录II的修正指令(EU) 2015/863

检测方法：　参考IEC 62321-4:2013+AMD1:2017, IEC 62321-5:2013, IEC 62321-7-2:2017, IEC 62321-6:2015和IEC 62321-8:2017，采用ICP-OES,UV-Vis和GC-MS进行分析。

检测项目	限值	单位	MDL	*001*
镉(Cd)	100	mg/kg	2	ND
铅(Pb)	1000	mg/kg	2	ND
汞(Hg)	1000	mg/kg	2	ND
六价铬 (Cr(VI))	1000	mg/kg	8	ND
多溴联苯(PBBs)之和	1000	mg/kg	-	ND
一溴联苯	-	mg/kg	5	ND
二溴联苯	-	mg/kg	5	ND
三溴联苯	-	mg/kg	5	ND
四溴联苯	-	mg/kg	5	ND
五溴联苯	-	mg/kg	5	ND
六溴联苯	-	mg/kg	5	ND
七溴联苯	-	mg/kg	5	ND
八溴联苯	-	mg/kg	5	ND
九溴联苯	-	mg/kg	5	ND
十溴联苯	-	mg/kg	5	ND
多溴二苯醚之和(PBDEs)	1000	mg/kg	-	ND
一溴二苯醚	-	mg/kg	5	ND
二溴二苯醚	-	mg/kg	5	ND
三溴二苯醚	-	mg/kg	5	ND
四溴二苯醚	-	mg/kg	5	ND
五溴二苯醚	-	mg/kg	5	ND

Unless otherwise agreed in writing, this document is issued by the Company subject to its General Conditions of Service printed overleaf, available on request or accessible at http://www.sgs.com/en/Terms-and-Conditions.aspx and, for electronic format documents, subject to Terms and Conditions for Electronic Documents at http://www.sgs.com/en/Terms-and-Conditions/Terms-e-Document.aspx. Attention is drawn to the limitation of liability, indemnification and jurisdiction issues defined therein. Any holder of this document is advised that information contained hereon reflects the Company's findings at the time of its intervention only and within the limits of Client's instructions, if any. The Company's sole responsibility is to its Client and this document does not exonerate parties to a transaction from exercising all their rights and obligations under the transaction documents. This document cannot be reproduced except in full, without prior written approval of the Company. Any unauthorized alteration, forgery or falsification of the content or appearance of this document is unlawful and offenders may be prosecuted to the fullest extent of the law. Unless otherwise stated the results shown in this test report refer only to the sample(s) tested .
Attention: To check the authenticity of testing /inspection report & certificate, please contact us at telephone: (86-755) 8307 1443, or email: CN.Doccheck@sgs.com

SGS-CSTC Standards Technical Services Co.,Ltd. Ningbo Branch Chemical Laboratory
No.1177, Lingyun Road, Hi-Tech Zone, Ningbo, Zhejiang, China 315040　t E&E (86-574)89070249　www.sgsgroup.com.cn
中国・浙江・宁波高新区凌云路1177号　邮编: 315040　t HL (86-574)89070271　t ML (86-574)89070242　sgs.china@sgs.com

Member of the SGS Group (SGS SA)

SGS

检测报告

编号: NGBEC2200627404　　日期: 2022年04月20日　　第3页,共11页

检测项目	限值	单位	MDL	001
六溴二苯醚	-	mg/kg	5	ND
七溴二苯醚	-	mg/kg	5	ND
八溴二苯醚	-	mg/kg	5	ND
九溴二苯醚	-	mg/kg	5	ND
十溴二苯醚	-	mg/kg	5	ND
邻苯二甲酸二丁酯 (DBP)	1000	mg/kg	50	ND
邻苯二甲酸丁苄酯(BBP)	1000	mg/kg	50	ND
邻苯二甲酸二(2-乙基己基)酯(DEHP)	1000	mg/kg	50	ND
邻苯二甲酸二异丁酯(DIBP)	1000	mg/kg	50	ND

备注：

(1) 最大允许极限值引用自RoHS指令(EU) 2015/863 。
(2) IEC 62321 系列等同于 EN 62321 系列
https://www.cenelec.eu/dyn/www/f?p=104:30:1742232870351101::::FSP_ORG_ID,FSP_LANG_ID:1258637,25。
(3) 2021年7月22号开始，DEHP, BBP, DBP 和 DIBP的限制适用于医疗器械，包括体外医疗器械，监控仪表，包括工业监测和控制仪器。

RoHS指令2011/65/EU附录II的修正指令(EU) 2015/863

检测方法：　参考IEC 62321-4:2013+AMD1:2017, IEC 62321-5:2013 和 IEC 62321-7-1:2015, 采用ICP-OES和UV-Vis 进行分析.

检测项目	限值	单位	MDL	002
镉 (Cd)	100	mg/kg	2	ND
铅(Pb)	1000	mg/kg	2	ND
汞 (Hg)	1000	mg/kg	2	ND
六价铬(Cr(VI))▾	-	μg/cm²	0.10	ND

备注：

(1) 最大允许极限值引用自RoHS指令(EU) 2015/863。
(2) IEC 62321 系列等同于 EN 62321 系列
https://www.cenelec.eu/dyn/www/f?p=104:30:1742232870351101::::FSP_ORG_ID,FSP_LANG_ID:1258637,25
(3) ▾ = a. 当六价铬的浓度高于0.13 μg/cm2时，样品为阳性，即含有六价铬；
b. 当六价铬的浓度为ND(低于0.10 μg/cm2)时，样品为阴性，即未检测到六价铬；
c. 当六价铬的浓度介于0.10 μg/cm2与0.13 μg/cm2之间时，无法直接判定是否检测到六价铬，因不同个体的样品表面差异可能会影响测定结果；
由于未获知样品的存储条件和生产日期，样品的六价铬测试结果仅能代表测试时样品含六价铬的状态。

Unless otherwise agreed in writing, this document is issued by the Company subject to its General Conditions of Service printed overleaf, available on request or accessible at http://www.sgs.com/en/Terms-and-Conditions.aspx and, for electronic format documents, subject to Terms and Conditions for Electronic Documents at http://www.sgs.com/en/Terms-and-Conditions/Terms-e-Document.aspx. Attention is drawn to the limitation of liability, indemnification and jurisdiction issues defined therein. Any holder of this document is advised that information contained hereon reflects the Company's findings at the time of its intervention only and within the limits of Client's instructions, if any. The Company's sole responsibility is to its Client and this document does not exonerate parties to a transaction from exercising all their rights and obligations under the transaction documents. This document cannot be reproduced except in full, without prior written approval of the Company. Any unauthorized alteration, forgery or falsification of the content or appearance of this document is unlawful and offenders may be prosecuted to the fullest extent of the law. Unless otherwise stated the results shown in this test report refer only to the sample(s) tested .
Attention: To check the authenticity of testing /inspection report & certificate, please contact us at telephone: (86-755) 8307 1443, or email: CN.Doccheck@sgs.com
SGS-CSTC Standards Technical Services Co., Ltd. Ningbo Branch Chemical Laboratory
No.1177, Lingyun Road, Hi-Tech Zone, Ningbo, Zhejiang, China 315040 t E&E (86-574)89070249 www.sgsgroup.com.cn
中国・浙江・宁波高新区凌云路1177号 邮编: 315040 t HL (86-574)89070271 t ML (86-574)89070242 sgs.china@sgs.com
Member of the SGS Group (SGS SA)

检测报告 编号: NGBEC2200627404 日期: 2022年04月20日 第4页,共11页

除非另有说明，参照ILAC-G8:09/2019，使用简单接受（w=0）的二元判定规则进行符合性判定。
除非另有说明，此报告结果仅对检测的样品负责。本报告未经本公司书面许可，不可部分复制。
检测报告仅用于客户科研、教学、内部质量控制、产品研发等目的，仅供内部参考。

Unless otherwise agreed in writing, this document is issued by the Company subject to its General Conditions of Service printed overleaf, available on request or accessible at http://www.sgs.com/en/Terms-and-Conditions.aspx and, for electronic format documents, subject to Terms and Conditions for Electronic Documents at http://www.sgs.com/en/Terms-and-Conditions/Terms-e-Document.aspx. Attention is drawn to the limitation of liability, indemnification and jurisdiction issues defined therein. Any holder of this document is advised that information contained hereon reflects the Company's findings at the time of its intervention only and within the limits of Client's instructions, if any. The Company's sole responsibility is to its Client and this document does not exonerate parties to a transaction from exercising all their rights and obligations under the transaction documents. This document cannot be reproduced except in full, without prior written approval of the Company. Any unauthorized alteration, forgery or falsification of the content or appearance of this document is unlawful and offenders may be prosecuted to the fullest extent of the law. Unless otherwise stated the results shown in this test report refer only to the sample(s) tested .
Attention: To check the authenticity of testing /inspection report & certificate, please contact us at telephone: (86-755) 8307 1443, or email: CN.Doccheck@sgs.com
SGS-CSTC Standards Technical Services Co., Ltd. Ningbo Branch Chemical Laboratory
No.1177, Lingyun Road, Hi-Tech Zone, Ningbo, Zhejiang, China 315040 t E&E (86-574)89070249 www.sgsgroup.com.cn
中国・浙江・宁波高新区凌云路1177号 邮编: 315040 t HL (86-574)89070271 t ML (86-574)89070242 sgs.china@sgs.com
Member of the SGS Group (SGS SA)

SGS

检测报告 编号: NGBEC2200627404 日期: 2022年04月20日 第5页,共11页

附件:
XH , 1.0, SH, SHD, 1.25, 51021, DF14, DF13, GH, ZH, PH, PHB, PA, PHSD, DF11, C1251, 51047, 51146, FI-S, PHD, YHD200, PA, SMP, SMW, SMH, SMH200, SMH200-H, YH200, 20039WR, 杜邦2.0, XH/TJC3, XA, HA, XHB, XHD, XHE, EH, EI, 小四P, 5263, 5264, 5267, 5268, SZN, SAN, SCN, SCND, JC15, JC20, JC25, 5102, 5240, SMH250, SMP250, SMW250, 25048HS, 25045HP, SM, TJC8, 杜邦2.54, TJC8A, 杜邦带锁, TJC8B, TJC8H, 5051, 2510, 美尚美, 43640, 43645, 43020, 43025, 5500, 5600, VH, VHRR, YH396, VHR, 35156, 2139, 3.96, 90331, 5195, 5196, 39612, FL, 5557, 5559, 5566, 5569, SL, RV42, EL, YL, 小EL, 8981, 大四P, 5058, 5.08, L6.2, VL, VLP/VLR, TJC2, TJC2A, TJC2B, TJC4, TJC1, 1806, MX3.0, 1.58, 51005, 51006, BH3.5, BH4.0, 63080, 51004, TJC15, A4203, CL014, OTP, MKH, SMF, Cy-X201, 35108, 35150, 35151, 35224, 35180, 35965, 42021, 42022, 42002, 35955, SA, SCS, 35189, 35196, CH10, CH2.5, 543, SLP, SLR, YHL500, YWL500, FFC, FPC, 20030, 250, LGC, S11, YH025, 35155, 25415, 5197, 5198, 110, 2.8, 6.3, SCS
NH, XHQ, 42474, 42475, QH, NV, 50300, 50301, 5025, 3191, 5199, STV5, YHL500, YWL500, F001, F002, D440, D600, D620, D700, D220, D230, D250, D480, D520, D280, D630, D430, D400, D450, U-T, F1001-T, SIN-T, 774, 773, 778, 294, TU-JTK(SV), TU(SNB), TO-JTK(RV), MDD, FDD, TG-JT, IDC, AUTO, CONNECTOR, DJ70, DT04, DT06, UY/K1, UY2/K2, UR/K3, UR2, UB/K4, UB2A, UG/K5, U1R/K8, U1B/K9, HJKT10, UDW2, 314, A5001, A5002, MC100, FPC2.54, SGN, PHR, ZHR, 205, 5.2, C1801, C1802, 2060, A5003, ME020, ME010, FPC/FFC, B2541, 1971845, 1971846, 2232043, 2232044, 2232511, 1971895, 1971896, JWPF, SY, Molex1.5, ME0100, RAST, A5004, DV, SJN, SDN, 35182, 35524, RCY, LC, VR, SHJ, SHL, DF19, ACH, IL-Z, SATA, XSR, SUR, SUH, ZE, ZND, ZPD, SFH, PUD, AMP2.0, 35507, DF3, PND, RE, RA, RF, SYP/SYR, HIF3, MC100/ME020/ME010, F2541, A5005, A5006, A5007, A2509, A25010, A25011, A25012, B13001, B76201, VHB, VHC, VHD
1969738, 1969740, 1971845, 1971846, 1971895, 1971896, 1971946 thru 1971949, 1971954 thru 1971957, 2232008 thru 2232011, 2232000 thru 2232003, 2232016 thru 2232019, 1971962 thru 1971965, 2232024 thru 2232027, 2232289 thru 2232292, 2232043 thru 2232074, 2232298 thru 2232301, 2232511, 2232532, 2232557, 2232559, 2232560, 2232562, 2232563, 2232565, 2232566, 2232568, 2232569, 2232571, 2232572, 2232574, 2232575, 2232577, 2232578, 2232580, 2232581, 2232583, 2232584, 2232586, 2232587, 2232589, 2232590, 2232592, 2232593, 2232595, 2232596, 2232598, 2232599, 2232601, 2232602, 2232604, 2232605, 2232607, 2232608, 2232611 thru 2232682, 2292457, 2292458,
1064, 2064, 3064, 1080, 2080, 3080, 1100, 2100, 3100, 1120, 2120, 3120, 1150, 2150, 3150,
1180, 2180, 3180, 1230, 2230, 3230, 1250, 2250, 3250, 1280, 2280, 3280, 1300, 2300, 3300, 1480, 2480, 3480,
1630, 2630, 3630, 1780, 2780, 3780, 1950, 2950, 3950, 1010, 2010, 3010, 1013, 2013, 3013, 1015, 2015, 3015,
1016, 2016, 3016, 1025, 2025, 3025, 1035, 2035, 3035, 1045, 2045, 3045, 1058, 2058, 3058, 1999, 2999, 3999,
401, 402, 403, 503, TPA, BX
A1001 A1002 A1003 A1004 A1005 A1006 A1007 A1008 A1009 A1251 A1252 A1253 A1254
A1255 A1256 A1257 A1258 A1259 A1501 A1502 A1503 A1504 A1505 A1506 A1507 A1508
A1509 A2001 A2002 A2003 A2004 A2005 A2006 A2007 A2008 A2009 A2010 A2011 A2012
A2013 A2014 A2015 A2016 A2017 A2018 A2501 A2502 A2503 A2504 A2505 A2506 A2507
A2508 A2509 A25010 A25011 A25012 A25013 A25014 A25015 A25016 A25017 A25018 A2541 A2542
A2543 A2544 A2545 A2546 A2547 A2548 A2549 A3001 A3002 A3003 A3004 A3005 A3006
A3007 A3008 A3009 A3301 A3302 A3303 A3304 A3305 A3306 A3307 A3308 A3309 A3961
A3962 A3963 A3964 A3965 A3966 A3967 A3968 A3969 A4201 A4202 A4203 A4204 A4205
A4206 A4207 A4208 A4209 A5001 A5002 A5003 A5004 A5005 A5006 A5007 A5008 A5009
A5081 A5082 A5083 A5084 A5085 A5086 A5087 A5088 A5089 A6501 A6502 A6503 A6504
A6505 A6506 A6507 A6508 A6509 B1251 B1252 B1253 B1254 B1255 B1256 B1257 B1258
B1259 B1501 B1502 B1503 B1504 B1505 B1506 B1507 B1508 B1509 B2001 B2002 B2003
B2004 B2005 B2006 B2007 B2008 B2009 B2501 B2502 B2503 B2504 B2505 B2506 B2507

Unless otherwise agreed in writing, this document is issued by the Company subject to its General Conditions of Service printed overleaf, available on request or accessible at http://www.sgs.com/en/Terms-and-Conditions.aspx and, for electronic format documents, subject to Terms and Conditions for Electronic Documents at http://www.sgs.com/en/Terms-and-Conditions/Terms-e-Document.aspx. Attention is drawn to the limitation of liability, indemnification and jurisdiction issues defined therein. Any holder of this document is advised that information contained hereon reflects the Company's findings at the time of its intervention only and within the limits of Client's instructions, if any. The Company's sole responsibility is to its Client and this document does not exonerate parties to a transaction from exercising all their rights and obligations under the transaction documents. This document cannot be reproduced except in full, without prior written approval of the Company. Any unauthorized alteration, forgery or falsification of the content or appearance of this document is unlawful and offenders may be prosecuted to the fullest extent of the law. Unless otherwise stated the results shown in this test report refer only to the sample(s) tested.
Attention: To check the authenticity of testing /inspection report & certificate, please contact us at telephone: (86-755) 8307 1443, or email: CN.Doccheck@sgs.com
检验检测专用章 Inspection & Testing Services
SGS-CSTC Standards Technical Services Co.,Ltd. Ningbo Branch Chemical Laboratory
No.1177, Lingyun Road, Hi-Tech Zone, Ningbo, Zhejiang, China 315040 t E&E (86-574)89070249 www.sgsgroup.com.cn
中国·浙江·宁波高新区凌云路1177号 邮编: 315040 t HL (86-574)89070271 t ML (86-574)89070242 sgs.china@sgs.com
Member of the SGS Group (SGS SA)

SGS

检测报告 编号: NGBEC2200627404 日期: 2022年04月20日 第6页,共11页

B2508 B2509 B2541 B2542 B2543 B2544 B2545 B2546 B2547 B2548 B2549 B76201 B76202
B76203 B76204 B76205 B76206 B76207 B76208 B76209 B13001 B13002 B13003 B13004
B13005 B13006 B13007 B13008 B13009 C01581 C01582 C01583 C01584 C01585 C01586 C01587
C01588 C01589 C1251 C1252 C1253 C1254 C1255 C1256 C1257 C1258 C1259 C1501 C1502
C1503 C1504 C1505 C1506 C1507 C1508 C1509 C2001 C2002 C2003 C2004 C2005
C2006 C2007 C2008 C2009 C2501 C2502 C2503 C2504 C2505 C2506 C2507 C2508
C2509 C25010 C25011 C25012 C25013 C25014 C25015 C25016 C25017 C25018 C2541 C2542
C2543 C2544 C2545 C2546 C2547 C2548 C2549 C3001 C3002 C3003 C3004 C3005
C3006 C3007 C3008 C3009 C3501 C3502 C3503 C3504 C3505 C3506 C3507 C3508
C3509 C3681 C3682 C3683 C3684 C3685 C3686 C3687 C3688 C3689 C3961 C3962
C3963 C3964 C3965 C3966 C3967 C3968 C3969
C4001 C4002 C4003 C4004 C4005 C4006 C4007 C4008 C4009 C4141 C4142 C4143 C4144
C4145 C4146 C4147 C4148 C4149 C4201 C4202 C4203 C4204 C4205 C4206 C4207 C4208
C4209 C4501 C4502 C4503 C4504 C4505 C4506 C4507 C4508 C4509 C5001 C5002 C5003
C5004 C5005 C5006 C5007 C5008 C5009 C6201 C6202 C6203 C6204 C6205 C6206 C6207
C6208 C6209 C6351 C6352 C6353 C6354 C6355 C6356 C6357 C6358 C6359 D2801 D2802
D2803 D2804 D2805 D2806 D2807 D2808 D2809 D4801 D4802 D4803 D4804 D4805 D4806
D4807 D4808 D4809 D5201 D5202 D5203 D5204 D5205 D5206 D5207 D5208 D5209 D6301
D6302 D6303 D6304 D6305 D6306 D6307 D6308 D6309 D6201 D6202 D6203 D6204 D6205
D6206 D6207 D6208 D6209 D7001 D7002 D7003 D7004 D7005 D7006 D7007 D7008 D7009
F0501 F0502 F0503 F0504 F0505 F0506 F0507 F0508 F0509 F05010 F05011 F05012
F05013 F05014 F05015 F05016 F05017 F05018 F1001 F1002 F1003 F1004 F1005 F1006 F1007
F1008 F1009 F10010 F10011 F10012 F10013 F10014 F10015 F10016 F10017 F10018 F2541 F2542
F2543 F2544 F2545 F2546 F2547 F2548 F2549 P0001 P0002 P0003 P0004 P0005 P0006
P0007 P0008 P0009 P0010 P0011 P0012 P0013 P0014 P0015 P0016 P0017 P0018 P0019
P0020 P0021 P0022 P0023 P0024 P0025 P0026 P0027 D2301 D2302 D2303 D2304 D2305
D2306 D2307 D2308 D2309 D6001 D6002 D6003 D6004 D6005 D6006 D6007 D6008 D6009
D2201 D2202 D2203 D2204 D2205 D2206 D2207 D2208 D2209

Unless otherwise agreed in writing, this document is issued by the Company subject to its General Conditions of Service printed overleaf, available on request or accessible at http://www.sgs.com/en/Terms-and-Conditions.aspx and, for electronic format documents, subject to Terms and Conditions for Electronic Documents at http://www.sgs.com/en/Terms-and-Conditions/Terms-e-Document.aspx. Attention is drawn to the limitation of liability, indemnification and jurisdiction issues defined therein. Any holder of this document is advised that information contained hereon reflects the Company's findings at the time of its intervention only and within the limits of Client's instructions, if any. The Company's sole responsibility is to its Client and this document does not exonerate parties to a transaction from exercising all their rights and obligations under the transaction documents. This document cannot be reproduced except in full, without prior written approval of the Company. Any unauthorized alteration, forgery or falsification of the content or appearance of this document is unlawful and offenders may be prosecuted to the fullest extent of the law. Unless otherwise stated the results shown in this test report refer only to the sample(s) tested .
Attention: To check the authenticity of testing /inspection report & certificate, please contact us at telephone: (86-755) 8307 1443, or email: CN.Doccheck@sgs.com

SGS-CSTC Standards Technical Services Co.,Ltd. Ningbo Branch Chemical Laboratory
No.1177, Lingyun Road, Hi-Tech Zone, Ningbo, Zhejiang, China 315040 t E&E (86-574)89070249 www.sgsgroup.com.cn
中国·浙江·宁波高新区凌云路1177号 邮编: 315040 t HL (86-574)89070271 t ML (86-574)89070242 sgs.china@sgs.com

Member of the SGS Group (SGS SA)

检测报告 编号: NGBEC2200627404 日期: 2022年04月20日 第7页,共11页

附件

元素(IEC62321) 测试流程图

1)样品按照下述流程被完全消解

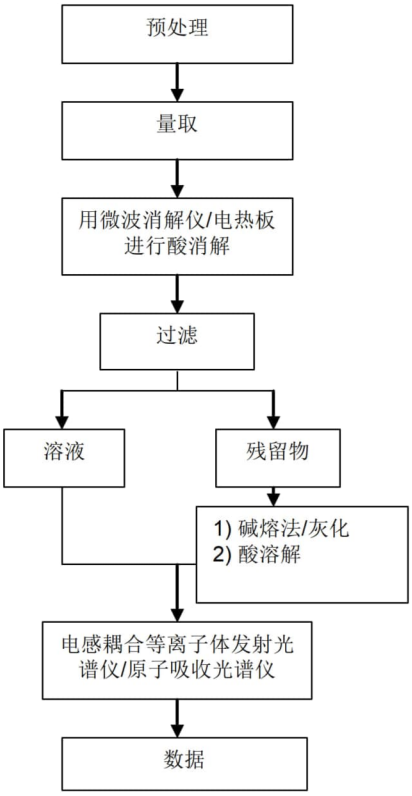

Unless otherwise agreed in writing, this document is issued by the Company subject to its General Conditions of Service printed overleaf, available on request or accessible at http://www.sgs.com/en/Terms-and-Conditions.aspx and, for electronic format documents, subject to Terms and Conditions for Electronic Documents at http://www.sgs.com/en/Terms-and-Conditions/Terms-e-Document.aspx. Attention is drawn to the limitation of liability, indemnification and jurisdiction issues defined therein. Any holder of this document is advised that information contained hereon reflects the Company's findings at the time of its intervention only and within the limits of Client's instructions, if any. The Company's sole responsibility is to its Client and this document does not exonerate parties to a transaction from exercising all their rights and obligations under the transaction documents. This document cannot be reproduced except in full, without prior written approval of the Company. Any unauthorized alteration, forgery or falsification of the content or appearance of this document is unlawful and offenders may be prosecuted to the fullest extent of the law. Unless otherwise stated the results shown in this test report refer only to the sample(s) tested .
Attention: To check the authenticity of testing /inspection report & certificate, please contact us at telephone: (86-755) 8307 1443, or email: CN.Doccheck@sgs.com
SGS-CSTC Standards Technical Services Co.,Ltd. Ningbo Branch Chemical Laboratory
No.1177, Lingyun Road, Hi-Tech Zone, Ningbo, Zhejiang, China 315040 t E&E (86-574)89070249 www.sgsgroup.com.cn
中国・浙江・宁波高新区凌云路1177号 邮编: 315040 t HL (86-574)89070271 t ML (86-574)89070242 sgs.china@sgs.com
Member of the SGS Group (SGS SA)

SGS

检测报告 编号: NGBEC2200627404 日期: 2022年04月20日 第8页,共11页

附件

六价铬测试流程图

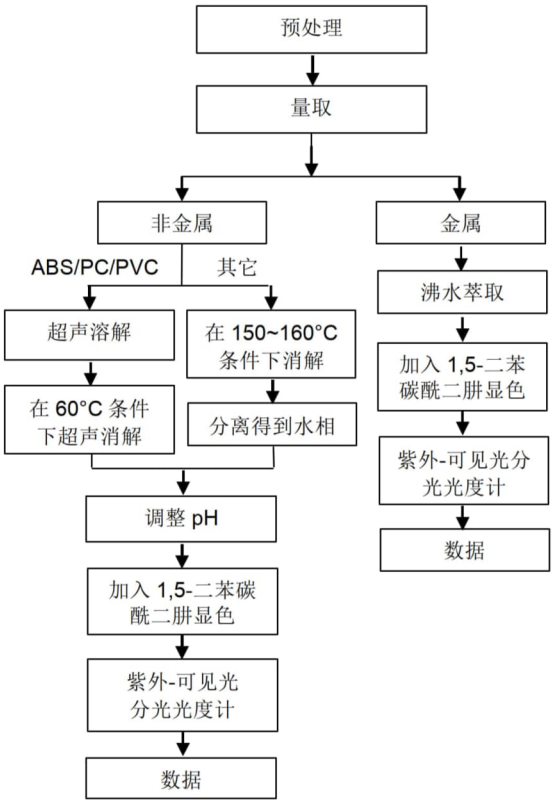

Unless otherwise agreed in writing, this document is issued by the Company subject to its General Conditions of Service printed overleaf, available on request or accessible at http://www.sgs.com/en/Terms-and-Conditions.aspx and, for electronic format documents, subject to Terms and Conditions for Electronic Documents at http://www.sgs.com/en/Terms-and-Conditions/Terms-e-Document.aspx. Attention is drawn to the limitation of liability, indemnification and jurisdiction issues defined therein. Any holder of this document is advised that information contained hereon reflects the Company's findings at the time of its intervention only and within the limits of Client's instructions, if any. The Company's sole responsibility is to its Client and this document does not exonerate parties to a transaction from exercising all their rights and obligations under the transaction documents. This document cannot be reproduced except in full, without prior written approval of the Company. Any unauthorized alteration, forgery or falsification of the content or appearance of this document is unlawful and offenders may be prosecuted to the fullest extent of the law. Unless otherwise stated the results shown in this test report refer only to the sample(s) tested .
Attention: To check the authenticity of testing /inspection report & certificate, please contact us at telephone: (86-755) 8307 1443, or email: CN.Doccheck@sgs.com
检验检测专用章 Inspection & Testing Services
SGS-CSTC Standards Technical Services Co.,Ltd. Ningbo Branch Chemical Laboratory
No.1177, Lingyun Road, Hi-Tech Zone, Ningbo, Zhejiang, China 315040 t E&E (86-574)89070249 www.sgsgroup.com.cn
中国·浙江·宁波高新区凌云路1177号 邮编: 315040 t HL (86-574)89070271 t ML (86-574)89070242 sgs.china@sgs.com
Member of the SGS Group (SGS SA)

附件

PBBs/PBDEs 测试流程图

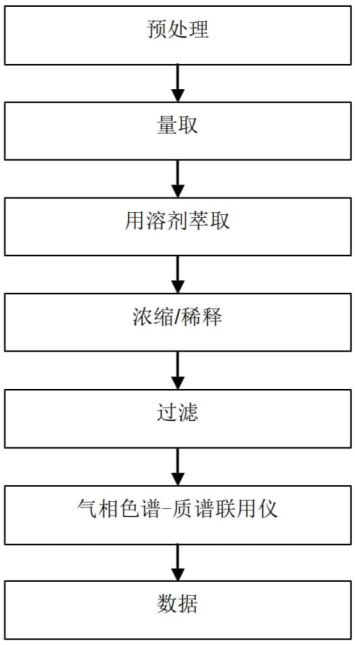

Unless otherwise agreed in writing, this document is issued by the Company subject to its General Conditions of Service printed overleaf, available on request or accessible at http://www.sgs.com/en/Terms-and-Conditions.aspx and, for electronic format documents, subject to Terms and Conditions for Electronic Documents at http://www.sgs.com/en/Terms-and-Conditions/Terms-e-Document.aspx. Attention is drawn to the limitation of liability, indemnification and jurisdiction issues defined therein. Any holder of this document is advised that information contained hereon reflects the Company's findings at the time of its intervention only and within the limits of Client's instructions, if any. The Company's sole responsibility is to its Client and this document does not exonerate parties to a transaction from exercising all their rights and obligations under the transaction documents. This document cannot be reproduced except in full, without prior written approval of the Company. Any unauthorized alteration, forgery or falsification of the content or appearance of this document is unlawful and offenders may be prosecuted to the fullest extent of the law. Unless otherwise stated the results shown in this test report refer only to the sample(s) tested .
Attention: To check the authenticity of testing /inspection report & certificate, please contact us at telephone: (86-755) 8307 1443, or email: CN.Doccheck@sgs.com
SGS-CSTC Standards Technical Services Co.,Ltd. Ningbo Branch Chemical Laboratory
No.1177, Lingyun Road, Hi-Tech Zone, Ningbo, Zhejiang, China 315040 t E&E (86-574)89070249 www.sgsgroup.com.cn
中国·浙江·宁波高新区凌云路1177号 邮编: 315040 t HL (86-574)89070271 t ML (86-574)89070242 sgs.china@sgs.com
Member of the SGS Group (SGS SA)

附件

Phthalates 测试流程图

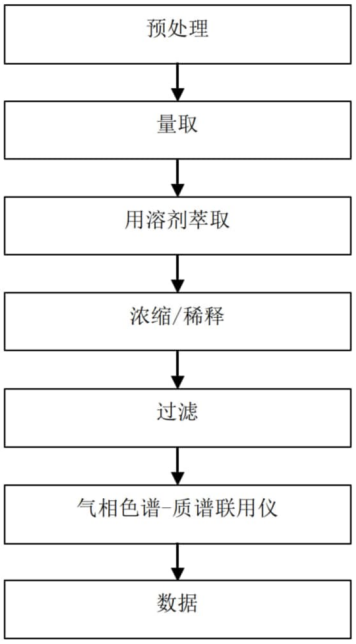

Unless otherwise agreed in writing, this document is issued by the Company subject to its General Conditions of Service printed overleaf, available on request or accessible at http://www.sgs.com/en/Terms-and-Conditions.aspx and, for electronic format documents, subject to Terms and Conditions for Electronic Documents at http://www.sgs.com/en/Terms-and-Conditions/Terms-e-Document.aspx. Attention is drawn to the limitation of liability, indemnification and jurisdiction issues defined therein. Any holder of this document is advised that information contained hereon reflects the Company's findings at the time of its intervention only and within the limits of Client's instructions, if any. The Company's sole responsibility is to its Client and this document does not exonerate parties to a transaction from exercising all their rights and obligations under the transaction documents. This document cannot be reproduced except in full, without prior written approval of the Company. Any unauthorized alteration, forgery or falsification of the content or appearance of this document is unlawful and offenders may be prosecuted to the fullest extent of the law. Unless otherwise stated the results shown in this test report refer only to the sample(s) tested .
Attention: To check the authenticity of testing /inspection report & certificate, please contact us at telephone: (86-755) 8307 1443, or email: CN.Doccheck@sgs.com
SGS-CSTC Standards Technical Services Co.,Ltd. Ningbo Branch Chemical Laboratory
No.1177, Lingyun Road, Hi-Tech Zone, Ningbo, Zhejiang, China 315040 t E&E (86-574)89070249 www.sgsgroup.com.cn
中国·浙江·宁波高新区凌云路1177号 邮编: 315040 t HL (86-574)89070271 t ML (86-574)89070242 sgs.china@sgs.com
Member of the SGS Group (SGS SA)

检测报告 编号: NGBEC2200627404 日期: 2022年04月20日 第11页,共11页

样品照片:

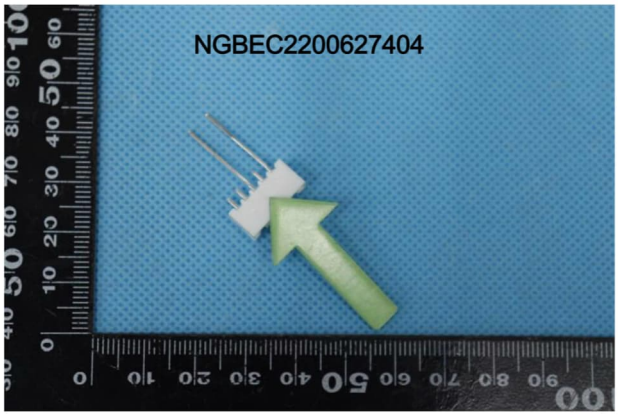

NGB22-006274.001

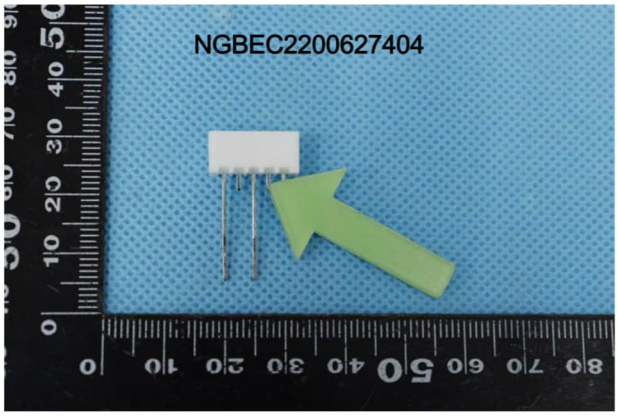

NGB22-006274.002

此照片仅限于随SGS正本报告使用

*** 报告完 ***

Unless otherwise agreed in writing, this document is issued by the Company subject to its General Conditions of Service printed overleaf, available on request or accessible at http://www.sgs.com/en/Terms-and-Conditions.aspx and, for electronic format documents, subject to Terms and Conditions for Electronic Documents at http://www.sgs.com/en/Terms-and-Conditions/Terms-e-Document.aspx. Attention is drawn to the limitation of liability, indemnification and jurisdiction issues defined therein. Any holder of this document is advised that information contained hereon reflects the Company's findings at the time of its intervention only and within the limits of Client's instructions, if any. The Company's sole responsibility is to its Client and this document does not exonerate parties to a transaction from exercising all their rights and obligations under the transaction documents. This document cannot be reproduced except in full, without prior written approval of the Company. Any unauthorized alteration, forgery or falsification of the content or appearance of this document is unlawful and offenders may be prosecuted to the fullest extent of the law. Unless otherwise stated the results shown in this test report refer only to the sample(s) tested .
Attention: To check the authenticity of testing /inspection report & certificate, please contact us at telephone: (86-755) 8307 1443, or email: CN.Doccheck@sgs.com

SGS-CSTC Standards Technical Services Co.,Ltd. Ningbo Branch Chemical Laboratory
No.1177, Lingyun Road, Hi-Tech Zone, Ningbo, Zhejiang, China 315040 t E&E (86-574)89070249 www.sgsgroup.com.cn
中国・浙江・宁波高新区凌云路1177号 邮编: 315040 t HL (86-574)89070271 t ML (86-574)89070242 sgs.china@sgs.com

Member of the SGS Group (SGS SA)

SGS

检测报告

编号: NGBEC2200904704　　日期: 2022年05月17日　　第1页,共7页

客户名称：　浙江联和电子有限公司
客户地址：　浙江省乐清市乐清湾港区创新路8号

样品名称：　端子 针
客户参考信息：　见附件
以上样品及信息由客户提供。

SGS工作编号：	NP22-002236 - NB
样品接收日期：	2022年05月07日
检测周期：	2022年05月07日 - 2022年05月17日
检测要求：	根据客户要求检测
检测方法：	请参见下一页
检测结果：	请参见下一页
结论：	基于所送样品进行的检测，镉、铅、汞、六价铬的检测结果符合欧盟RoHS指令2011/65/EU附录II的修正指令(EU) 2015/863的限值要求。

通标标准技术服务有限公司宁波分公司
授权签名

张倩倩

Ashley Zhang张倩倩
批准签署人

scan to see the report

C32B7C43

Unless otherwise agreed in writing, this document is issued by the Company subject to its General Conditions of Service printed overleaf, available on request or accessible at http://www.sgs.com/en/Terms-and-Conditions.aspx and, for electronic format documents, subject to Terms and Conditions for Electronic Documents at http://www.sgs.com/en/Terms-and-Conditions/Terms-e-Document.aspx. Attention is drawn to the limitation of liability, indemnification and jurisdiction issues defined therein. Any holder of this document is advised that information contained hereon reflects the Company's findings at the time of its intervention only and within the limits of Client's instructions, if any. The Company's sole responsibility is to its Client and this document does not exonerate parties to a transaction from exercising all their rights and obligations under the transaction documents. This document cannot be reproduced except in full, without prior written approval of the Company. Any unauthorized alteration, forgery or falsification of the content or appearance of this document is unlawful and offenders may be prosecuted to the fullest extent of the law. Unless otherwise stated the results shown in this test report refer only to the sample(s) tested .
Attention: To check the authenticity of testing /inspection report & certificate, please contact us at telephone: (86-755) 8307 1443, or email: CN.Doccheck@sgs.com

SGS-CSTC Standards Technical Services (Shanghai) Co.,Ltd. Ningbo Branch Chemical Laboratory
No.1177, Lingyun Road, Hi-Tech Zone, Ningbo, Zhejiang, China 315040　t E&E (86-574)89070249　www.sgsgroup.com.cn
中国・浙江・宁波高新区凌云路1177号　邮编: 315040　t HL (86-574)89070271　t ML (86-574)89070242　sgs.china@sgs.com

Member of the SGS Group (SGS SA)

检测报告

编号: NGBEC2200904704　　日期: 2022年05月17日　　第2页,共7页

检测结果：

检测样品描述：

样品编号	SGS样品ID	描述
SN1	NGB22-009047.001	银色金属

备注：

(1) 1 mg/kg = 0.0001%
(2) MDL = 方法检测限
(3) ND = 未检出 (< MDL)
(4) "-" = 未规定

RoHS指令2011/65/EU附录II的修正指令(EU) 2015/863

检测方法：　参考IEC 62321-4:2013+AMD1:2017, IEC 62321-5:2013 和 IEC 62321-7-1:2015, 采用ICP-OES和UV-Vis 进行分析.

检测项目	限值	单位	MDL	*001*
镉 (Cd)	100	mg/kg	2	ND
铅(Pb)	1000	mg/kg	2	5
汞 (Hg)	1000	mg/kg	2	ND
六价铬(Cr(VI))▾	-	μg/cm²	0.10	ND

备注：

(1) 最大允许极限值引用自RoHS指令(EU) 2015/863。
(2) IEC 62321系列等同于 EN 62321系列
https://www.cenelec.eu/dyn/www/f?p=104:30:1742232870351101:::FSP_ORG_ID,FSP_LANG_ID:1258637,25
(3) ▾ = a. 当六价铬的浓度高于0.13 μg/cm2时，样品为阳性，即含有六价铬；
b. 当六价铬的浓度为ND(低于0.10 μg/cm2)时，样品为阴性，即未检测到六价铬；
c. 当六价铬的浓度介于0.10 μg/cm2与0.13 μg/cm2之间时，无法直接判定是否检测到六价铬，因不同个体的样品表面差异可能会影响测定结果；
由于未获知样品的存储条件和生产日期，样品的六价铬测试结果仅能代表测试时样品含六价铬的状态。
除非另有说明，参照ILAC-G8:09/2019，使用简单接受（w=0）的二元判定规则进行符合性判定。
除非另有说明，此报告结果仅对检测的样品负责。本报告未经本公司书面许可，不可部分复制。
检测报告仅用于客户科研、教学、内部质量控制、产品研发等目的，仅供内部参考。

Unless otherwise agreed in writing, this document is issued by the Company subject to its General Conditions of Service printed overleaf, available on request or accessible at http://www.sgs.com/en/Terms-and-Conditions.aspx and, for electronic format documents, subject to Terms and Conditions for Electronic Documents at http://www.sgs.com/en/Terms-and-Conditions/Terms-e-Document.aspx. Attention is drawn to the limitation of liability, indemnification and jurisdiction issues defined therein. Any holder of this document is advised that information contained hereon reflects the Company's findings at the time of its intervention only and within the limits of Client's instructions, if any. The Company's sole responsibility is to its Client and this document does not exonerate parties to a transaction from exercising all their rights and obligations under the transaction documents. This document cannot be reproduced except in full, without prior written approval of the Company. Any unauthorized alteration, forgery or falsification of the content or appearance of this document is unlawful and offenders may be prosecuted to the fullest extent of the law. Unless otherwise stated the results shown in this test report refer only to the sample(s) tested.
Attention: To check the authenticity of testing /inspection report & certificate, please contact us at telephone: (86-755) 8307 1443, or email: CN.Doccheck@sgs.com
SGS-CSTC Standards Technical Services Co., Ltd. Ningbo Branch Chemical Laboratory
No.1177, Lingyun Road, Hi-Tech Zone, Ningbo, Zhejiang, China 315040　t E&E (86-574)89070249　www.sgsgroup.com.cn
中国・浙江・宁波高新区凌云路1177号　邮编: 315040　t HL (86-574)89070271　t ML (86-574)89070242　sgs.china@sgs.com
Member of the SGS Group (SGS SA)

SGS

检测报告 编号: NGBEC2200904704 日期: 2022年05月17日 第3页,共7页

附件:
XH , 1.0, SH, SHD, 1.25, 51021, DF14, DF13, GH, ZH, PH, PHB, PA, PHSD, DF11, C1251, 51047, 51146, FI-S, PHD, YHD200, PA, SMP, SMW, SMH, SMH200, SMH200-H, YH200, 20039WR, 杜邦2.0, XH/TJC3, XA, HA, XHB, XHD, XHE, EH, EI, 小四P, 5263, 5264, 5267, 5268, SZN, SAN, SCN, SCND, JC15, JC20, JC25, 5102, 5240, SMH250, SMP250, SMW250, 25048HS, 25045HP, SM, TJC8, 杜邦2.54, TJC8A, 杜邦带锁, TJC8B, TJC8H, 5051, 2510, 美尚美, 43640, 43645, 43020, 43025, 5500, 5600, VH, VHRR, YH396, VHR, 35156, 2139, 3.96, 90331, 5195, 5196, 39612, FL, 5557, 5559, 5566 , 5569, SL, RV42, EL, YL, 小EL, 8981, 大四P, 5058, 5.08, L6.2, VL, VLP/VLR, TJC2, TJC2A, TJC2B, TJC4, TJC1, 1806, MX3.0, 1.58, 51005, 51006, BH3.5, BH4.0, 63080, 51004, TJC15, A4203, CL014, OTP, MKH, SMF, Cy-X201, 35108, 35150, 35151, 35224, 35180, 35965, 42021, 42022, 42002, 35955, SA, SCS, 35189, 35196, CH10, CH2.5, 543, SLP, SLR, YHL500, YWL500, FFC, FPC, 20030, 250, LGC, S11, YH025, 35155, 25415, 5197, 5198, 110, 2.8, 6.3, SCS
NH, XHQ, 42474, 42475, QH, NV, 50300, 50301, 5025, 3191, 5199, STV5, YHL500, YWL500, F001, F002, D440, D600, D620, D700, D220, D230, D250, D480, D520, D280, D630, D430, D400, D450, U-T, F1001-T, SIN-T, 774, 773, 778, 294, TU-JTK(SV), TU(SNB), TO-JTK(RV), MDD, FDD, TG-JT, IDC, AUTO, CONNECTOR, DJ70, DT04, DT06, UY/K1, UY2/K2, UR/K3, UR2, UB/K4, UB2A, UG/K5, U1R/K8, U1B/K9, HJKT10, UDW2, 314, A5001, A5002, MC100, FPC2.54, SGN, PHR, ZHR, 205, 5.2, C1801, C1802, 2060, A5003, ME020, ME010, FPC/FFC, B2541, 1971845, 1971846, 2232043, 2232044, 2232511, 1971895, 1971896, JWPF, SY, Molex1.5, ME0100, RAST, A5004, DV, SJN, SDN, 35182, 35524, RCY, LC, VR, SHJ, SHL, DF19, ACH, IL-Z, SATA, XSR, SUR, SUH, ZE, ZND, ZPD, SFH, PUD, AMP2.0, 35507, DF3, PND, RE, RA, RF, SYP/SYR, HIF3, MC100/ME020/ME010, F2541, A5005, A5006, A5007, A2509, A25010, A25011, A25012, B13001, B76201, VHB, VHC, VHD
1969738, 1969740, 1971845, 1971846, 1971895, 1971896, 1971946 thru 1971949, 1971954 thru 1971957, 2232008 thru 2232011, 2232000 thru 2232003, 2232016 thru 2232019, 1971962 thru 1971965, 2232024 thru 2232027, 2232289 thru 2232292, 2232043 thru 2232074, 2232298 thru 2232301, 2232511, 2232532, 2232557, 2232559, 2232560, 2232562, 2232563, 2232565, 2232566, 2232568, 2232569, 2232571, 2232572, 2232574, 2232575, 2232577, 2232578, 2232580, 2232581, 2232583, 2232584, 2232586, 2232587, 2232589, 2232590, 2232592, 2232593, 2232595, 2232596, 2232598, 2232599, 2232601, 2232602, 2232604, 2232605, 2232607, 2232608, 2232611 thru 2232682, 2292457, 2292458,
1064, 2064, 3064, 1080, 2080, 3080, 1100, 2100, 3100, 1120, 2120, 3120, 1150, 2150, 3150,
1180, 2180, 3180, 1230, 2230, 3230, 1250, 2250, 3250, 1280, 2280, 3280, 1300, 2300, 3300, 1480, 2480, 3480,
1630, 2630, 3630, 1780, 2780, 3780, 1950, 2950, 3950, 1010, 2010, 3010, 1013, 2013, 3013, 1015, 2015, 3015,
1016, 2016, 3016, 1025, 2025, 3025, 1035, 2035, 3035, 1045, 2045, 3045, 1058, 2058, 3058, 1999, 2999, 3999,
401, 402, 403, 503, TPA, BX
A1001 A1002 A1003 A1004 A1005 A1006 A1007 A1008 A1009 A1251 A1252 A1253 A1254
A1255 A1256 A1257 A1258 A1259 A1501 A1502 A1503 A1504 A1505 A1506 A1507 A1508
A1509 A2001 A2002 A2003 A2004 A2005 A2006 A2007 A2008 A2009 A2010 A2011 A2012
A2013 A2014 A2015 A2016 A2017 A2018 A2501 A2502 A2503 A2504 A2505 A2506 A2507
A2508 A2509 A25010 A25011 A25012 A25013 A25014 A25015 A25016 A25017 A25018 A2541 A2542
A2543 A2544 A2545 A2546 A2547 A2548 A2549 A3001 A3002 A3003 A3004 A3005 A3006
A3007 A3008 A3009 A3301 A3302 A3303 A3304 A3305 A3306 A3307 A3308 A3309 A3961
A3962 A3963 A3964 A3965 A3966 A3967 A3968 A3969 A4201 A4202 A4203 A4204 A4205
A4206 A4207 A4208 A4209 A5001 A5002 A5003 A5004 A5005 A5006 A5007 A5008 A5009
A5081 A5082 A5083 A5084 A5085 A5086 A5087 A5088 A5089 A6501 A6502 A6503 A6504
A6505 A6506 A6507 A6508 A6509 B1251 B1252 B1253 B1254 B1255 B1256 B1257 B1258
B1259 B1501 B1502 B1503 B1504 B1505 B1506 B1507 B1508 B1509 B2001 B2002 B2003
B2004 B2005 B2006 B2007 B2008 B2009 B2501 B2502 B2503 B2504 B2505 B2506 B2507

检验检测专用章 Inspection & Testing Services
SGS-CSTC Standards Technical Services (China) Co., Ltd. Ningbo Branch Chemical Laboratory

Unless otherwise agreed in writing, this document is issued by the Company subject to its General Conditions of Service printed overleaf, available on request or accessible at http://www.sgs.com/en/Terms-and-Conditions.aspx and, for electronic format documents, subject to Terms and Conditions for Electronic Documents at http://www.sgs.com/en/Terms-and-Conditions/Terms-e-Document.aspx. Attention is drawn to the limitation of liability, indemnification and jurisdiction issues defined therein. Any holder of this document is advised that information contained hereon reflects the Company's findings at the time of its intervention only and within the limits of Client's instructions, if any. The Company's sole responsibility is to its Client and this document does not exonerate parties to a transaction from exercising all their rights and obligations under the transaction documents. This document cannot be reproduced except in full, without prior written approval of the Company. Any unauthorized alteration, forgery or falsification of the content or appearance of this document is unlawful and offenders may be prosecuted to the fullest extent of the law. Unless otherwise stated the results shown in this test report refer only to the sample(s) tested.
Attention: To check the authenticity of testing /inspection report & certificate, please contact us at telephone: (86-755) 8307 1443, or email: CN.Doccheck@sgs.com
No.1177, Lingyun Road, Hi-Tech Zone, Ningbo, Zhejiang, China 315040 t E&E (86-574)89070249 www.sgsgroup.com.cn
中国·浙江·宁波高新区凌云路1177号 邮编: 315040 t HL (86-574)89070271 t ML (86-574)89070242 sgs.china@sgs.com
Member of the SGS Group (SGS SA)

SGS

检测报告 编号: NGBEC2200904704 日期: 2022年05月17日 第4页,共7页

B2508 B2509 B2541 B2542 B2543 B2544 B2545 B2546 B2547 B2548 B2549 B76201 B76202
B76203 B76204 B76205 B76206 B76207 B76208 B76209 B13001 B13002 B13003 B13004
B13005 B13006 B13007 B13008 B13009 C01581 C01582 C01583 C01584 C01585 C01586 C01587
C01588 C01589 C1251 C1252 C1253 C1254 C1255 C1256 C1257 C1258 C1259 C1501 C1502
C1503 C1504 C1505 C1506 C1507 C1508 C1509 C2001 C2002 C2003 C2004 C2005
C2006 C2007 C2008 C2009 C2501 C2502 C2503 C2504 C2505 C2506 C2507 C2508
C2509 C25010 C25011 C25012 C25013 C25014 C25015 C25016 C25017 C25018 C2541 C2542
C2543 C2544 C2545 C2546 C2547 C2548 C2549 C3001 C3002 C3003 C3004 C3005
C3006 C3007 C3008 C3009 C3501 C3502 C3503 C3504 C3505 C3506 C3507 C3508
C3509 C3681 C3682 C3683 C3684 C3685 C3686 C3687 C3688 C3689 C3961 C3962
C3963 C3964 C3965 C3966 C3967 C3968 C3969
C4001 C4002 C4003 C4004 C4005 C4006 C4007 C4008 C4009 C4141 C4142 C4143 C4144
C4145 C4146 C4147 C4148 C4149 C4201 C4202 C4203 C4204 C4205 C4206 C4207 C4208
C4209 C4501 C4502 C4503 C4504 C4505 C4506 C4507 C4508 C4509 C5001 C5002 C5003
C5004 C5005 C5006 C5007 C5008 C5009 C6201 C6202 C6203 C6204 C6205 C6206 C6207
C6208 C6209 C6351 C6352 C6353 C6354 C6355 C6356 C6357 C6358 C6359 D2801 D2802
D2803 D2804 D2805 D2806 D2807 D2808 D2809 D4801 D4802 D4803 D4804 D4805 D4806
D4807 D4808 D4809 D5201 D5202 D5203 D5204 D5205 D5206 D5207 D5208 D5209 D6301
D6302 D6303 D6304 D6305 D6306 D6307 D6308 D6309 D6201 D6202 D6203 D6204 D6205
D6206 D6207 D6208 D6209 D7001 D7002 D7003 D7004 D7005 D7006 D7007 D7008 D7009
F0501 F0502 F0503 F0504 F0505 F0506 F0507 F0508 F0509 F05010 F05011 F05012
F05013 F05014 F05015 F05016 F05017 F05018 F1001 F1002 F1003 F1004 F1005 F1006 F1007
F1008 F1009 F10010 F10011 F10012 F10013 F10014 F10015 F10016 F10017 F10018 F2541 F2542
F2543 F2544 F2545 F2546 F2547 F2548 F2549 P0001 P0002 P0003 P0004 P0005 P0006
P0007 P0008 P0009 P0010 P0011 P0012 P0013 P0014 P0015 P0016 P0017 P0018 P0019
P0020 P0021 P0022 P0023 P0024 P0025 P0026 P0027 D2301 D2302 D2303 D2304 D2305
D2306 D2307 D2308 D2309 D6001 D6002 D6003 D6004 D6005 D6006 D6007 D6008 D6009
D2201 D2202 D2203 D2204 D2205 D2206 D2207 D2208 D2209

Unless otherwise agreed in writing, this document is issued by the Company subject to its General Conditions of Service printed overleaf, available on request or accessible at http://www.sgs.com/en/Terms-and-Conditions.aspx and, for electronic format documents, subject to Terms and Conditions for Electronic Documents at http://www.sgs.com/en/Terms-and-Conditions/Terms-e-Document.aspx. Attention is drawn to the limitation of liability, indemnification and jurisdiction issues defined therein. Any holder of this document is advised that information contained hereon reflects the Company's findings at the time of its intervention only and within the limits of Client's instructions, if any. The Company's sole responsibility is to its Client and this document does not exonerate parties to a transaction from exercising all their rights and obligations under the transaction documents. This document cannot be reproduced except in full, without prior written approval of the Company. Any unauthorized alteration, forgery or falsification of the content or appearance of this document is unlawful and offenders may be prosecuted to the fullest extent of the law. Unless otherwise stated the results shown in this test report refer only to the sample(s) tested .
Attention: To check the authenticity of testing /inspection report & certificate, please contact us at telephone: (86-755) 8307 1443, or email: CN.Doccheck@sgs.com

SGS-CSTC Standards Technical Services Co.,Ltd. Ningbo Branch Chemical Laboratory
No.1177, Lingyun Road, Hi-Tech Zone, Ningbo, Zhejiang, China 315040 t E&E (86-574)89070249 www.sgsgroup.com.cn
中国·浙江·宁波高新区凌云路1177号 邮编: 315040 t HL (86-574)89070271 t ML (86-574)89070242 sgs.china@sgs.com

Member of the SGS Group (SGS SA)

SGS

检测报告 编号: NGBEC2200904704 日期: 2022年05月17日 第5页,共7页

附件

元素(IEC62321) 测试流程图

1)样品按照下述流程被完全消解

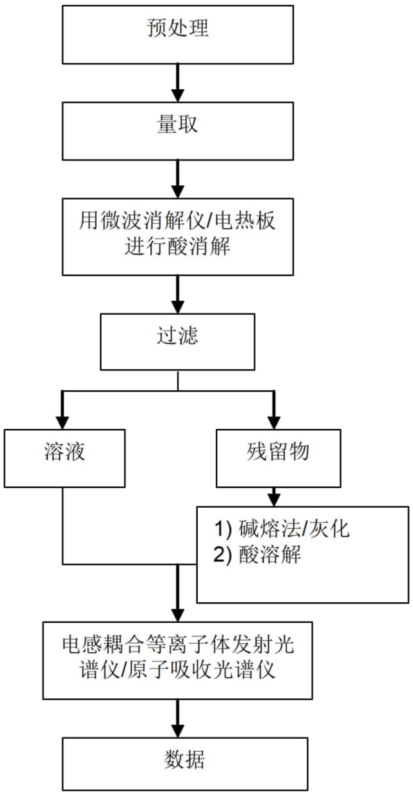

Unless otherwise agreed in writing, this document is issued by the Company subject to its General Conditions of Service printed overleaf, available on request or accessible at http://www.sgs.com/en/Terms-and-Conditions.aspx and, for electronic format documents, subject to Terms and Conditions for Electronic Documents at http://www.sgs.com/en/Terms-and-Conditions/Terms-e-Document.aspx. Attention is drawn to the limitation of liability, indemnification and jurisdiction issues defined therein. Any holder of this document is advised that information contained hereon reflects the Company's findings at the time of its intervention only and within the limits of Client's instructions, if any. The Company's sole responsibility is to its Client and this document does not exonerate parties to a transaction from exercising all their rights and obligations under the transaction documents. This document cannot be reproduced except in full, without prior written approval of the Company. Any unauthorized alteration, forgery or falsification of the content or appearance of this document is unlawful and offenders may be prosecuted to the fullest extent of the law. Unless otherwise stated the results shown in this test report refer only to the sample(s) tested .
Attention: To check the authenticity of testing /inspection report & certificate, please contact us at telephone: (86-755) 8307 1443, or email: CN.Doccheck@sgs.com
检验检测专用章 Inspection & Testing Services
SGS-CSTC Standards Technical Services Co.,Ltd. Ningbo Branch Chemical Laboratory
No.1177, Lingyun Road, Hi-Tech Zone, Ningbo, Zhejiang, China 315040 t E&E (86-574)89070249 www.sgsgroup.com.cn
中国·浙江·宁波高新区凌云路1177号 邮编: 315040 t HL (86-574)89070271 t ML (86-574)89070242 sgs.china@sgs.com
Member of the SGS Group (SGS SA)

SGS

检测报告 编号: NGBEC2200904704 日期: 2022年05月17日 第6页,共7页

附件

六价铬测试流程图

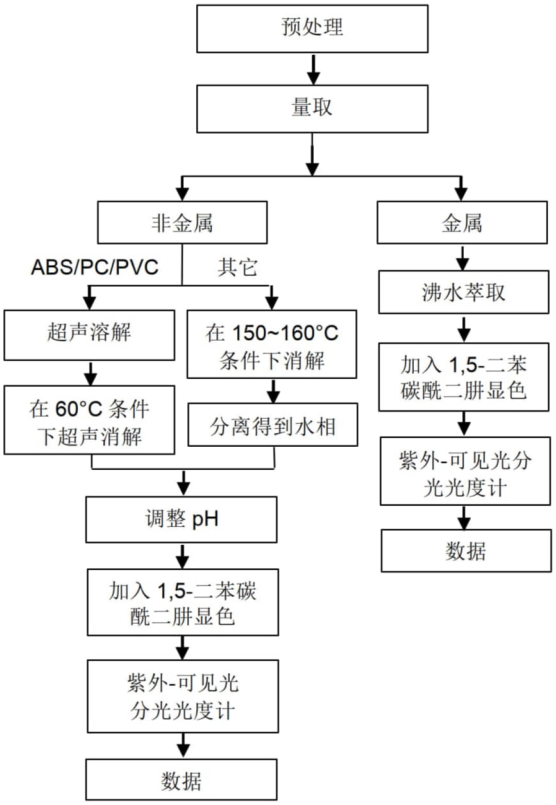

Unless otherwise agreed in writing, this document is issued by the Company subject to its General Conditions of Service printed overleaf, available on request or accessible at http://www.sgs.com/en/Terms-and-Conditions.aspx and, for electronic format documents, subject to Terms and Conditions for Electronic Documents at http://www.sgs.com/en/Terms-and-Conditions/Terms-e-Document.aspx. Attention is drawn to the limitation of liability, indemnification and jurisdiction issues defined therein. Any holder of this document is advised that information contained hereon reflects the Company's findings at the time of its intervention only and within the limits of Client's instructions, if any. The Company's sole responsibility is to its Client and this document does not exonerate parties to a transaction from exercising all their rights and obligations under the transaction documents. This document cannot be reproduced except in full, without prior written approval of the Company. Any unauthorized alteration, forgery or falsification of the content or appearance of this document is unlawful and offenders may be prosecuted to the fullest extent of the law. Unless otherwise stated the results shown in this test report refer only to the sample(s) tested .
Attention: To check the authenticity of testing /inspection report & certificate, please contact us at telephone: (86-755) 8307 1443, or email: CN.Doccheck@sgs.com
SGS-CSTC Standards Technical Services Co.,Ltd. Ningbo Branch Chemical Laboratory
No.1177, Lingyun Road, Hi-Tech Zone, Ningbo, Zhejiang, China 315040 t E&E (86-574)89070249 www.sgsgroup.com.cn
中国·浙江·宁波高新区凌云路1177号 邮编: 315040 t HL (86-574)89070271 t ML (86-574)89070242 sgs.china@sgs.com
Member of the SGS Group (SGS SA)

检测报告 编号: NGBEC2200904704 日期: 2022年05月17日 第7页,共7页

样品照片:

NGB22-009047.001

此照片仅限于随SGS正本报告使用

*** 报告完 ***

Unless otherwise agreed in writing, this document is issued by the Company subject to its General Conditions of Service printed overleaf, available on request or accessible at http://www.sgs.com/en/Terms-and-Conditions.aspx and, for electronic format documents, subject to Terms and Conditions for Electronic Documents at http://www.sgs.com/en/Terms-and-Conditions/Terms-e-Document.aspx. Attention is drawn to the limitation of liability, indemnification and jurisdiction issues defined therein. Any holder of this document is advised that information contained hereon reflects the Company's findings at the time of its intervention only and within the limits of Client's instructions, if any. The Company's sole responsibility is to its Client and this document does not exonerate parties to a transaction from exercising all their rights and obligations under the transaction documents. This document cannot be reproduced except in full, without prior written approval of the Company. Any unauthorized alteration, forgery or falsification of the content or appearance of this document is unlawful and offenders may be prosecuted to the fullest extent of the law. Unless otherwise stated the results shown in this test report refer only to the sample(s) tested .
Attention: To check the authenticity of testing /inspection report & certificate, please contact us at telephone: (86-755) 8307 1443, or email: CN.Doccheck@sgs.com
SGS-CSTC Standards Technical Services Co.,Ltd. Ningbo Branch Chemical Laboratory
No.1177, Lingyun Road, Hi-Tech Zone, Ningbo, Zhejiang, China 315040 t E&E (86-574)89070249 www.sgsgroup.com.cn
中国·浙江·宁波高新区凌云路1177号 邮编: 315040 t HL (86-574)89070271 t ML (86-574)89070242 sgs.china@sgs.com
Member of the SGS Group (SGS SA)

产品名称： PA66 版本日期：15/03/2017

化 学 品 安 全 说 明 书

MSDS

第一部分：化学制品、产品或公司信息

产品名称： PA66
产品别名：聚酰胺
责任方：浙江联和电子有限公司
一般用途:工程热塑性塑料

MSDS编号: PA66

第二部分：合成物或成分信息

组成部分：成分 CAS号码基础树脂 32131-17-2这是一种聚合物材料。所有成分和聚合物系统紧密结合，因此，目前正常的加工和处理情况下没有存在接触的可能性。本产品可能含有专利成分。根据美国《职业安全与卫生条例》，本产品没有被归类为危险品，此化学品安全说明书包含关于安全处理和合理使用本产品的有价值的重要信息。该说明书应妥善保管以便员工或其他使用该产品的用户使用。本产品不受加拿大《工作场所危险物质信息系统》管制。

第三部分：危险鉴定

紧急情况概述：轻微的不规则颗粒物状。燃烧分解可能会产生有危害性的气体基础树脂粉尘或粉末在美国矿务局相关粉尘爆炸的危害等级为低级。熔料可能会导致皮肤或眼睛接触性的热灼伤。此外，溢出的固体硬颗粒可能会造成滑倒的危险。

潜在健康影响：接触方式:皮肤和眼睛接触；气体吸入，如果温度过热的话。征兆症状：没有相关的具体资料。

即刻健康影响：
皮肤：本产品没有相关的具体资料。产品中可能含有的聚合物颗粒和纤维增强也可能会造成机械性的伤害。热性或熔化材料有潜在的可能导致热灼伤。
眼睛:本产品没有相关的具体资料。产品中可能含有的聚合物颗粒和纤维增强也可能会造成机械性的伤害。

吸入：	本产品没有相关的具体资料。从供应的形式来看，本产品不存在被吸入的危险；然而聚合物颗粒可能被认为一种是惰性的微害微粒。加热过程中可能会有产生刺激性气体的危险。
摄入：	本产品没有相关的具体资料。但是，基于高分子聚合物的生物活性，摄取本产品预计会造成轻微的毒性。
长期或滞后影响：	没有相关的具体资料。
致癌性：	国际癌症研究机构（ IARC）曾评估过本产品中可能含有的碳黑，并发现它可能对人类有致癌性（ 2B组）。本产品中的任何碳黑成分都被聚合物体系紧密结合，因此，目前正常的加工和处理情况下致癌的几率很小。
医疗条件	
风险加剧：	本产品没有相关的具体资料。废气可能会被释放，如果过热的话，会影响那些有呼吸系统慢性疾病的人。

第四部分：急救措施

皮肤：如果烫的或熔化的聚合物或者热气接触皮肤，迅速用冷水降温。如果聚合物被粘在皮肤上，不要擅自去除，但是允许粘附的聚合物自然脱落，应寻求医学处理。相比聚合物随着时间推移自行脱落而言，擅自去除粘在皮肤上的聚合物，可能会造成更多的组织损伤。

眼睛：用大量的水冲洗。如果仍旧不舒适，应寻求医疗处理，去除异物。

吸入：转移到空气新鲜之处。如果呼吸困难的情况仍然发生，应寻求医学处理。

摄入：如果相当数量的本产品被吞咽，应饮用两杯水来稀释，并寻求医学处理。

医生注意事项：本产品本质上是惰性和无毒的。然而，如果被加热到高温或被燃烧，可能会有气体排放出来（见第五和第十部分的气体排放）。在这些排放的气体中，一氧化碳和一氧化氮昀有可能具有显著的临床毒性。那些曾暴露在有毒气体中的患者需要检查碳氧血红蛋白水平和动脉血气。如果一个酸中毒患者的碳氧血红蛋白水平是正常的，考虑氰化物毒性。如果患者与气体的接触发生在密闭空间内，则存在窒息（二氧化碳逐渐替代氧气）发生的可能性。一氧化氮对呼吸道有着强烈的刺激性。如果患者可能已经吸入高浓度和刺激性的烟雾，应考虑监测肺水肿病延后发生的可能。

第五部分：救火措施

闪点:不适用
危险燃烧产物：一氧化碳、二氧化碳和氮氧化物
灭火介质：水、泡沫材料、二氧化碳或干化学制
剂灭火指南：消防人员应携带自给式呼吸器和全套防护服。消防人员避免逆风救火。水应该用来给火灾中各种容器的降温。水、泡沫和干化学制剂可能会对电器设备造成损伤。

第六部分：意外泄漏对策

泄漏处理程序：用适当工具清扫泄漏场所，收集泄漏物料，以便恢复和处理。

第七部分：处理和储藏

处理：没有合适的器械，不要处理烫的或者熔化的物料。工作场所应保持整洁有序。不要超过推荐的温度，使分解产物的释放昀小化。不要在有聚合物粉尘存在的场所抽烟。在传输和加工的过程中，应采取恰当的措施控制粉尘的产生和积累。
储藏：储藏在阴凉干燥的场所，保证树脂的干燥度。

第八部分：接触控制 /个人防护

工程控制：局部排气：建议在适当的时候以控制员工接触粉尘或蒸汽。总体而言，作为控制员工暴露在粉尘或者蒸汽中的唯一手段，此办法恐怕不能满足需要。
装备推荐：
皮肤：加热或熔化过程中，有机会接触物料时应穿着长裤、长袖、隔
热手套和面罩。
眼睛：推荐安全眼罩。
吸入：如果粉尘或分解气体的产生有可能高于所允许接触的上限值，推荐使用经国家职业安全与健康研究所认证的防毒面罩 /口罩。

接触指导方针 :本产品中可能含有的任何玻璃颗粒被聚合物系统紧密结合。残留的玻璃颗粒（<1%）可能存在，导致机械性的眼部、皮肤和呼吸刺激。包括机械加工或磨削在内的操作或部分应加以审查，以确保颗粒水平低于推荐的标准，本产品可能含有炭黑。见下列的接触极限值。

成分	机构	参数
炭黑	美国职业安全与健康条例 -允许接触极限	3.5 mg/cu m
	美国政府工业卫生专家会议 -临界值限定	3.5 mg/cu m
微害惰性粉尘	美国职业安全与健康条例 -允许接触极限	15 mg/cu m (全部) 5 mg/cu m (可吸入)
微害颗粒/微粒	美国政府工业卫生专家会议 -临界值限定	10 mg/cu m (全部) 3 mg/cu m (可吸入)

第九部分：物理和化学特性

外观：颗粒状物
气味：轻微的典型气味
物理状态：固态
气压：不适用
熔点（树脂）： 265℃（509℉）
溶解性：可忽略不计 <0.1%（水）
比重： 1.40~1.50
挥发率：<0.5按重量计

第十部分：稳定性和反应性

化学稳定性：在通常使用和储存条件下保持稳定
避免条件：燃烧：不要加热超过 650℉（ 343℃）。避免长时间暴露在温度高于 600℉（316℃）的环境。
不能共存性：强酸和氧化剂
危险分解物：一氧化碳、氨 /氨水、脂族胺、氨基化合物/酰胺、酮、腈和氢氰酸。
危险聚合反应：不会发生。

第十一部分：毒物学信息
本产品没有相关的具体资料。

第十二部分：生态学信息

生物毒性：对于树脂颗粒可能被野生动物摄入所造成的影响，我们还不是很清楚。如果是海鸟，一些海洋生物学家认为，鸟类消化道可能无法让塑料颗粒通过。因此，大量摄入颗粒可能会导致肠堵塞，饱食的错觉或营养吸收的减少，从而导致营养不良和饥饿。由塑料工业协会的发起的'彻底清除行动'（OCS）的目标就是实现塑料颗粒零损失，防止其输入环境。
环境结果/信息：此材料被认为是不可生物降解的。

第十三部分：处置条件
处置：鼓励回收。按照当地政策法规处置本产品。

第十四部分：运输信息
不适用

第十五部分：法规信息

<美国>《有毒物质管理法》：
本产品的所有成分符合有毒物质管理法目录条例。
<美国>《超级基金增补和再授权法案》： 本产品不包含任何受限于《紧急规划和社区知权法》（1986）第 313章和《联邦法规汇编》第 40标题第 372部分中的报告规定的有毒化学物质。

第十六部分：其它信息

危害等级：	健康	可燃性	反应性	其它
国家防火协会	1	1	0	
危险物质鉴别系统	1	1	0	

否认声明： 本产品不适用于作为医学或牙科植入物的使用。为获取详细的工艺指导和良好的生产实践（净化、工艺参数、停炉等），请参阅相应的大赛璐公告。据我们所知，这里所含的信息是正确的。我们没有暗示或者保证此文件所列出的危险已经包含全部危险。大赛璐不做任何关于在你方工艺或与其他物质结合过程中安全使用本产品的明示或暗示性的保证。本产品的使用效果可能会因为其他材料的使用而恶化；或者说本产品可能增强，也可能恶化其他材料的使用效果。用户有其责任对任何使用或者使用方式加以仔细考虑并确定物料的适用性。用户必须符合所有适用的安全和健康标准。

编号：LHES006

MSDS

1. 物品成分与厂商资料	
厂商名称：浙江联和电子有限公司	物品编号：QSN6.5-0.1
	物品名称：磷铜端子
	纯物质：
	危害物质成分（%）无

2.成份辨识资料

成份名称	化学文摘社登记号码(CAS No.)	浓度范围（成分百分比 Percentage (%)
铜(Cu)	7440-50-8	余量
磷(P)	7723-14-0	0.0026-0.005%
锌(Zn)	7440-66-6	0.03-0.04%
镍(Ni)	7440-02-0	0.054-0.063%
锑（Sb）	7440-36-0	0.00015%
铅(Pb)	7439-92-1	＜0.005%
铁(Fe)	7439-89-6	0.005-0.0059%
纯镍(Ni)	7440-02-0	0.054-0.063%
纯锡(Sn)	7440-31-5	6.2 %

2. 危害辨认资料	
严重危害效应	健康危害效应：本产品在固体时不具健康危害及危害
	环境影响：本产品在固体时对环境不具影响
	物理性及化学性危害:固体/无味/多色
	特殊危害：固体时（防火或高温）无特殊危害
主要症状：无	

3. 急救措施	
急救方法	吸入：无吸入
	皮肤接触：接触无危害
	食入：无食入
主要症状及危害效应：无	

4. 灭火措施
通用灭火器：二氧化碳，泡沫，干粉化学灭火器，水雾等
灭火时可能遭遇之特殊危害：会引起火灾
消防人员之特殊防护装备：使用从氧式吸防护具

5. 泄漏处理方法
个人应注意事项：注意工作台面清洁，作业时及时清洗手
环境注意事项：将泄漏之物料以容器盛装以便回收或废弃
清理方式：工作台面每天作业前/后须檫试干净，建议可以戴手套或手指套作业

6. 安全处置与储存方法
处置：废弃物可送到政府许可的废弃物处理中心进行处理

储存：空调仓，23±5℃，湿度 65%以下，仓库里面安装灭火器		
7. 暴露预防措施		
个人防护设备	呼吸防护：口罩，一般无此要求，可以建议采用	
	手部防护设备：手套火手指套，一般无此要求，可以建议采用	
	眼睛防护：安全目镜或眼镜	
	皮肤及身体防护：穿工作服，经常勤洗	
卫生措施：建议使用安全目镜，进食前应洗手及脸部，平时多运动，保持健康体力		
8. 物料及化学性质		
物质状态：固体	形状：连接器	
颜色：多色	气味：无味	
PH 值：未测定	沸点：未测定	
分解温度：未测定	爆炸介限：无	
自然温度：固体无	溶解度：固体无	
9. 安全性及反应性		
安全性：正常状态下安全		
特殊状况下可能之危害反应：无		
应避免之状况：避免接触火源和太阳光直照射		
应避免之物质：火和酸碱性物质		
危害分解物：无		
10. 毒性资料		
急毒性	吸人：无	
	皮肤接触：无	
	眼睛：无	
局部效应：无		特殊效应：无
11. 废弃物处理方法：废弃物可送到政府许可的废弃物处理中心进行处理		
12. 运送资料		
联合国编号：无		运输规定：并无危险分类
运送方法及注意事项：勿重压，轻拿轻放		
13. 适用法规：1.劳工安全卫生设施规划；2.危害物及有害物通讯规划；3.索尼环境通用规定；4 劳工用业环境空气中有害物容许溶度标准；5 道路交通安全规划		
14. 其他资料：		
15.法规资料		
适用法规	1.劳工安全卫生设施规则 2.RoHS 法规及有害物通识规则	
16.其它资料		
参考文献	有害化学物质中文资料库，环保局	
制表单位	浙江联和电子有限公司	
制造商及供应商地址	浙江省温州乐清市乐清湾港区创新路8号	
电话	0577-62383699	
制表者	季育文	
制表日期	2022-3-23	