承　认　书
SPECIFCATION FOR APPROVAL

客户名称 CUSTOMER: _____

品名 DESCRIPTION: B76201型连接器

料号 CUSERTOMER PART NO: B76201

客户确认 APPROVED SIGNATURES

核准 APPROVAL: _____ 日期 DATE: _____

工程 ENGINEERING: _____ 日期 DATE: _____

品管 QC: _____ 日期 DATE: _____

承认结果: ☐ 承认 ☐ 不承认 ☐ 重新送样

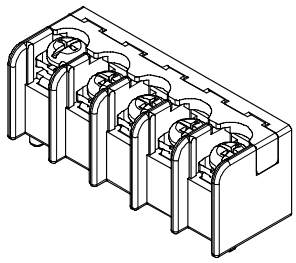

规格 Specifications

1. 极数 Poles: 2/5P
2. 额定电流 Current rating: 20.0A AC,DC
3. 额定电压 Voltage rating: 250V AC,DC
4. 温度范围 Temperature range: -25°C to +105°C
   (含通电温度上升值)
   (Including temperature rise in applying electrical current)
5. 接触电阻 Contact resistance: 初期 Initial value / /
   环境测试后 After environmental testing / /
6. 绝缘电阻 Insulation resistance: > 500MΩ
7. 耐电压 Withstanding voltage: 2500V AC/minute
8. 适用线规 Applicable wire: /
9. 适用基板厚度 Applicable PC board thickness: /
10. 螺丝扭矩 Screw torque:0.5N.m

目录(COVER) 1

料号说明(DESCRIPTION OF ITEM NUMBER) 2

图纸(DRAWING) 5

产品性能测试(PERFORMANCE TEST) 8

认证(CERTIFICATION) 13

PBT RoHS 报告(PBT RoHS REPORT) 21

端子 RoHS报告(TERMINAL RoHS REPORT) 31

MSDS 39

反馈与建议(FEEDBACK AND SUGGESTIONS) 44

制订 Edit:	王夫	日期 DATE:	2024-04-26
审核 Check:	天琴	日期 DATE:	2024-04-26
批准 Approval:	季育文	日期 DATE:	2024-04-26

壳体料号说明 HOUSING

B 76201 - S H B 02 X2 - N* - * - ** - ** - ** - **

A: Wire to Board Connectors
B: Board-in Connectors
C: Wire to Wire Connectors
D: Hard Splices Connectors
F: FFC/FPC Connectors
I : IDC

系列号 Series Number

特征类别(默认空)
Feature Category: S=锁片型

产品类别
Product Category: F=配件 Fitting
H=壳体 Housing
P=密封件 Water Proofing

同类别多型号序号 (默认空)
Same Series Different Type: B~ZZ

单列极数 The Pin Number of Single Row: 01~**

多列列数 The Pin Number of Several Row: X2~X* (无则空)

M为堵孔，*为堵孔序号(例M1.2.5)(无则空)

壳体材料
Housing Material: 9=U=UL
1=PA66
2=PA66灼热丝-G
3=PA46
4=PA6T
5=PA9T
6=PBT
7=PPO
8=LCP
10=PC
11=PA66无卤灼热丝
12=PA66高灼热丝B
13=PA66增强

壳体材料特性
Housing Material Specialty: ZG=灼热丝加玻纤
V2 UL阻燃等级标准(默认不注明)
V0 UL阻燃等级标准
Z=灼热丝是按照(IEC60695/GB/T5169)标准,
符合GWIT750℃,GWFI960℃

壳体颜色
Housing Color: TG=透明绿 Transparent Green
OR=橙色 Orange
P=粉色 Pink
R=红色 Red
VI=紫色 Violet
Y=黄色 Yellow
GY=灰色 Gray
BK=黑色 Black
G=绿色 Green
BL=蓝色 Blue
BR=棕色 Brown
TR=透明白 Transparent
W=白色 White
EC=米白 ECRU
壳体材料2/3/4/5/8/12默认米色
壳体材料7默认黑色
壳体材料1/6/9/10/11默认白色
壳体材料13默认透明
(默认可为空)

无卤标识
无卤产品加HF,有卤默认为空

客户专用代码
Customer Special Code: 表示和常规件不同,用来代表某个客户

备注:*部分内容只在产品标签中体现! 其他特殊要求位置不固定

针座料号说明 WAFER

B 76201 - DHWVB 02 X2 - N* - C* - ** - ** - * - ** - ** - ** - ** - **

A: Wire to Board Connectors
F: FFC/FPC Connectors
I : IDC

系列号 Series Number

DB=防呆柱+全包
B=全包 All inclusive
DH=防呆柱+高背型
特征类别(默认空)H=高背型 High box type
Feature Category: D=固定防呆柱 Fixed

WV=直针座 Straight Angle
WR=弯针座 Right Angle
产品类别 SV=立贴式 V-SMT
Product Category: SR=卧贴式 R-SMT

同类别多型号序号 (默认空)
Same Series Different Type: B~ZZ

单列极数 The Pin Number of Single Row: 01~**

多列列数 The Pin Number of Several Row: X2~X* (无则空)

N为缺针,M为堵孔,*为序号(例N1.2.5)(无则空)

C为插针样式不同(除打点、缺针外)*为序号(无则空)

打点样式
Point Style:K为打点,K2.4表示在第2枚,第4枚上打点,默认打点无数字标注(无则空)

接触件材料 P=磷青铜 Phos.Bronze
Contact Material: B=黄铜 Brass

0=素材酸洗 None
1=镀镍 Nickel Plating
2=镀亮锡 Tin Plating
3=镀镍氩光锡 Matt Tin-Nickel Plating
4=镀铅锡 Tin-Lead Plating
5=镀铜锡 Tin-Cu Plating
6=镀镍银 Silver-Nickel Plating
7=镀镍金 Gold-Nickel Plating
8=镀镍局部金 Half Gold-Nickel Plating
表面处理 9=镀亮锡局部金 Half Gold-Tin Plating
Surface Processing: 10=镀镍亮锡 Tin-Nickel Plating (A5001默认B3)

1=PA66	6=PBT	11=PA66无卤灼热丝
2=PA66灼热丝-G	7=PPO	12=PA66高灼热丝B
3=PA46	8=LCP	13=PA66增强
壳体材料 4=PA6T	9=U=UL	
Housing Material: 5=PA9T	10=PC	

V2 UL阻燃等级标准(默认不注明)
V0 UL阻燃等级标准
Z=灼热丝是按照(IEC60695/GB/T5169)标准,
壳体材料特性 符合GWIT750°C,GWFI960°C
Housing Material Specialty: ZG=灼热丝加玻纤

其他特殊要求
Other Special Requirements: 如:SE(对固定力要求高5N)

OR=橙色 Orange
P=粉色 Pink
R=红色 Red
VI=紫色 Violet
Y=黄色 Yellow
GY=灰色 Gray
BK=黑色 Black
G=绿色 Green
BL=蓝色 Blue
BR=棕色 Brown

TR=透明白 Transparent	壳体材料2/3/4/5/8/12默认米色
W=白色 White	壳体材料7默认黑色
壳体颜色 EC=米白 ECRU	壳体材料1/6/9/10/11默认白色
Housing Color: TG=透明绿 Transparent Green	壳体材料13默认透明 (默认可为空)

无卤标识
无卤产品加HF,有卤默认为空

客户专用代码
Customer Special Code: 表示和常规件不同,用来代表某个客户

备注:*部分内容只在产品标签中体现! 其他特殊要求位置不固定

B76201料号说明 Description of item number

端子料号说明 TERMINAL

B 76201 N - T 2 2 A 30 5 P 2(*) Y - 1 - * (*) *

A: Wire to Board Connectors
B: Board-in Connectors
C: Wire to Wire Connectors
F: FFC/FPC Connectors
I : IDC
D: Chain Terminals and Splices

系列号 Series Number

K=直形带锁 N=直形
Z=旗形带锁 Q=旗形
X=横插带锁 H=横插
Y=叉形端子 J=插片
R=环形端子 C=圆形
G=接线端子
W=鲨鱼齿端子
特征类别(默认空) B=子弹形端子
Feature Category: U=耳扒形端子

产品类别 Product Category: T=端子 Terminal

同类别多型号序号 (默认空)
Same Series Different Type: 1~9

同型号多尺寸序号 (默认空)
Same Type Different size: 1~9

适用线规(默认空) A=小脚 B=中脚
Applicable Wire: C=高脚 D=大脚

料带厚度单位: mm X100 (0.3X100=30 默认空)

配合厚度单位: mm X10 (0.5X10=5 默认空)
注: 所有<灰色>说明, 为D系列分类附加料号及说明!

Z=紫铜 Copper
S=不锈钢 Stainless Steel
P=磷青铜 Phos.Bronze
材质 Material: B=黄铜 Brass

0=素材酸洗 None
1=镀镍 Nickel Plating
2=镀亮锡 Tin Plating
3=镀镍氩光锡 Matt Tin-Nickel Plating
4=镀铅锡 Tin-Lead Plating
5=镀铜锡 Tin-Cu Plating
6=镀镍银 Silver-Nickel Plating
7=镀镍金 Gold-Nickel Plating
8=镀镍局部金 Nickel-Gold
表面处理 9=镀亮锡局部金 Half Gold-Tin Plating
Surface processing: 10=镀镍亮锡 Tin-Nickel Plating

镀层厚度(默认为空)

包装说明: Y=有字、N=无字

包装方式: 0=散装(袋装)、1=盘装、4=八角盘装、5=编带装 (常规默认为空)

包装数量: -**K: 客户定制数量,默认数量为空

客户专用代码
Customer Special Code: 表示和常规件不同,用来代表某个客户

其他说明: 如(U)=UL、软、低铅等

备注:表面处理内容只在产品标签中体现! 其他特殊要求位置不固定

其它料号说明 OTHER

P 0001 - B

P: Other Types

产品序号 Product Number

同型号序号 Same Series Different Type: B~Z
(默认空)

B76201型连接器承认书图面

序号	名　　称	材　　料	数量	图　　号	附　　注
1	基座 Housing	PBT	1	LHE\GC-5	Black(黑色)
2	上盖	PBT	1		Black(黑色)
3	接线端子	C2680R-1/2h	2		电镀SN
4	接线螺丝	M3X0.5PX6L	2		6.2电镀ZnNi

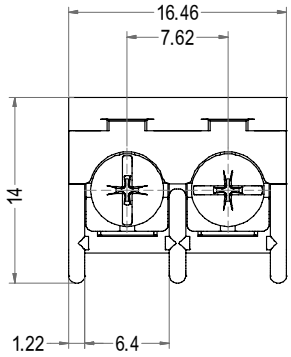

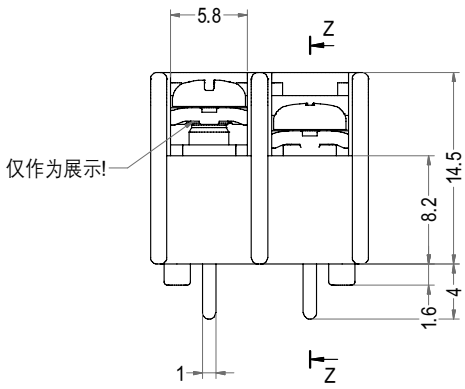

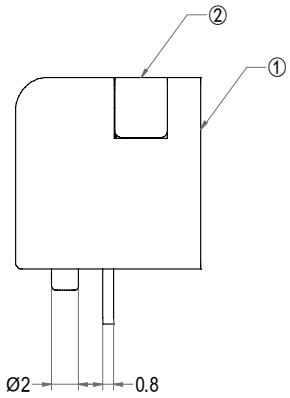

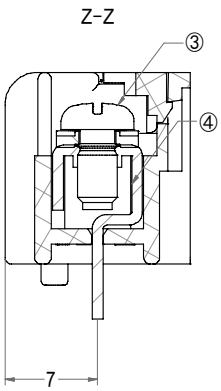

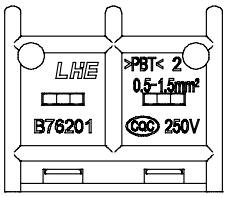

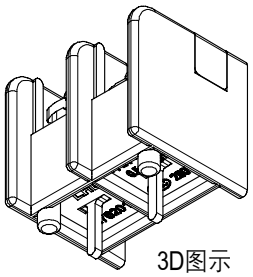

3D图示

Poles	Part No.	Description
2	B76201-WV02	B76201-2A

LHE® 浙江联和电子有限公司			
品名	B76201-2A	比例	7 : 4
料号	B76201-WV02	未注公差(mm)	
图号	LHE\GC-5	2 < XX ≤ 50	±0.4
材料	PBT	50 < XX ≤ 100	±0.8
制图	王天2024-04-26	100 < XX	±1.2
审核	天琴2024-04-26		
批准	季育文2024-04-26	X°	±3°
视角		X.X°	±0.5°

B76201型连接器承认书图面

序号	名　　称	材　　料	数量	图　　号	附　　注
1	基座 Housing	PBT	1	LHE\GC-6	Black(黑色)
2	上盖	PBT	1		Black(黑色)
3	接线端子	C2680R-1/2h	5		电镀SN
4	接线螺丝	M3X0.5PX6L	5		6.2电镀ZnNi

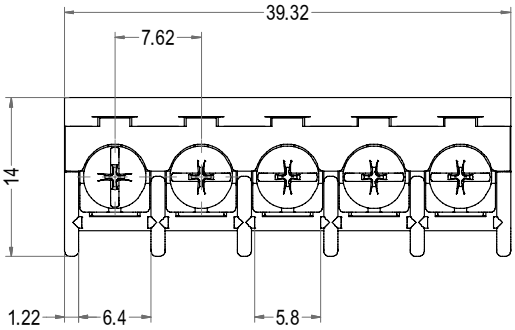

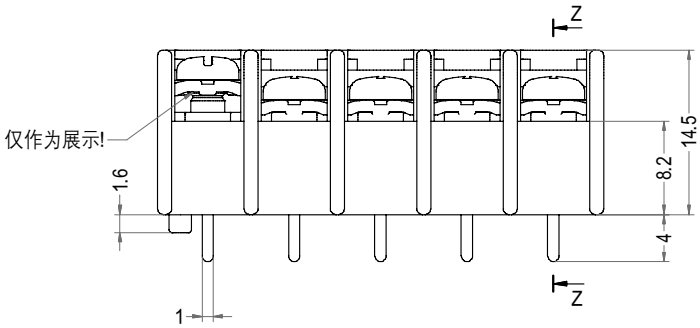

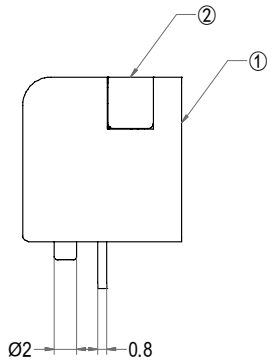

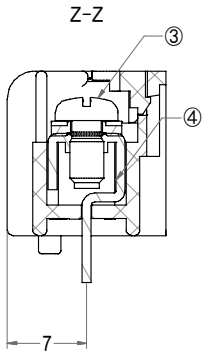

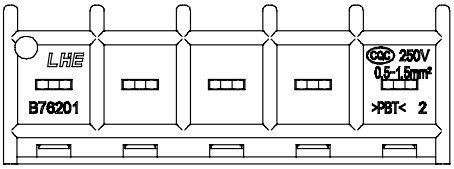

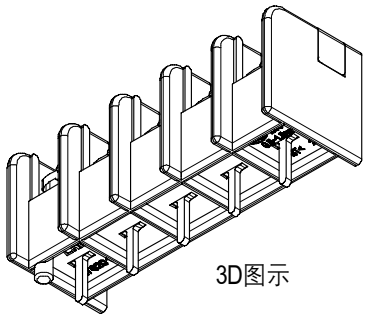

3D图示

Poles	Part No.	Description
5	B76201-WV05	B76201-5A

LHE® 浙江联和电子有限公司			
品名	B76201-5A	比例	3 : 2
料号	B76201-WV05	未注公差(mm)	
图号	LHE\GC-6	2 < XX ≤ 50	±0.4
材料	PBT	50 < XX ≤ 100	±0.8
制图	王天 2024-04-26	100 < XX	±1.2
审核	天琴 2024-04-26		
批准	季育文 2024-04-26	X°	±3°
视角		X.X°	±0.5°

B76201型连接器承认书图面

名　　称	材　　料	图　　号	附　　注
端子 Terminal	Phosphor Bronze	LHE\GC-7	

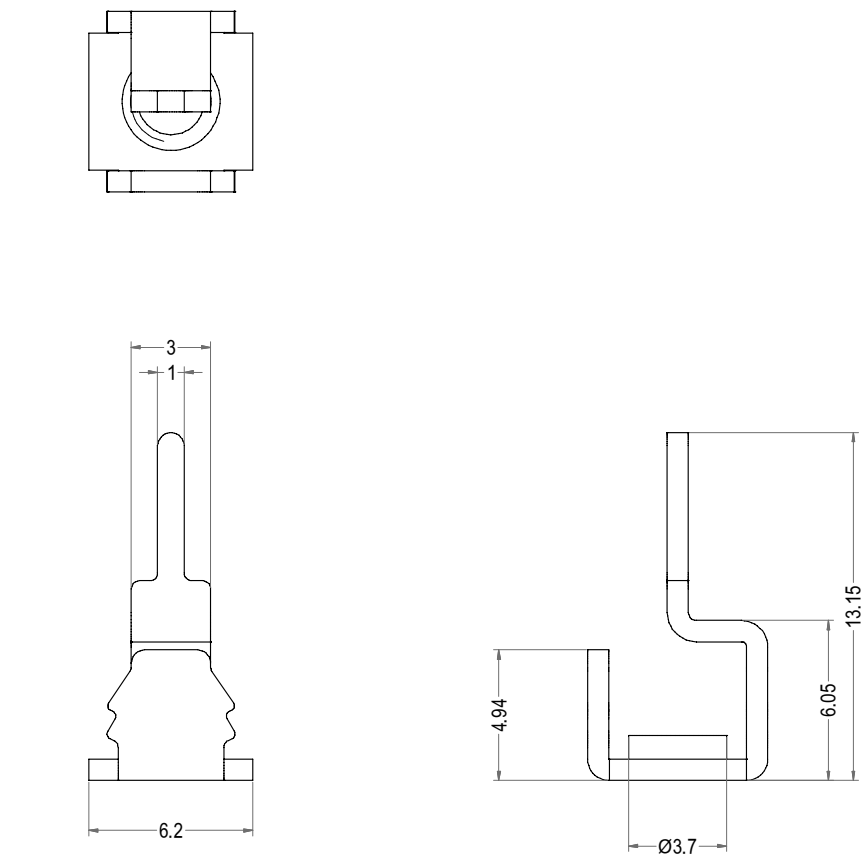

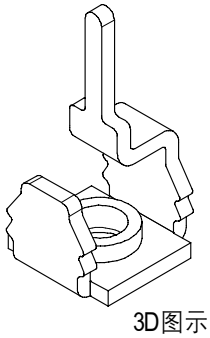

3D图示

Part No.	Description
B76201-TP	B76201-T

LHE® 浙江联和电子有限公司			
品名	B76201-T	比例	7 : 2
料号	B76201-TP	未注公差(mm)	
图号	LHE\GC-7	>0~3	±0.12
材料	Phosphor Bronze	>3~18	±0.15
制图	王天2024-04-26	>18~50	±0.3
审核	天琴2024-04-26	>50~120	±0.5
批准	季育文2024-04-26	X°	±3°
视角		X.X°	±0.5°

项目 Item	测试条件 Test Condition	规格要求 Requirement
14.外观 Appearance	目测 Visual by eye 视力 Light: >1.0 照明 Lamp: 200~300Lx 目测距离 Space: 0.3~0.5m GB/T 5095.1 Method 1a	1.塑料件表面应无明显疤痕、凹陷、开裂及影响使用的变形。 Plastic part:smooth and flat surface without discolor,broken,crack distortion defects is acceptable. 2.金属件表面无锈蚀、氧化、无明显的机械损伤等缺陷。 Metal part:btight and even surface without rust,oxide,fog and obvious physical damage defects is acceptable. 3.导线表面清洁、无破损等缺陷,印字及标志清晰。 Wire:clearing surface without discolor,broken defects,indistinct words and mark is acceptable.
2. 壳体/端子固定力 Terminal/Housing Retention Force	固定连接器或测力计, 在连接器轴线方向施加规定的拉力; 速度不大于25mm/min。 Apply axial pull out force at the speed rate of not more 25mm/min on the pin assembled in the housing. GB/T 5095.8 Method 15d/EIA-364-29B	/
3. 插入力与拔出力 Insertion and Withdrawal Force	单PIN相配的接触器以1mm/s~5mm/s的速度沿接插器轴线方向插入和拔出。 Insertion and withdraw single contact at the speed rate of 1mm/s~5mm/s. 相配的连接器以1mm/s~5mm/s的速度沿接插器轴线方向插入和拔出。 Insertion and withdraw connectors at the speed rate of 1mm/s~5mm/s. GB/T 5095.7 Method 13b/EIA-364-13B	极数 Poles: 插入力(最大值N) Insertion(N Max) 1st; 拔出力(最小值N) Withdrawal(N Min) 1st
4. 针的固定力 Pin Retention Force	固定连接器或测力计, 在连接器轴线方向对针施加规定的推力; 速度不大于25mm/min。 Apply axial push out force at the speed rate of not more 25mm/minute on the terminal assembled in the base. GB/T 5095.8 Method 15a/ EIA-364-29B	/
5. 压着部位抗拉强度 Crimping Pull Out Force	在试验装置夹头中固定测试样品, 在连接的轴线方向施加拉力; 速度不大于25mm/min。 Fix the crimped terminal, apply axial pull out force on the wire at the speed rate of not more 25mm/min. GB/T5095.8 Method 16d/EIA-364-08B	

项目 Item	测试条件 Test Condition	规格要求 Requirement	
6. 机械振动 Vibration	插合连接器, 串联在一直流电源上, 电流100mA; 并模拟正常工作状态, 振频为10~55Hz、振幅1.5mm; 每一轴线扫频循环次数10次、2小时。 Frequency: 10~55Hz Amplitude: ±1.5mm Duration: 2 hours in each X,Y,Z axes GB/T 5095.4 Method 6d/EIA-364-28D	外观 Appearance	无损伤 No Damage
7.机械冲击 Shock	连接器相配,沿X,Y.Z三轴正反方向各冲击3次(总共18次), 在测试过程中通以100mA电流。 冲击强度:490m/s² 持续时间:11ms Mated connectors and subject to the following shock conditions,3times of shock shall be applied for each 6 directions along 3 mutually perpendicular axes,passing DC 100mA current during the test(Total of 18 shocks)Test Pulse: Half Sine Peak Value:490m/s² Duration:11ms GB/T 5095.4 Method 6c/EIA-364-27B	接触电阻 Contact Resistance LLCR	/
		中断 Intermittence	≤1μ sec
8. 机械寿命 Repeated insertion/withdrawal	以每分钟插拔10次的速率, 插拔50次。 When mated up to 50 cycles repeatedly by the rate of 10 cycles per minute. GB/T 5095.5 Method 9a/EIA-364-09C	外观 Appearance	无损伤 No Damage
		接触电阻 Contact Resistance LLCR	/
9. 接触电阻 Contact Resistance	插合连接器,用小功率电路进行测试。 Mate connectors,measure by dry circuit. GB/T 5095.2 Method 2a/EIA-364-23B	/	
10. 绝缘电阻 Insulation Resistance	在相邻接触件之间或地线之间, 用500V DC电压进行测试。 Apply 500V DC between adjacent terminal or ground. GB/T 5095.2 Method 3a/EIA-364-21C	> 500MΩ	
11. 耐电压 Dielectric Strength	相邻接触件之间或地线之间施加50Hz 2500V AC(有效值), 漏电流1mA的电压作用, 时间1min。 Mate connectors, apply 2500V AC for 1 minute between adjacent terminal or ground. GB/T 5095.2 Method 4a/EIA-364-20B	无击穿和飞弧现象 No Breakdown	
12. 温度上升 Temperature Rise	插合连接器, 通以最大允许电流。 GB/T 5095.3 Method 5a/EIA-364-70A	温度最大上升 Temperature Rise	≤30℃
13. 耐高温 Heat Resistance	连接器配合后, 于+105℃±2℃的空气中放置96小时, 然后再回到室温中放置1~2小时测定 Mated connectors are exposed to a temperature of +105℃±2℃ for 96 hours. GB/T 5095.6 Method 11i /EIA-364-17B	外观 Appearance	无损伤 No Damage
14. 耐低温 Clod Resistance	连接器配合后, 于-25℃±2℃的空气中放置96小时, 然后再回到室温中放置1~2小时测定 Mated connectors are exposed to a temperature of -25℃±2℃ for 96 hours. GB/T 5095.6 Method 11i /EIA-364-17B	接触电阻 Contact Resistance LLCR	/

项目 Item	测试条件 Test Condition	规格要求 Requirement	
15. 恒定湿热 Humidity	温度 Temperature: 40±2°C 相对湿度 Relative Humidity: 90%~95% 搁置时间 Duration: 96h, 取出恢复2小时后检查 GB/T 5095.6 Method 11c/EIA-364-31B	外观 Appearance	无损伤 No Damage
		耐电压 Dielectric Strength	2500V
16. 温度循环 Temperature cycle	把测试样品放入高低温试验箱中,按下列步骤调试温度: a)在-25°C±2°C的恒温条件下放置0.5小时; b)在+105°C±2°C的恒温条件下放置0.5小时; 从a)到b)为一个循环周期,共进行5个循环。恢复1h后检查。 状态转换时间不多于1小时。 Mated connectors are exposed to 5 cycles of: a)-25°C±2°C 0.5hour b)+105°C±2°C 0.5hour GB/T 5095.6 method 11d/EIA-364-32C	绝缘电阻 Insulation Resistance	> 500MΩ
		接触电阻 Contact Resistance LLCR	/
17.盐雾 Salt Spray	把先冲后镀*的测试样品从试验箱顶悬挂下来, 采用浓度为5%±1(质量百分比)的氯化钠溶液, 连续雾化24小时, 试验后用流动的蒸馏水轻轻洗去表面沉积物。在常温常驻湿条件下恢复1~2小时。 24 hour exposure to a saltspray from the 5%±1 solution. GB/T 5095.6 Method 11f/EIA-364-26B	外观无损伤(五金件应无露出底金属的严重锈蚀; 使用预镀的型材, 其落料面允许有不影响其性能的轻微腐蚀。) Appearance:No Damage(No erosion with material exposed.And with plating material,slight erosion on the cutting surface acceptable)	
18. 可焊性 Solderability	把测试样品需要焊接的部位浸入焊锡炉中 (锡炉温度235°C±5°C)2±0.5秒钟。 Soldering time: 2±0.5 sec Solder Temperature:235°C±5°C GB/T 5095.6 Method 12a/EIA-364-52	上锡率≥90% 90% of immersed area must show no voids,pin holes	
19. 耐焊接热 Resistance to Soldering Heat	把测试样品需要焊接的部位浸入焊锡炉中(锡炉温度260°C±5°C); 5±1秒钟后, 在正常的条件下恢复1小时。 Soldering time: 5±1 sec Solder Temperature:260°C±5°C GB/T 5095.6 Method 12d/EIA-364-56A	外观 Appearance	无损伤 No Damage
20. 灼热丝测试 Glow Wire (只针对GWT750°C产品 Only for GWT750°Cproducts)	750C灼热丝顶部接触试验样品, 接触时间:(30士1) s 接近和离开速率: 10mm/s~25mm/s 灼热丝进入或贯穿试验样品深度:(7士0.5) mm 750'C elow wire contacts with mated connector. Time: (30+1) s Speed of closing to and leaving: 10mm/s-25mm's Depth that glow wire penetrates mated connector: (7-05 mm GB/T 5169.10	1.试验样品燃烧时间不超过2s。 The time that mated connector burns is not more than 2s. 2、灼热丝离开后的30s内样件无火焰或灼热情况, 且无滴落物或滴落物不燃烧。 30s after glow wire leaves mated con nector, it does not burn or is no incand escence and it does not fall something or falling something does not burn.	
21. 耐酸性(二氧化硫) Acid resistance(SO_2)	连接器闭合连接,3±1ppm, 40±2°C.96 小时 Mated connector,3士1ppm,40±2°C Duration 96hours GB/T2423.51	接触电阻 Contact Resistance LLCR	/

项目 Item	测试条件 Test Condition	规格要求 Requirement	
22.氨气测试 Ammonia test	连接器闭合连接，放置于浓度为 25 mL/L的 3%的 NH_3的空气中7小时 Mated connector is put into atmosphere that rated 25 ml/L of 3% NH_3 for 7 hours GB/T2423.51	接触电阻 Contact Resistance LLCR	/

* 先冲后镀为定制端子。常规端子为先镀后冲，无法通过盐雾试验。

制订 Edit: 王夫 日期 DATE: 2024-04-26

审核 Check: 天琴 日期 DATE: 2024-04-26

批准 Approval: 季育文 日期 DATE: 2024-04-26

无铅回流焊要求 Pb-free reflow profile requirements

参数 Parameter	参考 Reference	规格 Specification
平均温度梯度预热 Average Temperature Gradient Preheating		2.5℃/s
浸泡时间 Soak time	tsoak 2-3	minutes
150℃以上时间 Time above 150℃	T1	60s
180℃以上时间 Time above 180℃	T2	50s
250℃以上时间 Time above 250℃	T3	2±0.5s
焊接温度 Peak temperature in reflow	Tpeak	255℃(-0/+5℃)
温度梯度的冷却 Temperature gradient in cooling		Max -5℃/s

温度条件图 TEMPERATURE CONDITION GRAPH

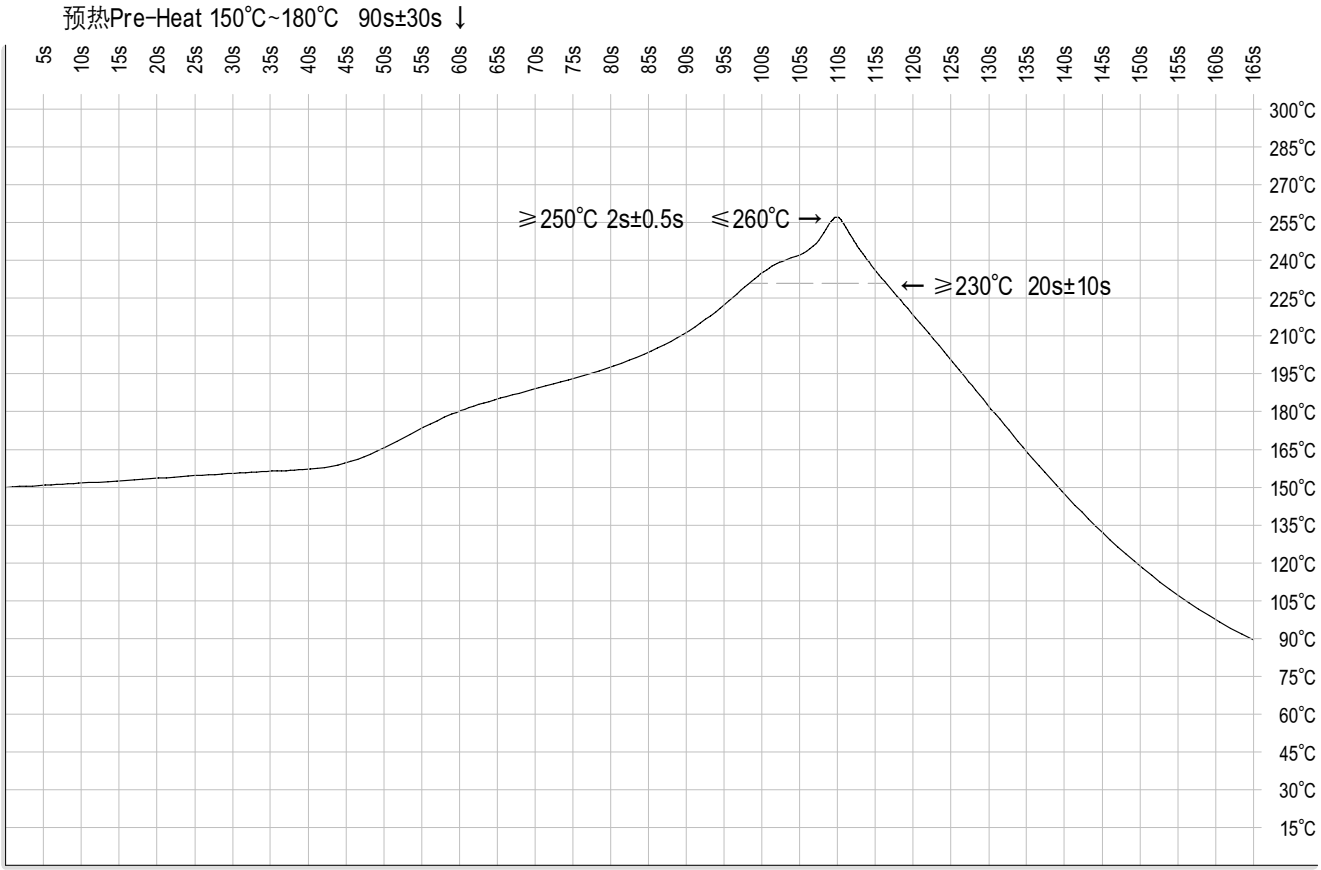

注: 对耐热性的最低要求, 是在回流焊中使用空气对流的传热方法评估焊接部件。 该曲线图表明需要达到规定的空气温度, 而实际过程很大程度上取决于回流焊装置。

Note: The minimum required heat resistance of the section is to evaluate the welded components. Heat transfer method is used for hot air convection in reflow welding. The actual air temperature used to achieve the specified profile depends largely on the reflux device.

UL Product iQ™

ECBT2.E364711 - Connectors for Use in Data, Signal, Control and Power Applications - Component

Connectors for Use in Data, Signal, Control and Power Applications - Component

See General Information for Connectors for Use in Data, Signal, Control and Power Applications - Component

ZHEJIANG LIANHE ELECTRONIC CO LTD E364711
Chuangxin Road, YueQing Bay Port Zone
Yueqing, Zhejiang 325600 CHINA
Connector, Model(s) 1.58-LHE f/b 2 , f/b 1 thru 12, f/b A2 or AW., 1.58-LHE f/b 2 thru 6, f/b A2 or AW

Connector, Model(s) 1.58-LHE followed by 2, followed by 1 thru 12, followed by A(T).

Connector, Model(s) 1.58-LHE, f/b 2 thru 6 , f/b A(T)., 1.58-LHE, f/b 2 thru 6, f/b Y(T), 1.58-LHE, f/b 2, f/b 1 thru 12 , f/b Y(T)., 2510-LHE f/b 2 , f/b 1 thru 12, f/b A2 or AW, 2510-LHE f/b 2 thru 6, f/b A2 or AW

Connector, Model(s) 2510-LHE followed by 2, followed by 1 thru 12, followed by A(T)

Connector, Model(s) 2510-LHE, f/b 2 thru 6 , f/b A(T), 2510-LHE, f/b 2 thru 6, f/b Y(T), 2510-LHE, f/b 2, f/b 1 thru 12 , f/b Y(T), 5.08-LHE f/b 2 , f/b 1 thru 12, f/b A2 or AW, 5.08-LHE f/b 2 thru 6, f/b A2 or AW

Connector, Model(s) 5.08-LHE followed by 2, followed by 1 thru 12, followed by A(T)

Connector, Model(s) 5.08-LHE, f/b 2 thru 6 , f/b A(T), 5.08-LHE, f/b 2 thru 6, f/b Y(T), 5.08-LHE, f/b 2, f/b 1 thru 12 , f/b Y(T), 51005-LHE f/b 2 , f/b 1 thru 12, f/b A2 or AW, 51005-LHE f/b 2 thru 6, f/b A2 or AW

Connector, Model(s) 51005-LHE followed by 2, followed by 1 thru 12, followed by A(T)

Connector, Model(s) 51005-LHE, f/b 2 thru 6 , f/b A(T), 51005-LHE, f/b 2 thru 6, f/b Y(T), 51005-LHE, f/b 2, f/b 1 thru 12 , f/b Y (T), 51006-LHE f/b 2 , f/b 1 thru 12, f/b A2 or AW, 51006-LHE f/b 2 thru 6, f/b A2 or AW

Connector, Model(s) 51006-LHE followed by 2, followed by 1 thru 12, followed by A(T)

Connector, Model(s) 51006-LHE, f/b 2 thru 6 , f/b A(T), 51006-LHE, f/b 2 thru 6, f/b Y(T), 51006-LHE, f/b 2, f/b 1 thru 12 , f/b Y (T), 5102-LHE f/b 2 , f/b 1 thru 12, f/b A2 or AW, 5102-LHE f/b 2 thru 6, f/b A2 or AW

Connector, Model(s) 5102-LHE followed by 2, followed by 1 thru 12, followed by A(T)

Connector, Model(s) 5102-LHE, f/b 2 thru 6 , f/b A(T), 5102-LHE, f/b 2 thru 6, f/b Y(T), 5102-LHE, f/b 2, f/b 1 thru 12 , f/b Y(T), 5240-LHE f/b 2 , f/b 1 thru 12, f/b A2 or AW, 5240-LHE f/b 2 thru 6, f/b A2 or AW

Connector, Model(s) 5240-LHE followed by 2, followed by 1 thru 12, followed by A(T)

Connector, Model(s) 5240-LHE, f/b 2 thru 6 , f/b A(T), 5240-LHE, f/b 2 thru 6, f/b Y(T), 5240-LHE, f/b 2, f/b 1 thru 12 , f/b Y(T), 5500-LHE f/b 2 , f/b 1 thru 12, f/b A2 or AW, 5500-LHE f/b 2 thru 6, f/b A2 or AW

Connector, Model(s) 5500-LHE followed by 2, followed by 1 thru 12, followed by A(T)

Connector, Model(s) 5500-LHE, f/b 2 thru 6 , f/b A(T), 5500-LHE, f/b 2 thru 6, f/b Y(T), 5500-LHE, f/b 2, f/b 1 thru 12 , f/b Y(T), 5557 followed by 2 thru 6, followed by A(T), 5557 followed by 2 thru 6, followed by A2 or AW, 5557 followed by 2 thru 6, followed by Y(T)

Connector, Model(s) 5557 followed by 2, followed by 1 thru 12, followed by A(T).

Connector, Model(s) 5557 followed by 2, followed by 1 thru 12, followed by A2 or AW

Connector, Model(s) 5557 followed by 2, followed by 1 thru 12, followed by Y(T)

Connector, Model(s) 5559-LHE f/b 2 , f/b 1 thru 12, f/b A2 or AW, 5559-LHE f/b 2 thru 6, f/b A2 or AW

Connector, Model(s) 5559-LHE followed by 2, followed by 1 thru 12, followed by A(T).

Connector, Model(s) 5559-LHE, f/b 2 thru 6 , f/b A(T), 5559-LHE, f/b 2 thru 6, f/b Y(T), 5559-LHE, f/b 2, f/b 1 thru 12 , f/b Y(T), 5566-LHE f/b 2 , f/b 1 thru 12, f/b A2 or AW, 5566-LHE f/b 2 thru 6, f/b A2 or AW

Connector, Model(s) 5566-LHE followed by 2, followed by 1 thru 12, followed by A(T)

Connector, Model(s) 5566-LHE, f/b 2 thru 6 , f/b A(T), 5566-LHE, f/b 2 thru 6, f/b Y(T), 5566-LHE, f/b 2, f/b 1 thru 12 , f/b Y(T), 5569-LHE f/b 2 , f/b 1 thru 12, f/b A2 or AW, 5569-LHE f/b 2 thru 6, f/b A2 or AW

Connector, Model(s) 5569-LHE followed by 2, followed by 1 thru 12, followed by A(T)

Connector, Model(s) 5569-LHE, f/b 2 thru 6 , f/b A(T), 5569-LHE, f/b 2 thru 6, f/b Y(T), 5569-LHE, f/b 2, f/b 1 thru 12 , f/b Y(T), 5600-LHE f/b 2 , f/b 1 thru 12, f/b A2 or AW, 5600-LHE f/b 2 thru 6, f/b A2 or AW

Connector, Model(s) 5600-LHE followed by 2, followed by 1 thru 12, followed by A(T)

Connector, Model(s) 5600-LHE, f/b 2 thru 6 , f/b A(T), 5600-LHE, f/b 2 thru 6, f/b Y(T), 5600-LHE, f/b 2, f/b 1 thru 12 , f/b Y(T), 63080-LHE f/b 2 , f/b 1 thru 12, f/b A2 or AW, 63080-LHE f/b 2 thru 6, f/b A2 or AW

Connector, Model(s) 63080-LHE followed by 2, followed by 1 thru 12, followed by A(T)

Connector, Model(s) 63080-LHE, f/b 2 thru 6 , f/b A(T), 63080-LHE, f/b 2 thru 6, f/b Y(T), 63080-LHE, f/b 2, f/b 1 thru 12 , f/b Y (T), B2502 followed by 2 thru 16, followed by Y(T), BH3.5-2A(T), BH3.5-2Y(T), MX3.0 followed by 2 thru 12, followed by A(T), MX3.0 followed by 2 thru 12, followed by A2 or AW, MX3.0 followed by 2 thru 12, followed by Y(T)

Connector, Model(s) MX3.0 followed by 2, followed by 1 thru 12, followed by A(T).

Connector, Model(s) MX3.0 followed by 2, followed by 1 thru 12, followed by A2 or AW

Connector, Model(s) MX3.0 followed by 2, followed by 1 thru 12, followed by Y(T)

Connector, Model(s) PA-LHE f/b 2, f/b 1 thru 12, f/b Y(T), PA-LHE followed by 2 thru 12, followed by A(T)

Connector, Model(s) PA-LHE followed by 2 thru 12, followed by A2 or AW

Connector, Model(s) PA-LHE followed by 2 thru 12, followed by Y(T)

Connector, Model(s) PA-LHE followed by 2, followed by 1 thru 12, followed by A(T)

Connector, Model(s) PA-LHE followed by 2, followed by 1 thru 12, followed by A2 or AW

Connector, Model(s) PH, PHB, XHB, JC25, SCN followed by -2 thru -20, followed by Y(T), A, AW or AWD

Connector, Model(s) PHB followed by 2 thru 16, followed by Y(T). followed by 2 thru 16, followed by AWD, A, AW

Connector, Model(s) Series 1.25, 1254, 1255 followed by -2 thru -25, followed by Y(T), A or AW

Connector, Model(s) Series 5264 followed by -2 thru -16, followed by Y(T), A or AWD

Connector, Model(s) SM followed by -2 thru -18, followed by Y(T) or A(T)

Connector, Model(s) VH, 3.96 followed by -2 thru -16, followed by Y(T), A, AW or AWG

Connector, Model(s) XA-LHE f/b 2, f/b 1 thru 12, f/b Y(T), XA-LHE followed by 2 thru 12, followed by A(T)

Connector, Model(s) XA-LHE followed by 2 thru 12, followed by A2 or AW

Connector, Model(s) XA-LHE followed by 2 thru 12, followed by Y(T)

Connector, Model(s) XA-LHE followed by 2, followed by 1 thru 12, followed by A(T)

Connector, Model(s) XA-LHE followed by 2, followed by 1 thru 12, followed by A2 or AW

Connector, Model(s) XH followed by -2 thru -20, followed by Y(T), A, AW, AWGD, AWD or AWGDJ

Connector, Model(s) ZH followed by 2 thru 16, followed by AWD or A, ZH followed by 2 thru 16, followed by Y(T).

Model(s) 1.25, followed by -2 thru -16, followed by AB or AWB

Model(s) 51146 or FI-S, followed by -2 thru -16, followed by AB or AWB

Model(s) A5001, followed by -2 thru -7, followed by Y, Y(T), AD or AWD

Model(s) B2501-LHE, A2004-LHE, A4203-LHE, PHR-LHE, PHD-LHE, CH2.5-LHE, DF11-LHE, PHSD-LHE, A5001-LHE, 35155-LHE, 35156-LHE, 5195-LHE, 5196-LHE, followed by 2 thru 16, followed by Y(T)

Model(s) BHS-LHE, SMH250-LHE, SMH200-LHE, L6.2-LHE, 1806-LHE, 2060-LHE, 2541-LHE, JC15-LHE, XHD-LHE, followed by -2, followed by A(T), or Y(T)

Model(s) JWPF-LHE, B2541-LHE, NV-LHE, DV-LHE, SGN-LHE, SJN-LHE, SDN-LHE, SIN-LHE, 35150-LHE, 35151-LHE, 35180-LHE, 35182-LHE, 35524-LHE, 35965-LHE, RCY-LHE, LC-LHE, VR-LHE, SHJ-LHE, SHL-LHE, DF19-LHE, ACH-LHE, DF13-LHE, IL-Z-LHE, 51146-LHE, SATA-LHE, XSR-LHE, SUR-LHE, SUH-LHE, ZE-LHE, ZND-LHE, ZPD-LHE, A1502-LHE, SFH-LHE,51004-LHE, PUD-LHE, A20010-LHE, 35507-LHE, DF3-LHE, PND-LHE, RE-LHE,RA-LHE, RF-LHE or A3963, followed by -2 thru -15, followed by Y(T), YB(T) or YC(T), A, A-K, AW, AW-K, AD, AD-K, AWGD, AWGD-K, AQ, AQ-K, AWQ, AWQ-K, AD(BH) or AD(BH)-K.

Model(s) PH, followed by -2 thru -16, followed by AB or AWB

Model(s) PHB, SZN-LHE, SAN-LHE, JC20-LHE, EH-LHE, EI-LHE, EL-LHE, S-EL-LHE, followed by 2 thru 16, followed by AWD, A, AW

Model(s) PHB, SZN-LHE, SAN-LHE, JC20-LHE, EH-LHE, EI-LHE, EL-LHE, S-EL-LHE, followed by 2 thru 16, followed by Y(T)

Model(s) PHB, XH, XHB or XHBD, followed by -2 thru -16, followed by AB or AWB.

Model(s) RAST 5-LHE TAB HEADER ASSY , TH, Vertical, Cat. Nos. 1969738-LHE,1969740-LHE, 1971845-LHE, 1971846-LHE, 1971895-LHE, 1971896-LHE, 1971946-LHE thru 1971949-LHE, 1971954-LHE thru 1971957-LHE, 2232008-LHE thru 2232011-LHE, 2232000-LHE thru 2232003-LHE, 2232016-LHE thru 2232019-LHE, 1971962-LHE thru 1971965-LHE, 2232024-LHE thru 2232027-LHE, 2232289-LHE thru 2232292-LHE, 2232043-LHE thru 2232074-LHE, 2232298-LHE thru 2232301-LHE, 2232511-LHE, 2232532-LHE, 2232557-LHE, 2232559-LHE, 2232560-LHE, 2232562-LHE, 2232563-LHE, 2232565-LHE, 2232566-LHE, 2232568-LHE, 2232569-LHE, 2232571-LHE, 2232572-LHE, 2232574-LHE, 2232575-LHE, 2232577-LHE, 2232578-LHE, 2232580-LHE, 2232581-LHE, 2232583-LHE, 2232584-LHE, 2232586-LHE, 2232587-LHE, 2232589-LHE, 2232590-LHE, 2232592-LHE, 2232593-LHE, 2232595-LHE, 2232596-LHE, 2232598-LHE, 2232599-LHE, 2232601-LHE, 2232602-LHE, 2232604-LHE, 2232605-LHE, 2232607-LHE, 2232608-LHE, 2232611-LHE thru 2232682-LHE, 2292457-LHE, 2292458-LHE, may incorporate prefix and/or suffix number.), followed by -2 thru -7, followed by Y, Y(T), AD or AWD.

Model(s) SY, followed by -2, followed by Y, Y(T), A or A(T)

Model(s) SYP, SYR, BH4.0-LHE, A10001-LHE, A7501-LHE, A8001-LHE, C2541-LHE, C2542-LHE, D250R-LHE, D280K-LHE, D300R-LHE, D350R-LHE, D400B-LHE, D430R-LHE, D470G-LHE, D480J-LHE, D480K-LHE, D480N-LHE, D480Q-LHE, D520H-LHE, D520K-LHE, D520Q-LHE, D620G-LHE, D630J-LHE, D630N-LHE, D630Q-LHE, D700G-LHE, F001-LHE, F002-LHE, HIF3-LHE, MC100-LHE, MC100-LHE, ME020-LHE, ME010-LHE, F2541-LHE, D2301-LHE, 1719057-LHE, 1719059-1-LHE, P0011-LHE, P0012-LHE, P0013-LHE, C6001-LHE, D2201-LHE, D2202-LHE or P0001-LHE, followed by -2, followed by Y, Y(T), A or A(T).

Model(s) VL-LHE , YL-LHE, SL-LHE, FL-LHE, YHD200-LHE, HA-LHE, LGC-LHE, JR-LHE, SP-LHE, 5025-LHE, followed by 2, followed by 1 thru 12, followed by A(T), Y(T), A2 or AW

Model(s) VL-LHE, YL-LHE, SL-LHE, FL-LHE, YHD200-LHE, HA-LHE, LGC-LHE, JR-LHE, SP-LHE, 5025-LHE, followed by 2 thru 12, followed by A(T), Y(T), A2 or AW

Model(s) XHD, XHE or XHQ, followed by -2 thru -15, followed by Y(T), YB(T) or YC(T), A, A-K, AW, AW-K, AD, AD-K, AWGD, AWGD-K, AQ, AQ-K, AWQ, AWQ-K, AD(BH) or AD(BH)-K.

Model(s) ZH, followed by -2 thru -16, followed by AB or AWB

Model(s) ZHR-LHE, SH-LHE, GH-LHE, NH-LHE, C1251-LHE, DF14-LHE, 5501-LHE, 75416-LHE, 543-LHE, followed by 2 thru 16, followed by AWD or A

Model(s) ZHR-LHE, SH-LHE, GH-LHE, NH-LHE, C1251-LHE, DF14-LHE, 5501-LHE, 75416-LHE, 543-LHE, followed by 2 thru 16, followed by Y(T)

Marking: Company name or trademark LHE , model designation and the Recognized Component Mark, on the device or carton.

Last Updated on 2020-02-20

并不是所有出现在本数据库中的公司名称和产品都满足了UL 跟踪检验服务的要求。只有带有 UL 标志的产品，才应该被视为经过UL认证，并满足UL 跟踪检验服务的要求。注意查看产品上的标志。

UL 允许在线认证目录中所含材料的复制遵循以下条件：1.指南信息、装配、构造、设计、系统和/或认证（文件）必须在不篡改任何数据（或图纸）的情况下完整且无误导性地呈现。2."经 UL 允许从在线认证目录转载"声明必须出现在所摘取材料的邻近位置。此外，转载材料必须包含以下格式的版权声明： "© 2020 UL LLC"

产品认证证书

证书编号：CQC17134174484

发证日期：2021 年 01 月 20 日
有效期至：2025 年 08 月 31 日

委托人名称及注册地址	浙江联和电子有限公司 浙江省乐清市乐清湾港区乐商创业园
制造商名称及注册地址	浙江联和电子有限公司 浙江省乐清市乐清湾港区乐商创业园
生产企业名称及生产地址	浙江联和电子有限公司 浙江省乐清市乐清湾港区创新路 8 号
产品名称和系列、规格、型号	连接器聚酰胺 66(PA66) 型号见附件，材料名称：聚酰胺（PA66），材料牌号：A3RV0，全色， 球压:200℃, 灼热丝可燃性指数(GWFI):960/0.3, 灼热丝起燃温度(GWIT):960/0.3, 燃烧等级:V-0@0.3mm,CTI600, 红外光谱,差示扫描量热和热重分析见报告 00601-2020134003037
产品标准和技术要求	GB/T 5169.21-2017, GB/T 5169.12-2013, GB/T 5169.13-2013, GB/T 5169.16-2017, GB/T 4207-2012, GB/T 6040-2019, GB/T 19466.1-2004, GB/T 19466.2-2004, GB/T 19466.3-2004, ISO 11358-1:2014
认证模式	产品检测+获证后监督

上述产品符合 CQC13-036047-2009 认证规则的要求，特发此证。
证书有效期内本证书的有效性依据发证机构的定期监督获得保持。

可通过扫描下方二维码或登录国家认监委网站（www.cnca.gov.cn）查验证书信息

签发：

中国质量认证中心

http://www.cqc.com.cn　　中国・北京・南四环西路188号9区　100070　　电话：+86 10 83886666

C 0453132

ZERTIFIKAT ■ CERTIFICATE ■ CERTIFICADO ■ CERTIFICAT

Verification No.: CLZJ1411264692

GTS

VERIFICATION OF LVD COMPLIANCE

Applicant: Zhejiang Lianhe Electrical Co., Ltd.
Houyu village, Shifan town, Yueqing city, Zhejiang province, China.

Manufacturer: Same as applicant

Product Description: Connector Terminal

Model No: A1001, A1002, A1003, A1251, A1252, A1253, A1254, A1255, A1256, A1257, A1501, A1502, A1503, A2001, A2002, A2003, A2004, A2005, A2006, A2007, A2501, A2502, A2503, A2504, A2505, A2505, A2506, A2507, A2541, A2542, A2543, A2544, A2545, A3961, A3962, A3963, A3564, A5081, A5082, B1501, B1502, B2001, B2002, B2501, B2502, C01581, C01582, C1251, C2001, C2002, C2501, C2502, C2505, C2506, C3001, C3002, C3003, C3004, C3005, C3006, C3501, C3502, C3701, C3702, C4001, C4002, C4141, C4142, C4201, C4202, C4203, C4204, C4601, C4602, C4501, C4502, C4503, C4504, C5001, C5002, C5031, C5032, C6201, C6202, C6351, C6352, C6701, C6702, D2801, D2802, D2803, D4801, D4802, D4803, D4804, D6301, D6302, D6303

Sufficient samples of the product have been tested and found to be in conformity with

Test Standard: EN 60320-1:2001/A1:2007
EN 60529:1991/A1:2000

As shown in the
Test Report Number(s): TLZJ1411264692

Date of issue: November 27, 2014

Conclusion

This Verification of LVD Compliance has been granted to the applicant based on the results of tests, performed by laboratory of Global Testing Services Co., Ltd on sample of the above-mentioned product in accordance with the provisions of the relevant specific standards and the Low Voltage Directive 2014/35/EU. The CE marking as shown below can be affixed, under the responsibility of the manufacturer, after completion of an EC Declaration of Conformity and compliance with all relevant EC Directives. The affixing of the CE marking presumes in addition that conditions the conditions in annexes IIIand IV of the Directive are fulfilled.

Approved by: Hermann Weiher

GLOBAL TESTING SERVICES COMMON SEAL

CE

For and on behalf of
Global Testing Services Co., Ltd

GLOBAL TESTING SERVICES CO.,LTD. GTS CERTIFICATION

Global Testing Services Co., Ltd
E-mail:info@gts-lab.com http://www.gts-lab.com
Room 1501-1502, No. 520 Yishan Rd., Xuhui District, Shanghai, 200235 China

Copyright of this certificate is owned by Global Testing Services Co., Ltd and may not be reproduced other than in full and with the prior approval of the General Manager.

PRODUCT CERTIFICATION

CERTIFICATE NO.: CQC17134174484

Valid from: Jan.20,2021
Valid until: Aug.31,2025

NAME AND REGISTERED ADDRESS OF THE APPLICANT	Zhejiang Lianhe Electronics Co., Ltd. Yueshang Pioneer Park,Yueqingwan Area, Yueqing City, Zhejiang Province
NAME AND REGISTERED ADDRESS OF THE MANUFACTURER	Zhejiang Lianhe Electronics Co., Ltd. Yueshang Pioneer Park,Yueqingwan Area, Yueqing City, Zhejiang Province
NAME AND LOCATION OF THE FACTORY	Zhejiang Lianhe Electronics Co., Ltd. No. 8, Chuangxin Road, Yueqing Bay Port District, Yueqing City, Zhejiang Province
PRODUCT NAME, MODEL AND SPECIFICATION	Connector (PA66) See Annex , Material name: PA66, material grade: A3RV0, All color, Ball pressure:200℃, Glow-Wire Flammability Index(GWFI): 960/0.3, Glow-Wire Ignition Temperature(GWIT):960/0.3, Flammability:V-0@0.3mm, CTI600 , Infrared Analysis,Differential Scanning Calorimetry(DSC), Thermogravimetry (TG) to see report Ref.No: 00601-2020134003037
THE STANDARDS AND TECHNICAL REQUIREMENTS FOR THE PRODUCTS	GB/T 5169.21-2017, GB/T 5169.12-2013, GB/T 5169.13-2013, GB/T 5169.16-2017, GB/T 4207-2012, GB/T 6040-2019, GB/T 19466.1-2004, GB/T 19466.2-2004, GB/T 19466.3-2004, ISO 11358-1:2014
TYPE OF CERTIFICATION SCHEMES	Product Testing + Follow up Factory Inspection

This is to certify that the above mentioned product(s) complies with the requirements of certification rules of CQC13-036047-2009.

The validity of the certificate is subject to positive result of the regular follow up inspection by issuing certification body until the expiry date.

The certificate information is available through the QR code below or CNCA's website: www.cnca.gov.cn

SIGNATURE:

CHINA QUALITY CERTIFICATION CENTRE

http://www.cqc.com.cn Section 9, No.188, Nansihuan Xilu, Beijing 100070 P.R.China Tel: +86 10 83886666

C 0453132

THE INTERNATIONAL CERTIFICATION NETWORK

CERTIFICATE

CQC *has issued an IQNet recognized certificate that the organization:*

ZheJiang Lianhe Electronics Co.,Ltd.

Registered Address: Yueqing Bay Port Area, Yueqing City, Wenzhou City, Zhejiang Province, P.R.China
Operation Address: No.8 Innovation Road, Yueqing Bay Port Area, Yueqing City, Wenzhou City, Zhejiang Province, P.R.China

has implemented and maintains an

Environmental Management System

for the following scope:

Design and Production of Connector and Related Management Activities

which fulfils the requirements of the following standard:

GB/T 24001-2016 / ISO 14001:2015

Issued on: February 12, 2020

Expires on: February 11, 2023

Registration Number: **CN00120E30414R0S/3302**

This attestation is directly linked to the IQNet Partner's original certificate and shall not be used as a stand-alone document

Alex Stoichitoiu
President of IQNet

Lu Mei
President of CQC

IQNet Partners*:
AENOR *Spain* AFNOR Certification *France* APCER *Portugal* CCC *Cyprus* CISQ *Italy*
CQC *China* CQM *China* CQS *Czech Republic* Cro Cert *Croatia* DQS Holding GmbH *Germany* EAGLE Certification Group *USA*
FCAV *Brazil* FONDONORMA *Venezuela* ICONTEC *Colombia* Inspecta Sertifiointi Oy *Finland* INTECO *Costa Rica*
IRAM *Argentina* JQA *Japan* KFQ *Korea* MIRTEC *Greece* MSZT *Hungary* Nemko AS *Norway* NSAI *Ireland*
NYCE-SIGE *México* PCBC *Poland* Quality Austria *Austria* RR *Russia* SII *Israel* SIQ *Slovenia*
SIRIM QAS International *Malaysia* SQS *Switzerland* SRAC *Romania* TEST St Petersburg *Russia* TSE *Turkey* YUQS *Serbia*

* The list of IQNet partners is valid at the time of issue of this certificate. Updated information is available under www.iqnet-certification.com

检测报告

编号：SHAEC23015565204　　**日期：**2023 年 09 月 28 日　　第 1 页，共 10 页

客户名称：　浙江联和电子有限公司

客户地址：　浙江省乐清市乐清湾港区乐商创业园
浙江省乐清市乐清湾港区电子信息产业园红旗路 8 号

样品名称：　PBT 连接器 白色

型号：　GH-7Y

客户参考信息：　见附件

以上样品及信息由客户提供。

SGS 工作编号：　TIC1020230922183257HWBH

样品接收时间：　2023 年 09 月 25 日

检测周期：　2023 年 09 月 25 日 ~ 2023 年 09 月 28 日

检测要求：　根据客户要求检测。

检测方法：　见后续页。

检测结果：　见后续页。

检测要求	结论
欧盟 RoHS 指令 2011/65/EU 附录 II 的修正指令(EU) 2015/863- 铅、汞、镉、六价铬、多溴联苯(PBBs)、多溴二苯醚(PBDEs)、邻苯二甲酸二丁酯 (DBP)、邻苯二甲酸丁苄酯(BBP)、邻苯二甲酸二(2-乙基已基)酯(DEHP)和邻苯二甲酸二异丁酯(DIBP)	符合

通标标准技术服务（上海）有限公司
授权签名

Carol Luo 罗萍
批准签署人

scan to see the report
688184E1

Unless otherwise agreed in writing, this document is issued by the Company subject to its General Conditions of Service printed overleaf, available on request or accessible at http://www.sgs.com/en/Terms-and-Conditions.aspx and, for electronic format documents, subject to Terms and Conditions for Electronic Documents at http://www.sgs.com/en/Terms-and-Conditions/Terms-e-Document.aspx. Attention is drawn to the limitation of liability, indemnification and jurisdiction issues defined therein. Any holder of this document is advised that information contained hereon reflects the Company's findings at the time of its intervention only and within the limits of Client's instructions, if any. The Company's sole responsibility is to its Client and this document does not exonerate parties to a transaction from exercising all their rights and obligations under the transaction documents. This document cannot be reproduced except in full, without prior written approval of the Company. Any unauthorized alteration, forgery or falsification of the content or appearance of this document is unlawful and offenders may be prosecuted to the fullest extent of the law. Unless otherwise stated the results shown in this test report refer only to the sample(s) tested.
Attention: To check the authenticity of testing /inspection report & certificate, please contact us at telephone: (86-755) 8307 1443, or email: CN.Doccheck@sgs.com
3rd Building,No.889 Yishan Road Xuhui District,Shanghai China 200233　t E&E (86-21) 61402553　f E&E (86-21)64953679　www.sgsgroup.com.cn
中国·上海·徐汇区宜山路889号3号楼　邮编: 200233　t HL (86-21) 61402594　f HL (86-21)61156899　e sgs.china@sgs.com
Member of the SGS Group (SGS SA)

SGS

检测报告

编号：SHAEC23015565204　　日期：2023 年 09 月 28 日　　第 2 页，共 10 页

检测结果：

检测部件外观描述:

样品序号	样品编号	SGS 样品 ID	样品描述
SN1	A1	SHA23-0155652-0001.C001	白色固体

备注：

(1) 1 mg/kg = 1 ppm = 0.0001%
(2) MDL= 方法检测限
(3) ND = 未检出(< MDL)
(4) "-" = 未规定

欧盟 RoHS 指令 2011/65/EU 附录 II 的修正指令(EU) 2015/863- 铅、汞、镉、六价铬、多溴联苯(PBBs)、多溴二苯醚(PBDEs)、邻苯二甲酸二丁酯 (DBP)、邻苯二甲酸丁苄酯(BBP)、邻苯二甲酸二(2-乙基已基)酯(DEHP)和邻苯二甲酸二异丁酯(DIBP)

检测方法：　参考 IEC 62321-4:2013+AMD1:2017， IEC 62321-5:2013， IEC 62321-7-2:2017， IEC 62321-6:2015 和 IEC 62321-8:2017， 采用 ICP-OES，UV-Vis 和 GC-MS 进行分析。

检测项目	限值	单位	MDL	A1
镉 (Cd)	100	mg/kg	2	ND
铅 (Pb)	1000	mg/kg	2	11
汞 (Hg)	1000	mg/kg	2	ND
六价铬(Cr(VI))	1000	mg/kg	8	ND
多溴联苯之和(PBBs)	1000	mg/kg	-	ND
一溴联苯(MonoBB)	-	mg/kg	5	ND
二溴联苯(DiBB)	-	mg/kg	5	ND
三溴联苯(TriBB)	-	mg/kg	5	ND
四溴联苯(TetraBB)	-	mg/kg	5	ND
五溴联苯(PentaBB)	-	mg/kg	5	ND
六溴联苯(HexaBB)	-	mg/kg	5	ND
七溴联苯(HeptaBB)	-	mg/kg	5	ND
八溴联苯(OctaBB)	-	mg/kg	5	ND
九溴联苯(NonaBB)	-	mg/kg	5	ND
十溴联苯(DecaBB)	-	mg/kg	5	ND
多溴二苯醚之和(PBDEs)	1000	mg/kg	-	ND
一溴二苯醚(MonoBDE)	-	mg/kg	5	ND
二溴二苯醚(DiBDE)	-	mg/kg	5	ND
三溴二苯醚(TriBDE)	-	mg/kg	5	ND
四溴二苯醚(TetraBDE)	-	mg/kg	5	ND
五溴二苯醚(PentaBDE)	-	mg/kg	5	ND
六溴二苯醚(HexaBDE)	-	mg/kg	5	ND
七溴二苯醚(HeptaBDE)	-	mg/kg	5	ND
八溴二苯醚(OctaBDE)	-	mg/kg	5	ND

Unless otherwise agreed in writing, this document is issued by the Company subject to its General Conditions of Service printed overleaf, available on request or accessible at http://www.sgs.com/en/Terms-and-Conditions.aspx and, for electronic format documents, subject to Terms and Conditions for Electronic Documents at http://www.sgs.com/en/Terms-and-Conditions/Terms-e-Document.aspx. Attention is drawn to the limitation of liability, indemnification and jurisdiction issues defined therein. Any holder of this document is advised that information contained hereon reflects the Company's findings at the time of its intervention only and within the limits of Client's instructions, if any. The Company's sole responsibility is to its Client and this document does not exonerate parties to a transaction from exercising all their rights and obligations under the transaction documents. This document cannot be reproduced except in full, without prior written approval of the Company. Any unauthorized alteration, forgery or falsification of the content or appearance of this document is unlawful and offenders may be prosecuted to the fullest extent of the law. Unless otherwise stated the results shown in this test report refer only to the sample(s) tested.
Attention: To check the authenticity of testing /inspection report & certificate, please contact us at telephone: (86-755) 8307 1443, or email: CN.Doccheck@sgs.com
3rd Building,No.889 Yishan Road Xuhui District,Shanghai China 200233 t E&E (86-21) 61402553 f E&E (86-21)64953679 www.sgsgroup.com.cn
中国·上海·徐汇区宜山路889号3号楼 邮编: 200233 t HL (86-21) 61402594 f HL (86-21)61156899 e sgs.china@sgs.com
Member of the SGS Group (SGS SA)

检测报告

编号：SHAEC23015565204　　日期：2023 年 09 月 28 日　　第 3 页，共 10 页

检测项目	限值	单位	MDL	A1
九溴二苯醚(NonaBDE)	-	mg/kg	5	ND
十溴二苯醚(DecaBDE)	-	mg/kg	5	ND
邻苯二甲酸二丁酯 (DBP)	1000	mg/kg	50	ND
邻苯二甲酸丁苄酯 (BBP)	1000	mg/kg	50	ND
邻苯二甲酸二(2-乙基己基)酯 (DEHP)	1000	mg/kg	50	ND
邻苯二甲酸二异丁酯 (DIBP)	1000	mg/kg	50	ND

备注：

(1) 最大允许极限值引用自 RoHS 指令(EU) 2015/863。

(2) IEC 62321 系列等同于 EN 62321 系列。

(3) 2021 年 7 月 22 号开始，DEHP， BBP， DBP 和 DIBP 的限制适用于医疗器械，包括体外医疗器械，监控仪表，包括工业监测和控制仪器。

除非另有说明，参照 ILAC-G8:09/2019，使用简单接受（*w*=0）的二元判定规则进行符合性判定。

除非另有说明，此报告结果仅对检测的样品负责。本报告未经本公司书面许可，不可部分复制。

检测报告仅用于客户科研、教学、内部质量控制、产品研发等目的，仅供内部参考。

Unless otherwise agreed in writing, this document is issued by the Company subject to its General Conditions of Service printed overleaf, available on request or accessible at http://www.sgs.com/en/Terms-and-Conditions.aspx and, for electronic format documents, subject to Terms and Conditions for Electronic Documents at http://www.sgs.com/en/Terms-and-Conditions/Terms-e-Document.aspx. Attention is drawn to the limitation of liability, indemnification and jurisdiction issues defined therein. Any holder of this document is advised that information contained hereon reflects the Company's findings at the time of its intervention only and within the limits of Client's instructions, if any. The Company's sole responsibility is to its Client and this document does not exonerate parties to a transaction from exercising all their rights and obligations under the transaction documents. This document cannot be reproduced except in full, without prior written approval of the Company. Any unauthorized alteration, forgery or falsification of the content or appearance of this document is unlawful and offenders may be prosecuted to the fullest extent of the law. Unless otherwise stated the results shown in this test report refer only to the sample(s) tested.
Attention: To check the authenticity of testing /inspection report & certificate, please contact us at telephone: (86-755) 8307 1443, or email: CN.Doccheck@sgs.com
3rd Building,No.889 Yishan Road Xuhui District,Shanghai China 200233 t E&E (86-21) 61402553 f E&E (86-21)64953679 www.sgsgroup.com.cn
中国·上海·徐汇区宜山路889号3号楼 邮编: 200233 t HL (86-21) 61402594 f HL (86-21)61156899 e sgs.china@sgs.com
Member of the SGS Group (SGS SA)

附件

元素检测流程图

样品按照下述流程被完全消解

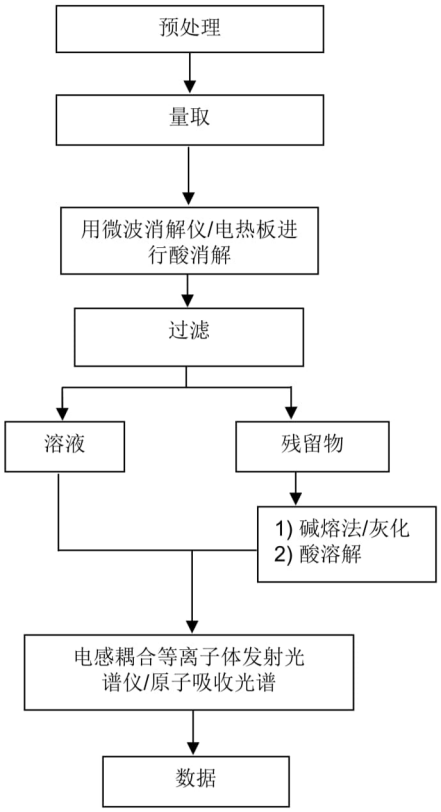

Unless otherwise agreed in writing, this document is issued by the Company subject to its General Conditions of Service printed overleaf, available on request or accessible at http://www.sgs.com/en/Terms-and-Conditions.aspx and, for electronic format documents, subject to Terms and Conditions for Electronic Documents at http://www.sgs.com/en/Terms-and-Conditions/Terms-e-Document.aspx. Attention is drawn to the limitation of liability, indemnification and jurisdiction issues defined therein. Any holder of this document is advised that information contained hereon reflects the Company's findings at the time of its intervention only and within the limits of Client's instructions, if any. The Company's sole responsibility is to its Client and this document does not exonerate parties to a transaction from exercising all their rights and obligations under the transaction documents. This document cannot be reproduced except in full, without prior written approval of the Company. Any unauthorized alteration, forgery or falsification of the content or appearance of this document is unlawful and offenders may be prosecuted to the fullest extent of the law. Unless otherwise stated the results shown in this test report refer only to the sample(s) tested.
Attention: To check the authenticity of testing /inspection report & certificate, please contact us at telephone: (86-755) 8307 1443, or email: CN.Doccheck@sgs.com
3rd Building,No.889 Yishan Road Xuhui District,Shanghai China 200233 t E&E (86-21) 61402553 f E&E (86-21)64953679 www.sgsgroup.com.cn
中国·上海·徐汇区宜山路889号3号楼 邮编: 200233 t HL (86-21) 61402594 f HL (86-21)61156899 e sgs.china@sgs.com
Member of the SGS Group (SGS SA)

检测报告 编号：SHAEC23015565204 日期：2023 年 09 月 28 日 第 5 页，共 10 页

附件

六价铬检测流程图

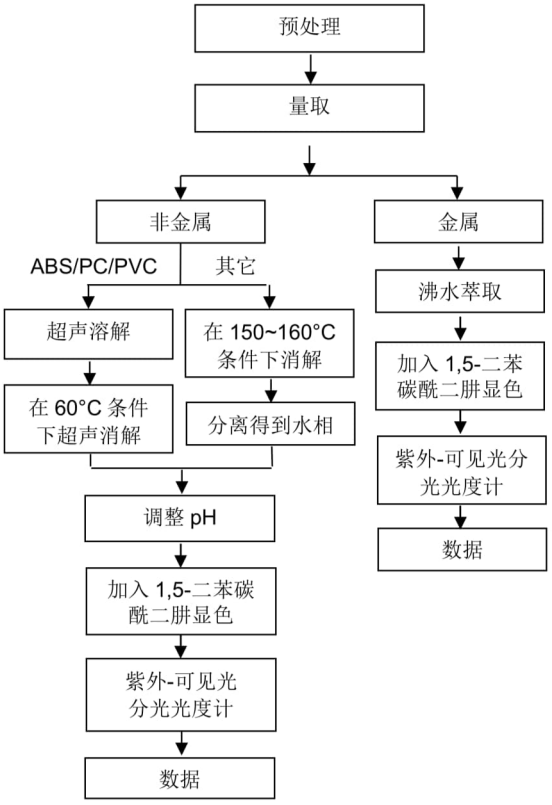

Unless otherwise agreed in writing, this document is issued by the Company subject to its General Conditions of Service printed overleaf, available on request or accessible at http://www.sgs.com/en/Terms-and-Conditions.aspx and, for electronic format documents, subject to Terms and Conditions for Electronic Documents at http://www.sgs.com/en/Terms-and-Conditions/Terms-e-Document.aspx. Attention is drawn to the limitation of liability, indemnification and jurisdiction issues defined therein. Any holder of this document is advised that information contained hereon reflects the Company's findings at the time of its intervention only and within the limits of Client's instructions, if any. The Company's sole responsibility is to its Client and this document does not exonerate parties to a transaction from exercising all their rights and obligations under the transaction documents. This document cannot be reproduced except in full, without prior written approval of the Company. Any unauthorized alteration, forgery or falsification of the content or appearance of this document is unlawful and offenders may be prosecuted to the fullest extent of the law. Unless otherwise stated the results shown in this test report refer only to the sample(s) tested.
Attention: To check the authenticity of testing /inspection report & certificate, please contact us at telephone: (86-755) 8307 1443, or email: CN.Doccheck@sgs.com
3rd Building,No.889 Yishan Road Xuhui District,Shanghai China 200233 t E&E (86-21) 61402553 f E&E (86-21)64953679 www.sgsgroup.com.cn
中国·上海·徐汇区宜山路889号3号楼 邮编: 200233 t HL (86-21) 61402594 f HL (86-21)61156899 e sgs.china@sgs.com
Member of the SGS Group (SGS SA)

附件

PBBs/PBDEs 检测流程图

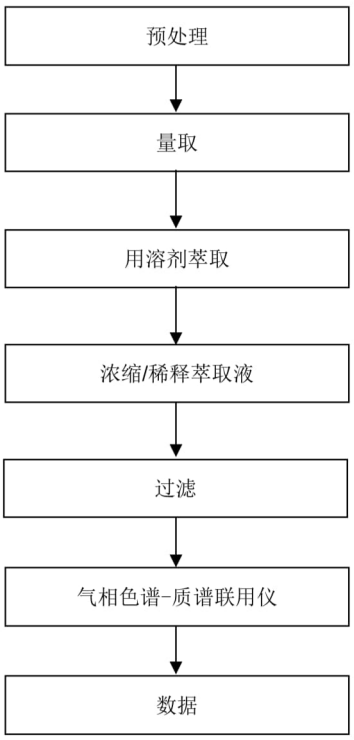

Unless otherwise agreed in writing, this document is issued by the Company subject to its General Conditions of Service printed overleaf, available on request or accessible at http://www.sgs.com/en/Terms-and-Conditions.aspx and, for electronic format documents, subject to Terms and Conditions for Electronic Documents at http://www.sgs.com/en/Terms-and-Conditions/Terms-e-Document.aspx. Attention is drawn to the limitation of liability, indemnification and jurisdiction issues defined therein. Any holder of this document is advised that information contained hereon reflects the Company's findings at the time of its intervention only and within the limits of Client's instructions, if any. The Company's sole responsibility is to its Client and this document does not exonerate parties to a transaction from exercising all their rights and obligations under the transaction documents. This document cannot be reproduced except in full, without prior written approval of the Company. Any unauthorized alteration, forgery or falsification of the content or appearance of this document is unlawful and offenders may be prosecuted to the fullest extent of the law. Unless otherwise stated the results shown in this test report refer only to the sample(s) tested.
Attention: To check the authenticity of testing /inspection report & certificate, please contact us at telephone: (86-755) 8307 1443, or email: CN.Doccheck@sgs.com
3rd Building,No.889 Yishan Road Xuhui District,Shanghai China 200233 t E&E (86-21) 61402553 f E&E (86-21)64953679 www.sgsgroup.com.cn
中国·上海·徐汇区宜山路889号3号楼 邮编: 200233 t HL (86-21) 61402594 f HL (86-21)61156899 e sgs.china@sgs.com
Member of the SGS Group (SGS SA)

附件

Phthalates 检测流程图

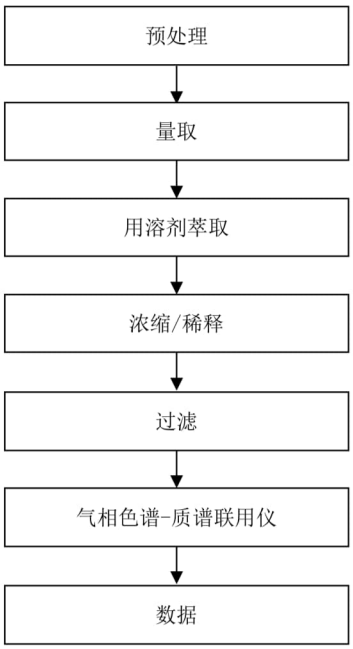

Unless otherwise agreed in writing, this document is issued by the Company subject to its General Conditions of Service printed overleaf, available on request or accessible at http://www.sgs.com/en/Terms-and-Conditions.aspx and, for electronic format documents, subject to Terms and Conditions for Electronic Documents at http://www.sgs.com/en/Terms-and-Conditions/Terms-e-Document.aspx. Attention is drawn to the limitation of liability, indemnification and jurisdiction issues defined therein. Any holder of this document is advised that information contained hereon reflects the Company's findings at the time of its intervention only and within the limits of Client's instructions, if any. The Company's sole responsibility is to its Client and this document does not exonerate parties to a transaction from exercising all their rights and obligations under the transaction documents. This document cannot be reproduced except in full, without prior written approval of the Company. Any unauthorized alteration, forgery or falsification of the content or appearance of this document is unlawful and offenders may be prosecuted to the fullest extent of the law. Unless otherwise stated the results shown in this test report refer only to the sample(s) tested.
Attention: To check the authenticity of testing /inspection report & certificate, please contact us at telephone: (86-755) 8307 1443, or email: CN.Doccheck@sgs.com
3rd Building,No.889 Yishan Road Xuhui District,Shanghai China 200233 t E&E (86-21) 61402553 f E&E (86-21)64953679 www.sgsgroup.com.cn
中国·上海·徐汇区宜山路889号3号楼 邮编: 200233 t HL (86-21) 61402594 f HL (86-21)61156899 e sgs.china@sgs.com
Member of the SGS Group (SGS SA)

附件：

1.0， SH， SHD， 1.25， 51021， DF14， DF13， GH， ZH， PH， PHB， PA， PHSD， DF11， C1251， 51047， 51146， FI-S， PHD， YHD200， PA， SMP，SMW，SMH， SMH200， SMH200-H， YH200，20039WR， 杜邦 2.0， XH/TJC3， XA， HA， XHB， XHD， XHE， EH， EI， 小四 P， 5263， 5264，5267，5268， SZN， SAN， SCN， SCND， JC15， JC20， JC25， 5102， 5240， SMH250， SMP250， SMW250， 25048HS， 25045HP， SM， TJC8, 杜邦 2.54， TJC8A，杜邦带锁， TJC8B， TJC8H， 5051，2510， 美尚美， 43640， 43645， 43020， 43025， 5500， 5600， VH， VHRR， YH396， VHR， 35156， 2139， 3.96， 90331， 5195， 5196， 39612， FL， 5557， 5559， 5566， 5569， SL，RV42， EL， YL， 小 EL， 8981， 大四 P， 5058， 5.08， L6.2， VL， VLP/VLR， TJC2， TJC2A， TJC2B， TJC4， TJC1， 1806， MX3.0， 1.58， 51005， 51006， BH3.5， BH4.0， 63080， 51004， TJC15， A4203， CL014， OTP， MKH， SMF， Cy-X201， 35108， 35150， 35151， 35224， 35180， 35965， 42021， 42022， 42002， 35955， SA， SCS， 35189， 35196， CH10， CH2.5， 543， SLP， SLR， YHL500， YWL500， FFC， FPC， 20030， 250， LGC， S11， YH025， 35155， 25415， 5197， 5198， 110， 2.8， 6.3， SCS

NH， XHQ， 42474， 42475， QH， NV， 50300， 50301， 5025， 3191， 5199， STV5， YHL500， YWL500， F001， F002， D440， D600， D620， D700， D220， D230， D250， D480， D520， D280， D630， D430， D400， D450， U-T， F1001-T， SIN-T， 774， 773， 778， 294， TU-JTK(SV)， TU(SNB)， TO-JTK(RV)， MDD， FDD， TG-JT， IDC， AUTO， CONNECTOR， DJ70， DT04， DT06， UY/K1， UY2/K2， UR/K3， UR2， UB/K4， UB2A， UG/K5， U1R/K8， U1B/K9， HJKT10， UDW2， 314， A5001， A5002， MC100， FPC2.54， SGN， PHR， ZHR， 205， 5.2， C1801， C1802， 2060， A5003， ME020， ME010， FPC/FFC， B2541， 1971845， 1971846， 2232043， 2232044， 2232511， 1971895， 1971896， JWPF， SY， Molex1.5， ME0100， RAST， A5004， DV， SJN， SDN， 35182， 35524， RCY， LC， VR， SHJ， SHL， DF19， ACH， IL-Z， SATA， XSR， SUR， SUH， ZE， ZND， ZPD， SFH， PUD， AMP2.0， 35507， DF3， PND， RE， RA， RF， SYP/SYR， HIF3， MC100/ME020/ME010， F2541， VHB， VHC， VHD

1969738, 1969740, 1971845, 1971846, 1971895, 1971896, 1971946 thru 1971949, 1971954 thru 1971957, 2232008 thru 2232011, 2232000 thru 2232003, 2232016 thru 2232019, 1971962 thru 1971965, 2232024 thru 2232027, 2232289 thru 2232292, 2232043 thru 2232074, 2232298 thru 2232301, 2232511, 2232532, 2232557, 2232559, 2232560, 2232562, 2232563, 2232565, 2232566, 2232568, 2232569, 2232571, 2232572, 2232574, 2232575, 2232577, 2232578, 2232580, 2232581, 2232583, 2232584, 2232586, 2232587, 2232589, 2232590, 2232592, 2232593, 2232595, 2232596, 2232598, 2232599, 2232601, 2232602, 2232604, 2232605, 2232607, 2232608, 2232611 thru 2232682, 2292457, 2292458, 1064,2064,3064,1080,2080,3080,1100,2100,3100,1120, 2120,3120,1150,2150,3150, 1180,2180,3180,1230,2230, 3230,1250,2250,3250,1280,2280,3280,1300,2300,3300, 1480,2480,3480, 1630,2630,3630,1780,2780,3780,1950, 2950,3950,1010,2010,3010,1013,2013,3013,1015,2015, 3015, 1016,2016,3016,1025,2025,3025,1035,2035,3035, 1045,2045,3045,1058,2058,3058,1999,2999,3999, 401,402,403,503,TPA,BX

A1001 A1002 A1003 A1004 A1005 A1006 A1007 A1008 A1009
A1251 A1252 A1253 A1254 A1255 A1256 A1257 A1258 A1259
A1501 A1502 A1503 A1504 A1505 A1506 A1507 A1508 A1509
A2001 A2002 A2003 A2004 A2005 A2006 A2007 A2008 A2009
A2010 A2011 A2012 A2013 A2014 A2015 A2016 A2017 A2018
A2501 A2502 A2503 A2504 A2505 A2506 A2507 A2508 A2509
A25010 A25011 A25012 A25013 A25014 A25015 A25016 A25017 A25018
A2541 A2542 A2543 A2544 A2545 A2546 A2547 A2548 A2549
A3001 A3002 A3003 A3004 A3005 A3006 A3007 A3008 A3009
A3301 A3302 A3303 A3304 A3305 A3306 A3307 A3308 A3309

Unless otherwise agreed in writing, this document is issued by the Company subject to its General Conditions of Service printed overleaf, available on request or accessible at http://www.sgs.com/en/Terms-and-Conditions.aspx and, for electronic format documents, subject to Terms and Conditions for Electronic Documents at http://www.sgs.com/en/Terms-and-Conditions/Terms-e-Document.aspx. Attention is drawn to the limitation of liability, indemnification and jurisdiction issues defined therein. Any holder of this document is advised that information contained hereon reflects the Company's findings at the time of its intervention only and within the limits of Client's instructions, if any. The Company's sole responsibility is to its Client and this document does not exonerate parties to a transaction from exercising all their rights and obligations under the transaction documents. This document cannot be reproduced except in full, without prior written approval of the Company. Any unauthorized alteration, forgery or falsification of the content or appearance of this document is unlawful and offenders may be prosecuted to the fullest extent of the law. Unless otherwise stated the results shown in this test report refer only to the sample(s) tested.
Attention: To check the authenticity of testing /inspection report & certificate, please contact us at telephone: (86-755) 8307 1443, or email: CN.Doccheck@sgs.com
3rd Building,No.889 Yishan Road Xuhui District,Shanghai China 200233 t E&E (86-21) 61402553 f E&E (86-21)64953679 www.sgsgroup.com.cn
中国·上海·徐汇区宜山路889号3号楼 邮编: 200233 t HL (86-21) 61402594 f HL (86-21)61156899 e sgs.china@sgs.com
Member of the SGS Group (SGS SA)

检测报告 编号：SHAEC23015565204 日期：2023 年 09 月 28 日 第 9 页，共 10 页

A3961	A3962	A3963	A3964	A3965	A3966	A3967	A3968	A3969
A4201	A4202	A4203	A4204	A4205	A4206	A4207	A4208	A4209
A5001	A5002	A5003	A5004	A5005	A5006	A5007	A5008	A5009
A5081	A5082	A5083	A5084	A5085	A5086	A5087	A5088	A5089
A6501	A6502	A6503	A6504	A6505	A6506	A6507	A6508	A6509
B1251	B1252	B1253	B1254	B1255	B1256	B1257	B1258	B1259
B1501	B1502	B1503	B1504	B1505	B1506	B1507	B1508	B1509
B2001	B2002	B2003	B2004	B2005	B2006	B2007	B2008	B2009
B2501	B2502	B2503	B2504	B2505	B2506	B2507	B2508	B2509
B2541	B2542	B2543	B2544	B2545	B2546	B2547	B2548	B2549
B76201	B76202	B76203	B76204	B76205	B76206	B76207	B76208	B76209
B13001	B13002	B13003	B13004	B13005	B13006	B13007	B13008	B13009
C01581	C01582	C01583	C01584	C01585	C01586	C01587	C01588	C01589
C1251	C1252	C1253	C1254	C1255	C1256	C1257	C1258	C1259
C1501	C1502	C1503	C1504	C1505	C1506	C1507	C1508	C1509
C2001	C2002	C2003	C2004	C2005	C2006	C2007	C2008	C2009
C2501	C2502	C2503	C2504	C2505	C2506	C2507	C2508	C2509
C25010	C25011	C25012	C25013	C25014	C25015	C25016	C25017	C25018
C2541	C2542	C2543	C2544	C2545	C2546	C2547	C2548	C2549
C3001	C3002	C3003	C3004	C3005	C3006	C3007	C3008	C3009
C3501	C3502	C3503	C3504	C3505	C3506	C3507	C3508	C3509
C3681	C3682	C3683	C3684	C3685	C3686	C3687	C3688	C3689
C3961	C3962	C3963	C3964	C3965	C3966	C3967	C3968	C3969
C4001	C4002	C4003	C4004	C4005	C4006	C4007	C4008	C4009
C4141	C4142	C4143	C4144	C4145	C4146	C4147	C4148	C4149
C4201	C4202	C4203	C4204	C4205	C4206	C4207	C4208	C4209
C4501	C4502	C4503	C4504	C4505	C4506	C4507	C4508	C4509
C5001	C5002	C5003	C5004	C5005	C5006	C5007	C5008	C5009
C6201	C6202	C6203	C6204	C6205	C6206	C6207	C6208	C6209
C6351	C6352	C6353	C6354	C6355	C6356	C6357	C6358	C6359
D2801	D2802	D2803	D2804	D2805	D2806	D2807	D2808	D2809
D4801	D4802	D4803	D4804	D4805	D4806	D4807	D4808	D4809
D5201	D5202	D5203	D5204	D5205	D5206	D5207	D5208	D5209
D6301	D6302	D6303	D6304	D6305	D6306	D6307	D6308	D6309
D6201	D6202	D6203	D6204	D6205	D6206	D6207	D6208	D6209
D7001	D7002	D7003	D7004	D7005	D7006	D7007	D7008	D7009
F0501	F0502	F0503	F0504	F0505	F0506	F0507	F0508	F0509
F05010	F05011	F05012	F05013	F05014	F05015	F05016	F05017	F05018
F1001	F1002	F1003	F1004	F1005	F1006	F1007	F1008	F1009
F10010	F10011	F10012	F10013	F10014	F10015	F10016	F10017	F10018
F2541	F2542	F2543	F2544	F2545	F2546	F2547	F2548	F2549
P0001	P0002	P0003	P0004	P0005	P0006	P0007	P0008	P0009
P0010	P0011	P0012	P0013	P0014	P0015	P0016	P0017	P0018
P0019	P0020	P0021	P0022	P0023	P0024	P0025	P0026	P0027
D2301	D2302	D2303	D2304	D2305	D2306	D2307	D2308	D2309
D6001	D6002	D6003	D6004	D6005	D6006	D6007	D6008	D6009
D2201	D2202	D2203	D2204	D2205	D2206	D2207	D2208	D2209

Unless otherwise agreed in writing, this document is issued by the Company subject to its General Conditions of Service printed overleaf, available on request or accessible at http://www.sgs.com/en/Terms-and-Conditions.aspx and, for electronic format documents, subject to Terms and Conditions for Electronic Documents at http://www.sgs.com/en/Terms-and-Conditions/Terms-e-Document.aspx. Attention is drawn to the limitation of liability, indemnification and jurisdiction issues defined therein. Any holder of this document is advised that information contained hereon reflects the Company's findings at the time of its intervention only and within the limits of Client's instructions, if any. The Company's sole responsibility is to its Client and this document does not exonerate parties to a transaction from exercising all their rights and obligations under the transaction documents. This document cannot be reproduced except in full, without prior written approval of the Company. Any unauthorized alteration, forgery or falsification of the content or appearance of this document is unlawful and offenders may be prosecuted to the fullest extent of the law. Unless otherwise stated the results shown in this test report refer only to the sample(s) tested.
Attention: To check the authenticity of testing /inspection report & certificate, please contact us at telephone: (86-755) 8307 1443, or email: CN.Doccheck@sgs.com
3rd Building,No.889 Yishan Road Xuhui District,Shanghai China 200233 t E&E (86-21) 61402553 f E&E (86-21)64953679 www.sgsgroup.com.cn
中国·上海·徐汇区宜山路889号3号楼 邮编: 200233 t HL (86-21) 61402594 f HL (86-21)61156899 e sgs.china@sgs.com
Member of the SGS Group (SGS SA)

检测报告 编号：SHAEC23015565204 日期：2023 年 09 月 28 日 第 10 页，共 10 页

样品照片：

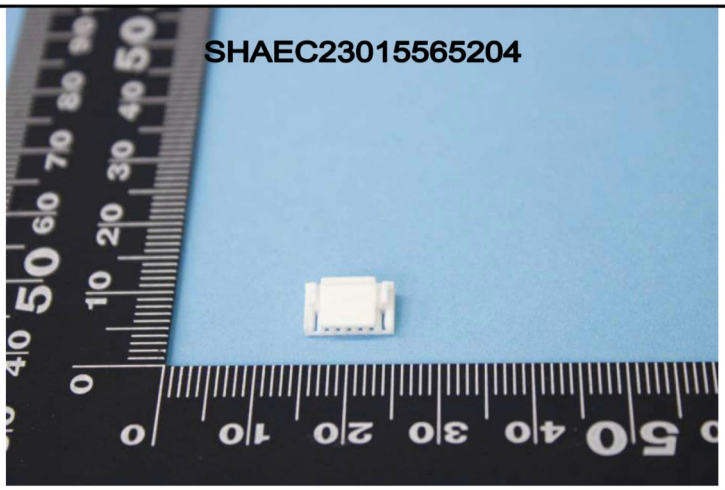

SHA23-0155652-0001.C001

此照片仅限于随 SGS 正本报告使用

报告结束

Unless otherwise agreed in writing, this document is issued by the Company subject to its General Conditions of Service printed overleaf, available on request or accessible at http://www.sgs.com/en/Terms-and-Conditions.aspx and, for electronic format documents, subject to Terms and Conditions for Electronic Documents at http://www.sgs.com/en/Terms-and-Conditions/Terms-e-Document.aspx. Attention is drawn to the limitation of liability, indemnification and jurisdiction issues defined therein. Any holder of this document is advised that information contained hereon reflects the Company's findings at the time of its intervention only and within the limits of Client's instructions, if any. The Company's sole responsibility is to its Client and this document does not exonerate parties to a transaction from exercising all their rights and obligations under the transaction documents. This document cannot be reproduced except in full, without prior written approval of the Company. Any unauthorized alteration, forgery or falsification of the content or appearance of this document is unlawful and offenders may be prosecuted to the fullest extent of the law. Unless otherwise stated the results shown in this test report refer only to the sample(s) tested.
Attention: To check the authenticity of testing /inspection report & certificate, please contact us at telephone: (86-755) 8307 1443, or email: CN.Doccheck@sgs.com
3rd Building,No.889 Yishan Road Xuhui District,Shanghai China 200233 t E&E (86-21) 61402553 f E&E (86-21)64953679 www.sgsgroup.com.cn
中国·上海·徐汇区宜山路889号3号楼 邮编: 200233 t HL (86-21) 61402594 f HL (86-21)61156899 e sgs.china@sgs.com
Member of the SGS Group (SGS SA)

230920340938

中国认可
国际互认
检测
TESTING
CNAS L0599

检测报告

编号：SHAEC24008425816　　日期：2024 年 05 月 07 日　　第 1 页，共 8 页

客户名称：　浙江联和电子有限公司

客户地址：　浙江省乐清市乐清湾港区乐商创业园
浙江省乐清市乐清湾港区电子信息产业园红旗路 8 号

样品名称：　端子 针

客户参考信息：　见附件

以上样品及信息由客户提供。

SGS 工作编号：　TIC1020240424174615KLN9

样品接收时间：　2024 年 04 月 26 日

检测周期：　2024 年 04 月 26 日 ~ 2024 年 05 月 07 日

检测要求：　根据客户要求检测。

检测方法：　见后续页。

检测结果：　见后续页。

检测要求	结论
欧盟 RoHS 指令 2011/65/EU 附录 II 的修正指令(EU) 2015/863-铅、汞、镉和六价铬	符合

通标标准技术服务（上海）有限公司
授权签名

胡敏

Dora Hu 胡敏
批准签署人

scan to see the report
F5FAA78D

Unless otherwise agreed in writing, this document is issued by the Company subject to its General Conditions of Service printed overleaf, available on request or accessible at http://www.sgs.com/en/Terms-and-Conditions.aspx and, for electronic format documents, subject to Terms and Conditions for Electronic Documents at http://www.sgs.com/en/Terms-and-Conditions/Terms-e-Document.aspx. Attention is drawn to the limitation of liability, indemnification and jurisdiction issues defined therein. Any holder of this document is advised that information contained hereon reflects the Company's findings at the time of its intervention only and within the limits of Client's instructions, if any. The Company's sole responsibility is to its Client and this document does not exonerate parties to a transaction from exercising all their rights and obligations under the transaction documents. This document cannot be reproduced except in full, without prior written approval of the Company. Any unauthorized alteration, forgery or falsification of the content or appearance of this document is unlawful and offenders may be prosecuted to the fullest extent of the law. Unless otherwise stated the results shown in this test report refer only to the sample(s) tested.
Attention: To check the authenticity of testing /inspection report & certificate, please contact us at telephone: (86-755) 8307 1443, or email: CN.Doccheck@sgs.com
3rd Building,No.889 Yishan Road Xuhui District,Shanghai China 200233　t E&E (86-21) 61402553　f E&E (86-21)64953679　www.sgsgroup.com.cn
中国 · 上海 · 徐汇区宜山路889号3号楼　邮编: 200233　t HL (86-21) 61402594　f HL (86-21)61156899　e sgs.china@sgs.com
Member of the SGS Group (SGS SA)

SGS

检测报告 编号：SHAEC24008425816 日期：2024 年 05 月 07 日 第 2 页，共 8 页

检测结果：

检测部件外观描述:

样品序号	样品编号	SGS 样品 ID	样品描述
SN1	A3	SHA24-0084258-0001.C003	银色金属

备注：
(1) 1 mg/kg = 1 ppm = 0.0001%
(2) MDL= 方法检测限
(3) ND = 未检出(< MDL)
(4) "-" = 未规定

欧盟 RoHS 指令 2011/65/EU 附录 II 的修正指令(EU) 2015/863-铅、汞、镉和六价铬

检测方法： 参考 IEC 62321-4:2013+AMD1:2017，IEC 62321-5:2013 和 IEC 62321-7-1:2015，采用 ICP-OES/AAS 和 UV-Vis 进行分析。

检测项目	限值	单位	MDL	A3
铅 (Pb)	1000	mg/kg	2	37
汞 (Hg)	1000	mg/kg	2	ND
镉 (Cd)	100	mg/kg	2	ND
六价铬 (Cr(VI))▼	-	μg/cm²	0.10	ND

备注：
(1) 最大允许极限值引用自RoHS指令(EU) 2015/863。
(2) IEC 62321系列等同于 EN 62321系列。
(3) ▼ = a. 当六价铬的浓度高于0.13 μg/cm²时，样品为阳性，即含有六价铬；
b. 当六价铬的浓度为ND (低于0.10 μg/cm²) 时，样品为阴性，即未检测到六价铬；
c. 当六价铬的浓度介于0.10 μg/cm²与0.13 μg/cm²之间时，无法直接判定是否检测到六价铬，因不同个体的样品表面差异可能会影响测定结果。

由于未获知样品的存储条件和生产日期，样品的六价铬检测结果仅能代表检测时样品含六价铬的状态。

除非另有说明，参照 ILAC-G8:09/2019，使用简单接受（*w*=0）的二元判定规则进行符合性判定。
除非另有说明，此报告结果仅对检测的样品负责。本报告未经本公司书面许可，不可部分复制。

Unless otherwise agreed in writing, this document is issued by the Company subject to its General Conditions of Service printed overleaf, available on request or accessible at http://www.sgs.com/en/Terms-and-Conditions.aspx and, for electronic format documents, subject to Terms and Conditions for Electronic Documents at http://www.sgs.com/en/Terms-and-Conditions/Terms-e-Document.aspx. Attention is drawn to the limitation of liability, indemnification and jurisdiction issues defined therein. Any holder of this document is advised that information contained hereon reflects the Company's findings at the time of its intervention only and within the limits of Client's instructions, if any. The Company's sole responsibility is to its Client and this document does not exonerate parties to a transaction from exercising all their rights and obligations under the transaction documents. This document cannot be reproduced except in full, without prior written approval of the Company. Any unauthorized alteration, forgery or falsification of the content or appearance of this document is unlawful and offenders may be prosecuted to the fullest extent of the law. Unless otherwise stated the results shown in this test report refer only to the sample(s) tested.
Attention: To check the authenticity of testing /inspection report & certificate, please contact us at telephone: (86-755) 8307 1443, or email: CN.Doccheck@sgs.com
3rd Building,No.889 Yishan Road Xuhui District,Shanghai China 200233 t E&E (86-21) 61402553 f E&E (86-21)64953679 www.sgsgroup.com.cn
中国·上海·徐汇区宜山路889号3号楼 邮编: 200233 t HL (86-21) 61402594 f HL (86-21)61156899 e sgs.china@sgs.com
Member of the SGS Group (SGS SA)

检测报告 编号：SHAEC24008425816 日期：2024 年 05 月 07 日 第 3 页，共 8 页

附件

元素检测流程图

样品按照下述流程被完全消解

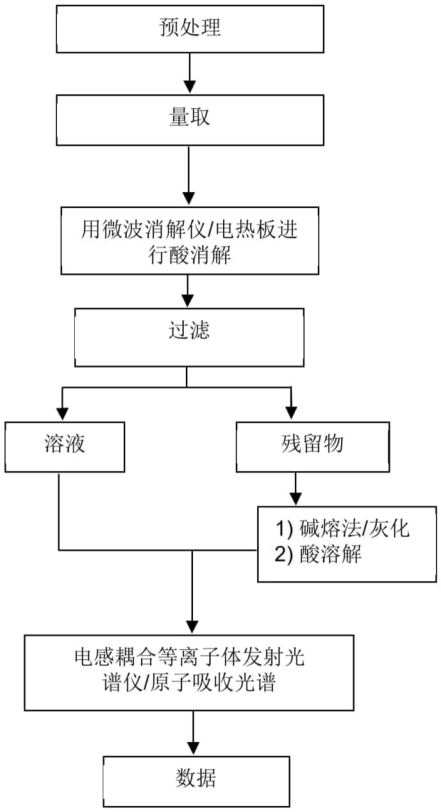

Unless otherwise agreed in writing, this document is issued by the Company subject to its General Conditions of Service printed overleaf, available on request or accessible at http://www.sgs.com/en/Terms-and-Conditions.aspx and, for electronic format documents, subject to Terms and Conditions for Electronic Documents at http://www.sgs.com/en/Terms-and-Conditions/Terms-e-Document.aspx. Attention is drawn to the limitation of liability, indemnification and jurisdiction issues defined therein. Any holder of this document is advised that information contained hereon reflects the Company's findings at the time of its intervention only and within the limits of Client's instructions, if any. The Company's sole responsibility is to its Client and this document does not exonerate parties to a transaction from exercising all their rights and obligations under the transaction documents. This document cannot be reproduced except in full, without prior written approval of the Company. Any unauthorized alteration, forgery or falsification of the content or appearance of this document is unlawful and offenders may be prosecuted to the fullest extent of the law. Unless otherwise stated the results shown in this test report refer only to the sample(s) tested.
Attention: To check the authenticity of testing /inspection report & certificate, please contact us at telephone: (86-755) 8307 1443, or email: CN.Doccheck@sgs.com
3rd Building,No.889 Yishan Road Xuhui District,Shanghai China 200233 t E&E (86-21) 61402553 f E&E (86-21)64953679 www.sgsgroup.com.cn
中国·上海·徐汇区宜山路889号3号楼 邮编: 200233 t HL (86-21) 61402594 f HL (86-21)61156899 e sgs.china@sgs.com
Member of the SGS Group (SGS SA)

检测报告 编号：SHAEC24008425816 日期：2024 年 05 月 07 日 第 4 页，共 8 页

附件

六价铬检测流程图

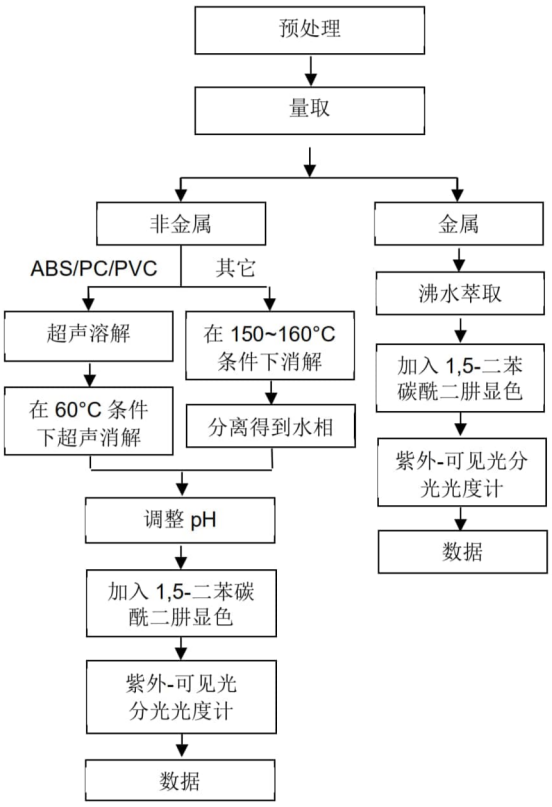

Unless otherwise agreed in writing, this document is issued by the Company subject to its General Conditions of Service printed overleaf, available on request or accessible at http://www.sgs.com/en/Terms-and-Conditions.aspx and, for electronic format documents, subject to Terms and Conditions for Electronic Documents at http://www.sgs.com/en/Terms-and-Conditions/Terms-e-Document.aspx. Attention is drawn to the limitation of liability, indemnification and jurisdiction issues defined therein. Any holder of this document is advised that information contained hereon reflects the Company's findings at the time of its intervention only and within the limits of Client's instructions, if any. The Company's sole responsibility is to its Client and this document does not exonerate parties to a transaction from exercising all their rights and obligations under the transaction documents. This document cannot be reproduced except in full, without prior written approval of the Company. Any unauthorized alteration, forgery or falsification of the content or appearance of this document is unlawful and offenders may be prosecuted to the fullest extent of the law. Unless otherwise stated the results shown in this test report refer only to the sample(s) tested.
Attention: To check the authenticity of testing /inspection report & certificate, please contact us at telephone: (86-755) 8307 1443, or email: CN.Doccheck@sgs.com
3rd Building,No.889 Yishan Road Xuhui District,Shanghai China 200233 t E&E (86-21) 61402553 f E&E (86-21)64953679 www.sgsgroup.com.cn
中国·上海·徐汇区宜山路889号3号楼 邮编: 200233 t HL (86-21) 61402594 f HL (86-21)61156899 e sgs.china@sgs.com
Member of the SGS Group (SGS SA)

附件：
1.0，SH，SHD，1.25，51021，DF14，DF13，GH，ZH，PH，PHB，PA，PHSD，DF11，C1251，51047，51146，FI-S，PHD，YHD200，PA，SMP，SMW，SMH，SMH200，SMH200-H，YH200，20039WR，杜邦 2.0，XH/TJC3，XA，HA，XHB，XHD，XHE，EH，EI，小四 P，5263，5264，5267，5268，SZN，SAN，SCN，SCND，JC15，JC20，JC25，5102，5240，SMH250，SMP250，SMW250，25048HS，25045HP，SM，TJC8, 杜邦 2.54，TJC8A，杜邦带锁，TJC8B，TJC8H，5051，2510，美尚美，43640，43645，43020，43025，5500，5600，VH，VHRR，YH396，VHR，35156，2139，3.96，90331，5195，5196，39612，FL，5557，5559，5566，5569，SL，RV42，EL，YL，小 EL，8981，大四 P，5058，5.08，L6.2，VL，VLP/VLR，TJC2，TJC2A，TJC2B，TJC4，TJC1，1806，MX3.0，1.58，51005，51006，BH3.5，BH4.0，63080，51004，TJC15，A4203，CL014，OTP，MKH，SMF，Cy-X201，35108，35150，35151，35224，35180，35965，42021，42022，42002，35955，SA，SCS，35189，35196，CH10，CH2.5，543，SLP，SLR，YHL500，YWL500，FFC，FPC，20030，250，LGC，S11，YH025，35155，25415，5197，5198，110，2.8，6.3，SCS
NH，XHQ，42474，42475，QH，NV，50300，50301，5025，3191，5199，STV5，YHL500，YWL500，F001，F002，D440，D600，D620，D700，D220，D230，D250，D480，D520，D280，D630，D430，D400，D450，U-T，F1001-T，SIN-T，774，773，778，294，TU-JTK(SV)，TU(SNB)，TO-JTK(RV)，MDD，FDD，TG-JT，IDC，AUTO，CONNECTOR，DJ70，DT04，DT06，UY/K1，UY2/K2，UR/K3，UR2，UB/K4，UB2A，UG/K5，U1R/K8，U1B/K9，HJKT10，UDW2，314，A5001，A5002，MC100，FPC2.54，SGN，PHR，ZHR，205，5.2，C1801，C1802，2060，A5003，ME020，ME010，FPC/FFC，B2541，1971845，1971846，2232043，2232044，2232511，1971895，1971896，JWPF，SY，Molex1.5，ME0100，RAST，A5004，DV，SJN，SDN，35182，35524，RCY，LC，VR，SHJ，SHL，DF19，ACH，IL-Z，SATA，XSR，SUR，SUH，ZE，ZND，ZPD，SFH，PUD，AMP2.0，35507，DF3，PND，RE，RA，RF，SYP/SYR，HIF3，MC100/ME020/ME010，F2541，VHB，VHC，VHD
SHB1.0, NHB1.0, FIS, VHE, 35313, 30PIN, PR9-409, PR5-70-1, PR5-24, 5240B, 5500B, 5600B,13006,13007, 3DLG06FW, 1719057, 1719058, 1719059, CS28H, 9102501, 9103101, 9111001, PP0311401, 33EMMT26FBK, 3CN2BH02, 3FW06FBM, PP0426613, PP0426202, GIC3.3, 1376421-1, XADR, XADRR, 179846, 179849, XHR, 50235, PAD, PNI, SDL2.5, PS-250-2A-15, 4.8, 62306, H9002, DC4235, 62308, 62420-1, B35E0, 63658-1, 1060-16-0122, RH0409000142, RH011810030061, RH040499000142, RH011810030090, 299900421692, 33146412, 1.25 插板, SPS-01T-110, 282104-1, 282105-1, 282110-1, 282109-1, 21T1000501, 20T1001001, PP043531T, XNIRP, XL, 1123343-1, DF16, 1473413-1, 12147302, MG641234-5, PHBS,0.8, Molex1.2, 35746, 35748, APM2.54

1969738, 1969740, 1971845, 1971846, 1971895, 1971896, 1971946 thru 1971949, 1971954 thru 1971957, 2232008 thru 2232011, 2232000 thru 2232003, 2232016 thru 2232019, 1971962 thru 1971965, 2232024 thru 2232027, 2232289 thru 2232292, 2232043 thru 2232074, 2232298 thru 2232301, 2232511, 2232532, 2232557, 2232559, 2232560, 2232562, 2232563, 2232565, 2232566, 2232568, 2232569, 2232571, 2232572, 2232574, 2232575, 2232577, 2232578, 2232580, 2232581, 2232583, 2232584, 2232586, 2232587, 2232589, 2232590, 2232592, 2232593, 2232595, 2232596, 2232598, 2232599, 2232601, 2232602, 2232604, 2232605, 2232607, 2232608, 2232611 thru 2232682, 2292457, 2292458, 1064,2064,3064,1080,2080,3080,1100,2100,3100,1120, 2120,3120,1150,2150,3150, 1180,2180,3180,1230,2230, 3230,1250,2250,3250,1280,2280,3280,1300,2300,3300, 1480,2480,3480, 1630,2630,3630,1780,2780,3780,1950, 2950,3950,1010,2010,3010,1013,2013,3013,1015,2015, 3015, 1016,2016,3016,1025,2025,3025,1035,2035,3035, 1045,2045,3045,1058,2058,3058,1999,2999,3999, 401,402,403,503,TPA,BX,CPA, 404, 501, 502
A1001 A1002 A1003 A1004 A1005 A1006 A1007 A1008 A1009
A1251 A1252 A1253 A1254 A1255 A1256 A1257 A1258 A1259
A1501 A1502 A1503 A1504 A1505 A1506 A1507 A1508 A1509
A2001 A2002 A2003 A2004 A2005 A2006 A2007 A2008 A2009

Unless otherwise agreed in writing, this document is issued by the Company subject to its General Conditions of Service printed overleaf, available on request or accessible at http://www.sgs.com/en/Terms-and-Conditions.aspx and, for electronic format documents, subject to Terms and Conditions for Electronic Documents at http://www.sgs.com/en/Terms-and-Conditions/Terms-e-Document.aspx. Attention is drawn to the limitation of liability, indemnification and jurisdiction issues defined therein. Any holder of this document is advised that information contained hereon reflects the Company's findings at the time of its intervention only and within the limits of Client's instructions, if any. The Company's sole responsibility is to its Client and this document does not exonerate parties to a transaction from exercising all their rights and obligations under the transaction documents. This document cannot be reproduced except in full, without prior written approval of the Company. Any unauthorized alteration, forgery or falsification of the content or appearance of this document is unlawful and offenders may be prosecuted to the fullest extent of the law. Unless otherwise stated the results shown in this test report refer only to the sample(s) tested.
Attention: To check the authenticity of testing /inspection report & certificate, please contact us at telephone: (86-755) 8307 1443, or email: CN.Doccheck@sgs.com
3rd Building,No.889 Yishan Road Xuhui District,Shanghai China 200233 t E&E (86-21) 61402553 f E&E (86-21)64953679 www.sgsgroup.com.cn
中国·上海·徐汇区宜山路889号3号楼 邮编: 200233 t HL (86-21) 61402594 f HL (86-21)61156899 e sgs.china@sgs.com
Member of the SGS Group (SGS SA)

SGS

检测报告 编号：SHAEC24008425816 日期：2024 年 05 月 07 日 第 6 页，共 8 页

A2010	A2011	A2012	A2013	A2014	A2015	A2016	A2017	A2018
A2501	A2502	A2503	A2504	A2505	A2506	A2507	A2508	A2509
A25010	A25011	A25012	A25013	A25014	A25015	A25016	A25017	A25018
A2541	A2542	A2543	A2544	A2545	A2546	A2547	A2548	A2549
A3001	A3002	A3003	A3004	A3005	A3006	A3007	A3008	A3009
A3301	A3302	A3303	A3304	A3305	A3306	A3307	A3308	A3309
A3961	A3962	A3963	A3964	A3965	A3966	A3967	A3968	A3969
A4201	A4202	A4203	A4204	A4205	A4206	A4207	A4208	A4209
A5001	A5002	A5003	A5004	A5005	A5006	A5007	A5008	A5009
A5081	A5082	A5083	A5084	A5085	A5086	A5087	A5088	A5089
A6501	A6502	A6503	A6504	A6505	A6506	A6507	A6508	A6509
B1251	B1252	B1253	B1254	B1255	B1256	B1257	B1258	B1259
B1501	B1502	B1503	B1504	B1505	B1506	B1507	B1508	B1509
B2001	B2002	B2003	B2004	B2005	B2006	B2007	B2008	B2009
B2501	B2502	B2503	B2504	B2505	B2506	B2507	B2508	B2509
B2541	B2542	B2543	B2544	B2545	B2546	B2547	B2548	B2549
B76201	B76202	B76203	B76204	B76205	B76206	B76207	B76208	B76209
B13001	B13002	B13003	B13004	B13005	B13006	B13007	B13008	B13009
C01581	C01582	C01583	C01584	C01585	C01586	C01587	C01588	C01589
C1251	C1252	C1253	C1254	C1255	C1256	C1257	C1258	C1259
C1501	C1502	C1503	C1504	C1505	C1506	C1507	C1508	C1509
C2001	C2002	C2003	C2004	C2005	C2006	C2007	C2008	C2009
C2501	C2502	C2503	C2504	C2505	C2506	C2507	C2508	C2509
C25010	C25011	C25012	C25013	C25014	C25015	C25016	C25017	C25018
C2541	C2542	C2543	C2544	C2545	C2546	C2547	C2548	C2549
C3001	C3002	C3003	C3004	C3005	C3006	C3007	C3008	C3009
C3501	C3502	C3503	C3504	C3505	C3506	C3507	C3508	C3509
C3681	C3682	C3683	C3684	C3685	C3686	C3687	C3688	C3689
C3961	C3962	C3963	C3964	C3965	C3966	C3967	C3968	C3969
C4001	C4002	C4003	C4004	C4005	C4006	C4007	C4008	C4009
C4141	C4142	C4143	C4144	C4145	C4146	C4147	C4148	C4149
C4201	C4202	C4203	C4204	C4205	C4206	C4207	C4208	C4209
C4501	C4502	C4503	C4504	C4505	C4506	C4507	C4508	C4509
C5001	C5002	C5003	C5004	C5005	C5006	C5007	C5008	C5009
C6201	C6202	C6203	C6204	C6205	C6206	C6207	C6208	C6209
C6351	C6352	C6353	C6354	C6355	C6356	C6357	C6358	C6359
D2801	D2802	D2803	D2804	D2805	D2806	D2807	D2808	D2809
D4801	D4802	D4803	D4804	D4805	D4806	D4807	D4808	D4809
D5201	D5202	D5203	D5204	D5205	D5206	D5207	D5208	D5209
D6301	D6302	D6303	D6304	D6305	D6306	D6307	D6308	D6309
D6201	D6202	D6203	D6204	D6205	D6206	D6207	D6208	D6209
D7001	D7002	D7003	D7004	D7005	D7006	D7007	D7008	D7009
F0501	F0502	F0503	F0504	F0505	F0506	F0507	F0508	F0509
F05010	F05011	F05012	F05013	F05014	F05015	F05016	F05017	F05018
F1001	F1002	F1003	F1004	F1005	F1006	F1007	F1008	F1009
F10010	F10011	F10012	F10013	F10014	F10015	F10016	F10017	F10018
F2541	F2542	F2543	F2544	F2545	F2546	F2547	F2548	F2549
P0001	P0002	P0003	P0004	P0005	P0006	P0007	P0008	P0009
P0010	P0011	P0012	P0013	P0014	P0015	P0016	P0017	P0018
P0019	P0020	P0021	P0022	P0023	P0024	P0025	P0026	P0027

Unless otherwise agreed in writing, this document is issued by the Company subject to its General Conditions of Service printed overleaf, available on request or accessible at http://www.sgs.com/en/Terms-and-Conditions.aspx and, for electronic format documents, subject to Terms and Conditions for Electronic Documents at http://www.sgs.com/en/Terms-and-Conditions/Terms-e-Document.aspx. Attention is drawn to the limitation of liability, indemnification and jurisdiction issues defined therein. Any holder of this document is advised that information contained hereon reflects the Company's findings at the time of its intervention only and within the limits of Client's instructions, if any. The Company's sole responsibility is to its Client and this document does not exonerate parties to a transaction from exercising all their rights and obligations under the transaction documents. This document cannot be reproduced except in full, without prior written approval of the Company. Any unauthorized alteration, forgery or falsification of the content or appearance of this document is unlawful and offenders may be prosecuted to the fullest extent of the law. Unless otherwise stated the results shown in this test report refer only to the sample(s) tested.
Attention: To check the authenticity of testing /inspection report & certificate, please contact us at telephone: (86-755) 8307 1443, or email: CN.Doccheck@sgs.com

3rd Building,No.889 Yishan Road Xuhui District,Shanghai China 200233 t E&E (86-21) 61402553 f E&E (86-21)64953679 www.sgsgroup.com.cn
中国·上海·徐汇区宜山路889号3号楼 邮编: 200233 t HL (86-21) 61402594 f HL (86-21)61156899 e sgs.china@sgs.com

Member of the SGS Group (SGS SA)

SGS

检测报告 编号：SHAEC24008425816 日期：2024 年 05 月 07 日 第 7 页，共 8 页

D2301 D2302 D2303 D2304 D2305 D2306 D2307 D2308 D2309
D6001 D6002 D6003 D6004 D6005 D6006 D6007 D6008 D6009
D2201 D2202 D2203 D2204 D2205 D2206 D2207 D2208 D2209
B10901 B13601 C6001 C6002 C6003 C6004 A20010 A20011 P0028
P0029 P0030 P0031 B11001 C2201 C2202 C4101 C6701 C6702
D630J D700G A20012 P0032 B4001 A0801 A1271 A1803
A10001 A4141 A7501 A7502 A3501 A1201 A4001 A6351 B14501
A20013 A1202 D2501 A1801 A1802

Unless otherwise agreed in writing, this document is issued by the Company subject to its General Conditions of Service printed overleaf, available on request or accessible at http://www.sgs.com/en/Terms-and-Conditions.aspx and, for electronic format documents, subject to Terms and Conditions for Electronic Documents at http://www.sgs.com/en/Terms-and-Conditions/Terms-e-Document.aspx. Attention is drawn to the limitation of liability, indemnification and jurisdiction issues defined therein. Any holder of this document is advised that information contained hereon reflects the Company's findings at the time of its intervention only and within the limits of Client's instructions, if any. The Company's sole responsibility is to its Client and this document does not exonerate parties to a transaction from exercising all their rights and obligations under the transaction documents. This document cannot be reproduced except in full, without prior written approval of the Company. Any unauthorized alteration, forgery or falsification of the content or appearance of this document is unlawful and offenders may be prosecuted to the fullest extent of the law. Unless otherwise stated the results shown in this test report refer only to the sample(s) tested.
Attention: To check the authenticity of testing /inspection report & certificate, please contact us at telephone: (86-755) 8307 1443, or email: CN.Doccheck@sgs.com

3rd Building,No.889 Yishan Road Xuhui District,Shanghai China 200233 t E&E (86-21) 61402553 f E&E (86-21)64953679 www.sgsgroup.com.cn
中国·上海·徐汇区宜山路889号3号楼 邮编: 200233 t HL (86-21) 61402594 f HL (86-21)61156899 e sgs.china@sgs.com

Member of the SGS Group (SGS SA)

检测报告 编号：SHAEC24008425816 日期：2024 年 05 月 07 日 第 8 页，共 8 页

样品照片：

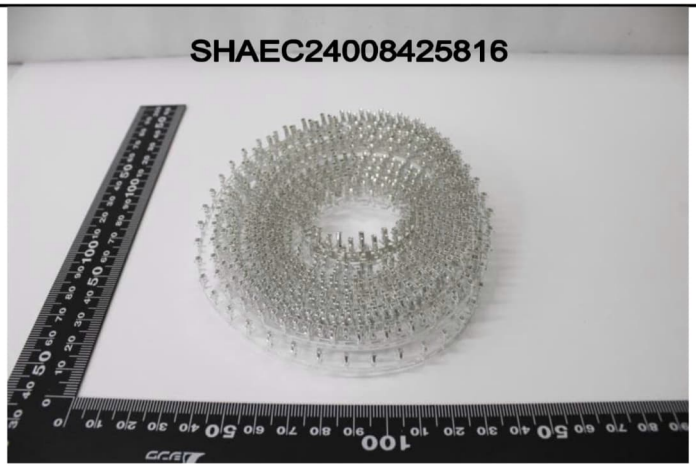

SHA24-0084258-0001.C003

此照片仅限于随 SGS 正本报告使用

报告结束

Unless otherwise agreed in writing, this document is issued by the Company subject to its General Conditions of Service printed overleaf, available on request or accessible at http://www.sgs.com/en/Terms-and-Conditions.aspx and, for electronic format documents, subject to Terms and Conditions for Electronic Documents at http://www.sgs.com/en/Terms-and-Conditions/Terms-e-Document.aspx. Attention is drawn to the limitation of liability, indemnification and jurisdiction issues defined therein. Any holder of this document is advised that information contained hereon reflects the Company's findings at the time of its intervention only and within the limits of Client's instructions, if any. The Company's sole responsibility is to its Client and this document does not exonerate parties to a transaction from exercising all their rights and obligations under the transaction documents. This document cannot be reproduced except in full, without prior written approval of the Company. Any unauthorized alteration, forgery or falsification of the content or appearance of this document is unlawful and offenders may be prosecuted to the fullest extent of the law. Unless otherwise stated the results shown in this test report refer only to the sample(s) tested.
Attention: To check the authenticity of testing /inspection report & certificate, please contact us at telephone: (86-755) 8307 1443, or email: CN.Doccheck@sgs.com
3rd Building,No.889 Yishan Road Xuhui District,Shanghai China 200233 t E&E (86-21) 61402553 f E&E (86-21)64953679 www.sgsgroup.com.cn
中国·上海·徐汇区宜山路889号3号楼 邮编: 200233 t HL (86-21) 61402594 f HL (86-21)61156899 e sgs.china@sgs.com
Member of the SGS Group (SGS SA)

物質安全資料表

一、物品與廠商資料

物品名稱：CCP PBT 複合材料
其他名稱：1000, 2000,3000,4000,5000,6000,7000,8000系列
建議用途及限制使用：
製造商或供應商名稱、地址及電話：長春人造樹酯廠股份有限公司/台北市松江路301號7樓/(02)25001800
緊急聯絡電話/傳真電話：(07)3711301/(07)3710819

二、危害辨識資料

物品危害分類：NA

標示內容：NA
象徵符號：
警 示 語：
危害警告訊息：無
危害防範措拖：無

其他危害：

三、成分辨識資料

混合物
化學性質

危害物質成分之中英文名稱	濃度或濃度範圍（成分百分比）
Polybutylene Terephthalate	40～99
Glass Fiber	10～50
Additives	0.4～40

四、急救措施

不同暴露途徑之急救方法：
- 吸入： 當吸入加熱所產生之氣體時，應立即移至通風良好之處，如有必要則送醫治療。
- 皮膚接觸： 若被高溫的液體產物濺到皮膚，應立即沖水，冷卻後變硬之固體不可從傷處任意移走，經一段時間後會自行脫落，若情況危急應送醫治療。
- 眼睛接觸： 若被高溫的液體產物濺到眼睛，立即送醫並以大量的冷水沖洗。
- 食入： 無

最重要症狀及危害效應：無
對急救人員之防護：無
對醫師之提示：無

五、滅火措施

適用滅火劑：水、乾粉、泡沫、二氧化碳
滅火時可能遭遇之特殊危害：無
特殊滅火程序：依B級火災處理
消防人員之特殊防護設備：穿著個人防護裝備

六、洩漏處理方法

個人應注意事項：處理時應穿著個人防護裝備
環境注意事項：包裝袋洩露會造成環境污染

清理方法：直接以掃帚清理作爲回收料使用

七、安全處置與儲存方法

處置：作業時配戴防護手套,及防塵口罩,避免粉塵由口鼻吸入

儲存：應存放於乾燥及通風良好之處

八、暴露預防措施

工程控制：ND

控制參數			
八小時日時量平均 容許濃度 TWA	短時間時量平均 容許濃度 STEL	最高容許 濃度 CEILING	生物指標
依無毒粉塵標準 8HR 容許量 10mg/m3			ND

個人防護設備：

- 呼吸防護：防粉塵用防護面罩
- 手部防護：隔熱手套
- 眼睛防護：安全防護鏡
- 皮膚及身體防護：長袖工作服及安全鞋

衛生措施：工作後應徹底洗淨雙手

九、物理及化學性質

外觀： 固體	氣味：無臭
嗅覺閾值：	熔點：225℃
Ph值：ND	沸點/沸點範圍：>350
易燃性(固體,氣體)：	閃火點：>355 ℃
分解溫度：>300℃	測試方法：
自燃溫度：>420℃	爆炸界限：無可獲得的數據
蒸氣壓：ND	蒸氣密度：ND
密度： 1.3-1.7	溶解度： 不溶於水
辛醇／水分配係數(log Kow)：ND	揮發速率：ND

十、安定性及反應性

安定性：安定

特殊狀況下可能之危害反應： 粉塵危害

應避免之狀況：加熱至300℃以上

應避免之物質：強鹼,強氧化劑

危害分解物： ND

十一、毒性資料

暴露途徑：無

症狀：無

急毒性：無

慢毒性或長期毒性：無

十二、生態資料

生態毒性：NA

持久性及降解性：持久性

生物蓄積性：NA	
土壤中之流動性：NA	
其他不良效應：NA	

十三、廢棄處置方法

廢棄處置方法：PBT複合材料料頭外售,交由回收料廠商粉碎回收	

十四、運送資料

聯合國編號： Not regulated	
聯合國運輸名稱：Not regulated	
運輸危害分類：Not regulated	
包裝類別：SEA BULK,太空包,紙袋	
海洋污染物（是／否）：否	
特殊運送方法及注意事項：運送過程保持貨品乾燥	

十五、法規資料

適用法規：Not regulated	

十六、其他資料

參考文獻		
製表單位	名稱：長春人造樹脂廠股份有限公司高雄廠	
	地址/電話：高雄縣仁武鄉仁武村工業一路14號/(07)3711301	
製表人	職稱：副課長	姓名：吳福利
製表日期	2008/09/16 04:35:39 PM	修改日期 ：2008/09/16 04:35:39 PM
備註		

编号：LHES006

MSDS

1．物品成分与厂商资料	
厂商名称：浙江联和电子有限公司	物品编号：QSN6.5-0.1
	物品名称：磷铜端子
	纯物质：
	危害物质成分（%）无

2.成份辨识资料		
成份名称	化学文摘社登记号码(CAS No.)	浓度范围（成分百分比 Percentage (%)
铜(Cu)	7440-50-8	余量
磷(P)	7723-14-0	0.0026-0.005%
锌(Zn)	7440-66-6	0.03-0.04%
镍(Ni)	7440-02-0	0.054-0.063%
锑（Sb）	7440-36-0	0.00015%
铅(Pb)	7439-92-1	＜0.005%
铁(Fe)	7439-89-6	0.005-0.0059%
纯镍(Ni)	7440-02-0	0.054-0.063%
纯锡(Sn)	7440-31-5	6.2 %

2．危害辨认资料	
严重危害效应	健康危害效应：本产品在固体时不具健康危害及危害
	环境影响：本产品在固体时对环境不具影响
	物理性及化学性危害:固体/无味/多色
	特殊危害：固体时（防火或高温）无特殊危害
主要症状：无	

3．急救措施	
急救方法	吸入：无吸入
	皮肤接触：接触无危害
	食入：无食入
主要症状及危害效应：无	

4．灭火措施
通用灭火器：二氧化碳，泡沫，干粉化学灭火器，水雾等
灭火时可能遭遇之特殊危害：会引起火灾
消防人员之特殊防护装备：使用从氧式吸防护具

5．泄漏处理方法
个人应注意事项：注意工作台面清洁，作业时及时清洗手
环境注意事项：将泄漏之物料以容器盛装以便回收或废弃
清理方式：工作台面每天作业前/后须檫试干净，建议可以戴手套或手指套作业

6．安全处置与储存方法
处置：废弃物可送到政府许可的废弃物处理中心进行处理

储存：空调仓，23±5℃，湿度 65%以下，仓库里面安装灭火器		
7. 暴露预防措施		
个人防护设备	呼吸防护：口罩，一般无此要求，可以建议采用	
	手部防护设备：手套火手指套，一般无此要求，可以建议采用	
	眼睛防护：安全目镜或眼镜	
	皮肤及身体防护：穿工作服，经常勤洗	
卫生措施：建议使用安全目镜，进食前应洗手及脸部，平时多运动，保持健康体力		
8. 物料及化学性质		
物质状态：固体	形状：连接器	
颜色：多色	气味：无味	
PH 值：未测定	沸点：未测定	
分解温度：未测定	爆炸介限：无	
自然温度：固体无	溶解度：固体无	
9. 安全性及反应性		
安全性：正常状态下安全		
特殊状况下可能之危害反应：无		
应避免之状况：避免接触火源和太阳光直照射		
应避免之物质：火和酸碱性物质		
危害分解物：无		
10. 毒性资料		
急毒性	吸人：无	
	皮肤接触：无	
	眼睛：无	
局部效应：无		特殊效应：无
11. 废弃物处理方法：废弃物可送到政府许可的废弃物处理中心进行处理		
12. 运送资料		
联合国编号：无		运输规定：并无危险分类
运送方法及注意事项：勿重压，轻拿轻放		
13. 适用法规：1.劳工安全卫生设施规划；2.危害物及有害物通讯规划；3.索尼环境通用规定；4 劳工用业环境空气中有害物容许溶度标准；5 道路交通安全规划		
14. 其他资料：		
15.法规资料		
适用法规	1.劳工安全卫生设施规则 2.RoHS 法规及有害物通识规则	
16.其它资料		
参考文献	有害化学物质中文资料库，环保局	
制表单位	浙江联和电子有限公司	
制造商及供应商地址	浙江省温州乐清市乐清湾港区创新路8号	
电话	0577-62383699	
制表者	季育文	
制表日期	2022-3-23	