浙 江 联 和 电 子 有 限 公 司

ZHEJIANG LIANHE ELECTRONICS CO.,LTD.

承　认　书

SPECIFCATION FOR APPROVAL

客 户 名 称 CUSTOMER	
品 名 DESCRIPTION	MX3.0压接式条形连接器
料 号 CUSERTOMER PART NO	C3001&C3002&A3001
日 期 DATE	

客 户 确 认（APPROVED SIGNATURES）

核准（APPROVAL）	工程（ENGINEERING）	品管（QC）
承认结果：	☐ 承认　☐ 不承认	☐ 重新送样

浙江联和电子有限公司
ZHEJIANG LIANHE ELECTRONICS CO.,LTD.
地址：浙江省乐清市乐清湾港区创新路
Address：Chuangxin Road,YueQing Bay Port Zone,Yueqing City,Zhejiang China 325600.
Tel：0577-62383668(销售)　0577-62383212(Sales)
Fax：0577-62382566
Web：lhecn.1688.com(中文) www.lhecn.net.cn(English)

目　　录

1. 封面(COVER) ……1

2. 目录(CATALOGUE)……2

3. 命名和图纸(NAMING AND DRAWING)……3-43

4. 规格书(SPECIFICATION)……44-48

5. 实验报告(TEST REPORT)……49-51

6. 认证(CERTIFICATION)……52-59

7. PA66 RoHS报告(PA66 RoHS REPORT)……60-71

8. 端子RoHS报告(TERMINAL RoHS REPORT) ……72-78

9. LCP RoHS报告(LCP RoHS REPORT) ……79-88

10. MSDS ……89-101

11. 反馈与建议(FEEDBACK AND SUGGESTIONS)……102

核准（APPROVAL）	确认（CHECK）	制作（PREPARE）

MX3.0型料号说明 Description of item number

壳体料号说明 HOUSING

C 3001 - S H B 02 X2 - N* - * - ** - ** - ** - **

A: Wire to Board Connectors
B: Board-in Connectors
C: Wire to Wire Connectors
D: Hard Splices Connectors
F: FFC/FPC Connectors
I : IDC

系列号 Series Number

特征类别(默认空)
Feature Category: S=锁片型

产品类别 H=壳体 Housing
P=密封件 Water Proofing
Product Category: F=配件 Fitting

同类别多型号序号 (默认空)
Same Series Different Type: B~ZZ

单列极数 The Pin Number of Single Row: 01~**

多列列数 The Pin Number of Several Row: X2~X* (无则空)

M为堵孔，*为堵孔序号(例M1.2.5)(无则空)

壳体材料
Housing Material:
1=PA66
2=PA66灼热丝-G
3=PA46
4=PA6T
5=PA9T
6=PBT
7=PPO
8=LCP
9=U=UL
10=PC
11=PA66无卤灼热丝
12=PA66高灼热丝B
13=PA66增强

壳体材料特性
Housing Material Specialty:
V2 UL阻燃等级标准(默认不注明)
V0 UL阻燃等级标准
Z=灼热丝是按照(IEC60695/GB/T5169)标准,
符合GWIT750℃,GWFI960℃
ZG=灼热丝加玻纤

壳体颜色
Housing Color:
OR=橙色 Orange
P=粉色 Pink
R=红色 Red
VI=紫色 Violet
Y=黄色 Yellow
GY=灰色 Gray
BK=黑色 Black
G=绿色 Green
BL=蓝色 Blue
BR=棕色 Brown
TR=透明白 Transparent
W=白色 White
EC=米白 ECRU
TG=透明绿 Transparent Green
壳体材料2/3/4/5/8/12默认米色
壳体材料7默认黑色
壳体材料1/6/9/10/11默认白色
壳体材料13默认透明
(默认可为空)

无卤标识
无卤产品加HF,有卤默认为空

客户专用代码
Customer Special Code: 表示和常规件不同,用来代表某个客户

备注:*部分内容只在产品标签中体现! 其他特殊要求位置不固定

MX3.0型料号说明 Description of item number

针座料号说明 WAFER

C 3001 -DHWVB 02 X2 - N* - C* - ** - ** - * - ** - ** - ** - ** - **

A: Wire to Board Connectors
F: FFC/FPC Connectors
I : IDC

系列号 Series Number

特征类别(默认空)H=高背型 High box type
Feature Category: D=固定防呆柱 Fixed
DB=防呆柱+全包
B=全包 All inclusive
DH=防呆柱+高背型

产品类别 Product Category:
WV=直针座 Straight Angle
WR=弯针座 Right Angle
SV=立贴式 V-SMT
SR=卧贴式 R-SMT

同类别多型号序号 (默认空)
Same Series Different Type: B~ZZ

单列极数 The Pin Number of Single Row: 01~**

多列列数 The Pin Number of Several Row: X2~X* (无则空)

N为缺针,M为堵孔,*为序号(例N1.2.5)(无则空)

C为插针样式不同(除打点、缺针外)*为序号(无则空)

打点样式
Point Style:K为打点,K2.4表示在第2枚,第4枚上打点,默认打点无数字标注(无则空)

接触件材料 Contact Material: P=磷青铜 Phos.Bronze
B=黄铜 Brass

表面处理 Surface Processing:
0=素材酸洗 None
1=镀镍 Nickel Plating
2=镀亮锡 Tin Plating
3=镀镍氩光锡 Matt Tin-Nickel Plating
4=镀铅锡 Tin-Lead Plating
5=镀铜锡 Tin-Cu Plating
6=镀镍银 Silver-Nickel Plating
7=镀镍金 Gold-Nickel Plating
8=镀镍局部金 Half Gold-Nickel Plating
9=镀亮锡局部金 Half Gold-Tin Plating
10=镀镍亮锡 Tin-Nickel Plating (A5001默认B3)

壳体材料 Housing Material:
1=PA66
2=PA66灼热丝-G
3=PA46
4=PA6T
5=PA9T
6=PBT
7=PPO
8=LCP
9=U=UL
10=PC
11=PA66无卤灼热丝
12=PA66高灼热丝B
13=PA66增强

壳体材料特性 Housing Material Specialty:
V2 UL阻燃等级标准(默认不注明)
V0 UL阻燃等级标准
Z=灼热丝是按照(IEC60695/GB/T5169)标准,
符合GWIT750℃,GWFI960℃
ZG=灼热丝加玻纤

其他特殊要求
Other Special Requirements: 如:SE(对固定力要求高5N)

壳体颜色 Housing Color:
OR=橙色 Orange
P=粉色 Pink
R=红色 Red
VI=紫色 Violet
Y=黄色 Yellow
GY=灰色 Gray
BK=黑色 Black
G=绿色 Green
BL=蓝色 Blue
BR=棕色 Brown
TR=透明白 Transparent
W=白色 White
EC=米白 ECRU
TG=透明绿 Transparent Green

壳体材料2/3/4/5/8/12默认米色
壳体材料7默认黑色
壳体材料1/6/9/10/11默认白色
壳体材料13默认透明 (默认可为空)

无卤标识
无卤产品加HF,有卤默认为空

客户专用代码
Customer Special Code: 表示和常规件不同,用来代表某个客户

备注:*部分内容只在产品标签中体现! 其他特殊要求位置不固定

MX3.0型料号说明 Description of item number

端子料号说明 TERMINAL

C 3001 N - T 2 2 A 30 5 P 2(*) Y - 1 - *(*) *

A: Wire to Board Connectors
B: Board-in Connectors
C: Wire to Wire Connectors
F: FFC/FPC Connectors
I : IDC
D: Chain Terminals and Splices

系列号 Series Number

特征类别(默认空) Feature Category:
K=直形带锁 N=直形
Z=旗形带锁 Q=旗形
X=横插带锁 H=横插
Y=叉形端子 J=插 片
R=环形端子 C=圆形
G=接线端子
W=鲨鱼齿端子
B=子弹形端子
U=耳扒形端子

产品类别 Product Category: T=端子 Terminal

同类别多型号序号 (默认空)
Same Series Different Type: 1~9

同型号多尺寸序号 (默认空)
Same Type Different size: 1~9

适用线规(默认空) Applicable Wire: A=小脚 B=中脚 C=高脚 D=大脚

料带厚度单位: mm X100 (0.3X100=30 默认空)

配合厚度单位: mm X10 (0.5X10=5 默认空)
注: 所有<灰色>说明, 为D系列分类附加料号及说明!

材质 Material:
Z=紫铜 Copper
S=不锈钢 Stainless Steel
P=磷青铜 Phos.Bronze
B=黄铜 Brass

表面处理 Surface processing:
0=素材酸洗 None
1=镀镍 Nickel Plating
2=镀亮锡 Tin Plating
3=镀镍氩光锡 Matt Tin-Nickel Plating
4=镀铅锡 Tin-Lead Plating
5=镀铜锡 Tin-Cu Plating
6=镀镍银 Silver-Nickel Plating
7=镀镍金 Gold-Nickel Plating
8=镀镍局部金 Nickel-Gold
9=镀亮锡局部金 Half Gold-Tin Plating
10=镀镍亮锡 Tin-Nickel Plating

镀层厚度(默认为空)

包装说明: Y=有字、N=无字

包装方式: 0=散装(袋装)、1=盘装、4=八角盘装、5=编带装 (常规默认为空)

包装数量: -**K: 客户定制数量,默认数量为空

客户专用代码
Customer Special Code: 表示和常规件不同,用来代表某个客户

其他说明: 如(U)=UL、软、低铅等

备注:表面处理内容只在产品标签中体现! 其他特殊要求位置不固定

其它料号说明 OTHER

P 0001 - B

P: Other Types

产品序号 Product Number

同型号序号 Same Series Different Type: B~Z
(默认空)

MX3.0型连接器承认图面

REV	DESCRIPTION	DATE
A/0	原 始 版 本	E
A/1	修 订 版 本	

安装尺寸Mounting Measurement

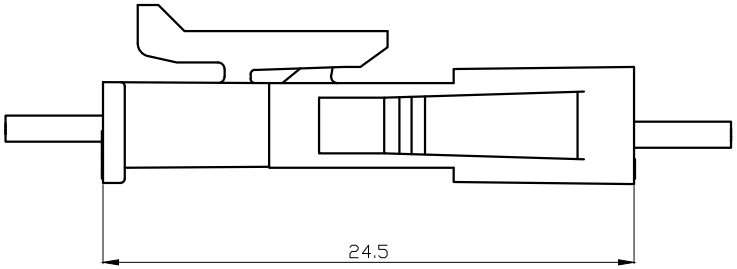

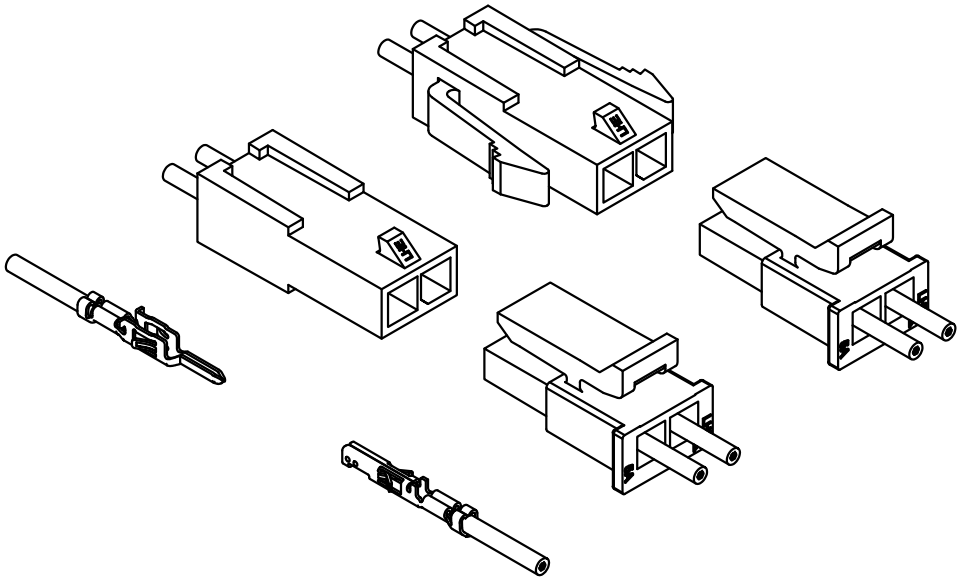

未 注 公 差			
X.° ±3° X.X° ±0.5°			
>0-3	>3-18	>18-50	>50-120
±0.12	±0.15	±0.3	±0.5
制 作	审 核	批 准	

LHE® 浙江联和电子有限公司
ZHEJIANG LIANHE ELECTRONICS CO.,LTD

单位	比例	Design Units	SIZE	页码
MM Only	——	METRIC	A4	
材 料	图 号			Part No.
见图解	品 名	MX3.0单排安装图示		

旧底图总号

底图总号

签 字

日 期

MX3.0型连接器承认图面

REV	DESCRIPTION	DATE
A/0	原 始 版 本	E
A/1	修 订 版 本	

安装尺寸Mounting Measurement

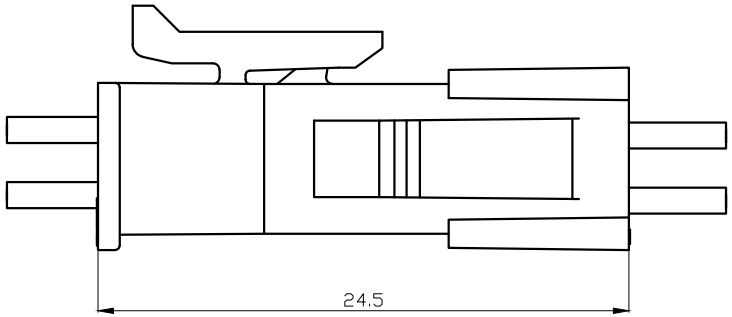

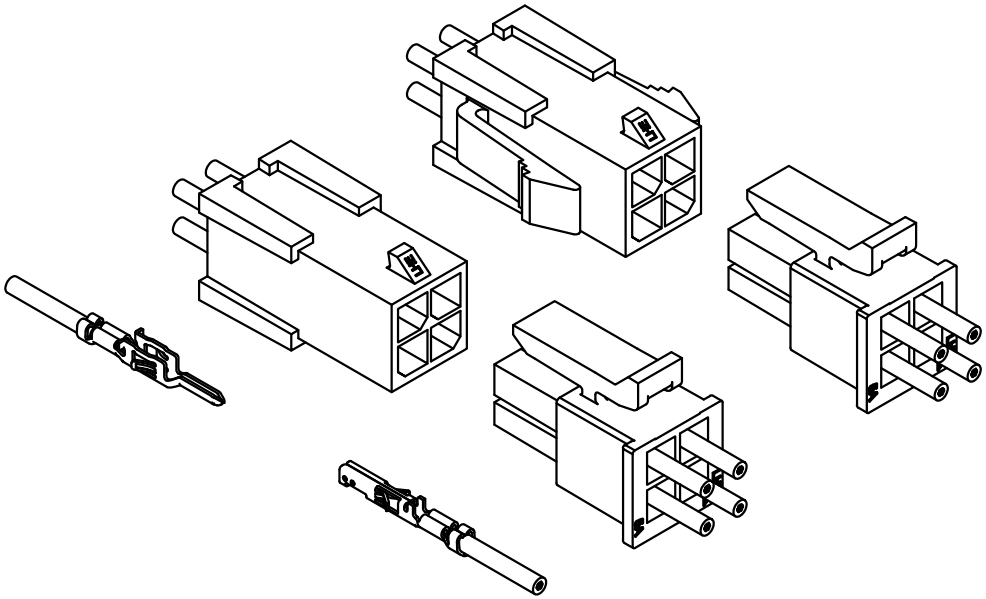

未 注 公 差				LHE® 浙江联和电子有限公司 ZHEJIANG LIANHE ELECTRONICS CO.,LTD					
X.° ±3° X.X° ±0.5°									
>0-3	>3-18	>18-50	>50-120	单位	比例	Design Units	SIZE	页码	
±0.12	±0.15	±0.3	±0.5	MM Only	——	METRIC	A4		
制 作	审 核	批 准		材 料	图 号			Part No.	
				见图解	品 名	MX3.0双排安装图示			

旧底图总号
底图总号
签 字
日 期

MX3.0型连接器承认图面

REV	DESCRIPTION	DATE
A/0	原 始 版 本	E
A/1	修 订 版 本	

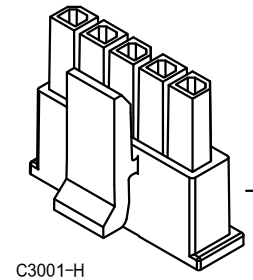

C3001-H

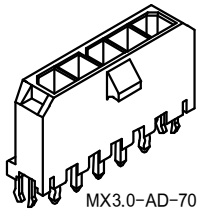

MX3.0-AD-70
MX3.0-AC-70

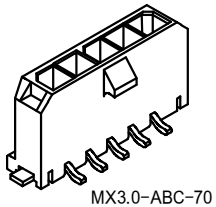

MX3.0-ABC-70
MX3.0-AB-79

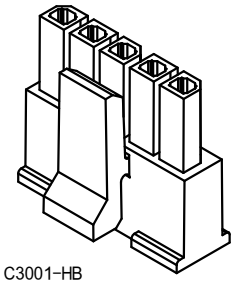

C3001-HB

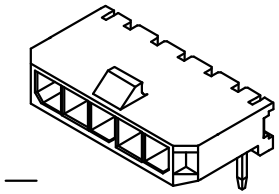

MX3.0-AWD-70
MX3.0-AWC-70

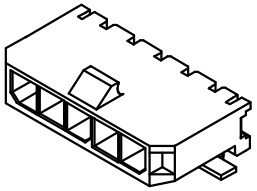

MX3.0-AWBC-70
MX3.0-AWB-79
MX3.0-AWBD-70
MX3.0-AWBDB-70

旧底图总号
底图总号
签 字
日 期

未 注 公 差				LHE® 浙江联和电子有限公司 ZHEJIANG LIANHE ELECTRONICS CO.,LTD					
X.° ±3° X.X° ±0.5°									
>0-3	>3-18	>18-50	>50-120	单位	比例	Design Units	SIZE	页码	
±0.12	±0.15	±0.3	±0.5	MM Only	——	METRIC	A4		
制 作	审 核	批 准		材 料	图 号			Part No.	
				见图解	品 名	MX3.0胶壳与针座单排安装图示			

MX3.0型连接器承认图面

REV	DESCRIPTION	DATE
A/0	原 始 版 本	E
A/1	修 订 版 本	

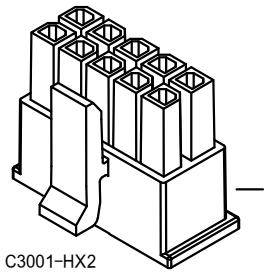

C3001-HX2

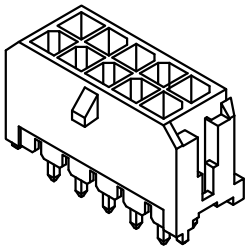

MX3.0-2XAD-79
MX3.0-2XAD-70
MX3.0-2XAC-70

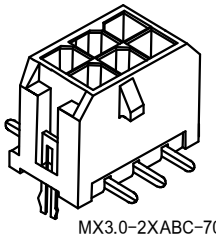

MX3.0-2XABC-70
MX3.0-2XAB-79

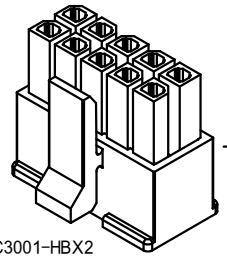

C3001-HBX2

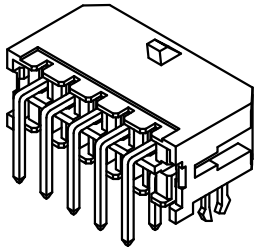

MX3.0-2XAWD-70
MX3.0-2XAWC-70

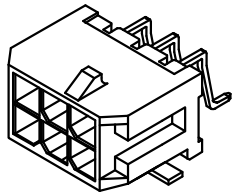

MX3.0-2XAWBC-70
MX3.0-2XAWB-79
MX3.0-2XAWBD-70
MX3.0-2XAWBDB-70

未 注 公 差				LHE® 浙江联和电子有限公司 ZHEJIANG LIANHE ELECTRONICS CO.,LTD					
X.° ±3° X.X° ±0.5°									
>0-3	>3-18	>18-50	>50-120	单位	比例	Design Units	SIZE	页码	
±0.12	±0.15	±0.3	±0.5	MM Only	——	METRIC	A4		
制 作	审 核	批 准		材 料	图 号			Part No.	
				见图解	品 名	MX3.0胶壳与针座双排安装图示			

旧底图总号
底图总号
签 字
日 期

MX3.0连接器承认图面

REV	SYM	REVISION RECORD	DR.	APPR.	DATE
A/0		原 始 版 本			A/0
A/1					
A/2		Part NO.由MX3.0-NY改为MX3.0-1XNY			20190921
A/3		新增C3001-HB系列			20190924

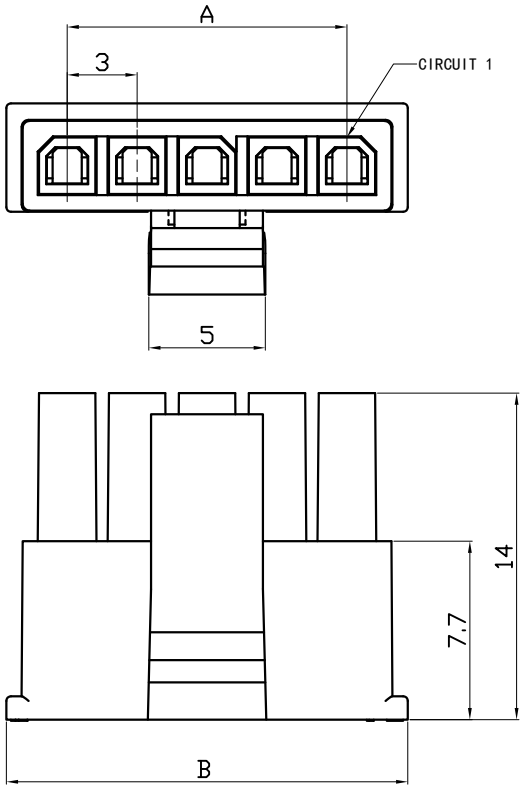

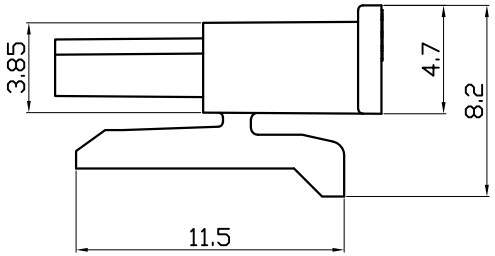

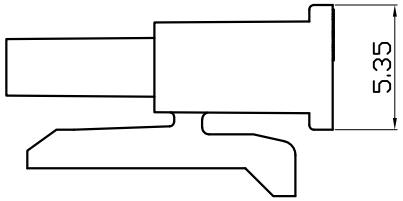

C3001-HB03~12

Poles	Part NO.		Dimensions mm A	Dimensions mm B
2	C3001-H02	MX3.0-2Y	3.00	8.20
3	C3001-H03	MX3.0-3Y	6.00	11.20
4	C3001-H04	MX3.0-4Y	9.00	14.20
5	C3001-H05	MX3.0-5Y	12.00	17.20
6	C3001-H06	MX3.0-6Y	15.00	20.20
7	C3001-H07	MX3.0-7Y	18.00	23.20
8	C3001-H08	MX3.0-8Y	21.00	26.20
9	C3001-H09	MX3.0-9Y	24.00	29.20
10	C3001-H10	MX3.0-10Y	27.00	32.20
11	C3001-H11	MX3.0-11Y	30.00	35.20
12	C3001-H12	MX3.0-12Y	33.00	38.20
2	C3001-HB02	MX3.0-2YB	3.00	6.90
3	C3001-HB03	MX3.0-3YB	6.00	9.90
4	C3001-HB04	MX3.0-4YB	9.00	12.90
5	C3001-HB05	MX3.0-5YB	12.00	15.90
6	C3001-HB06	MX3.0-6YB	15.00	18.90
7	C3001-HB07	MX3.0-7YB	18.00	21.90
8	C3001-HB08	MX3.0-8YB	21.00	24.90
9	C3001-HB09	MX3.0-9YB	24.00	27.90
10	C3001-HB10	MX3.0-10YB	27.00	30.90
11	C3001-HB11	MX3.0-11YB	30.00	33.90
12	C3001-HB12	MX3.0-12YB	33.00	36.90

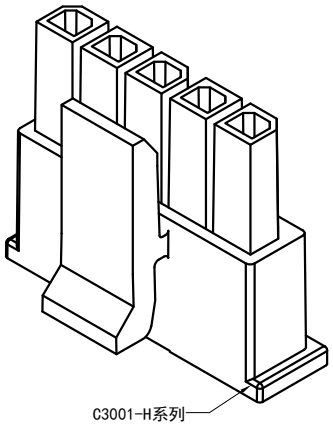

C3001-H系列
左右有抓手

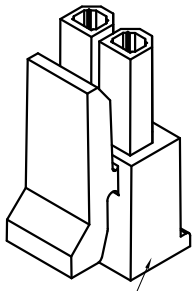

C3001-HB02
左右上均无抓手

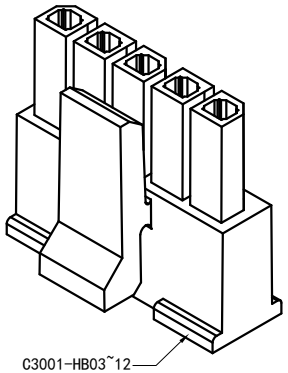

C3001-HB03~12
此处有抓手

序号	图 号	名 称	材 料	数量	附 注
1		Housing	PA66(UL94V-0)	1	Black

未 注 公 差
X.° ±3° X.X° ±0.5°

>0-3	>3-18	>18-50	>50-120
±0.12	±0.15	±0.3	±0.5

LHE® 浙江联和电子有限公司
ZHEJIANG LIANHE ELECTRONICS CO.,LTD

单位	比例	Design Units	SIZE	页码
MM Only	——	METRIC	A4	

制 作	审 核	批 准	材 料	图 号	Part No.
			见图解	品 名	MX3.0-NY

旧底图总号
底图总号
签 字
日 期

MX3.0连接器承认图面

REV	SYM	REVISION RECORD	DR.	APPR.	DATE
A/0		原 始 版 本			A/0
A/1					

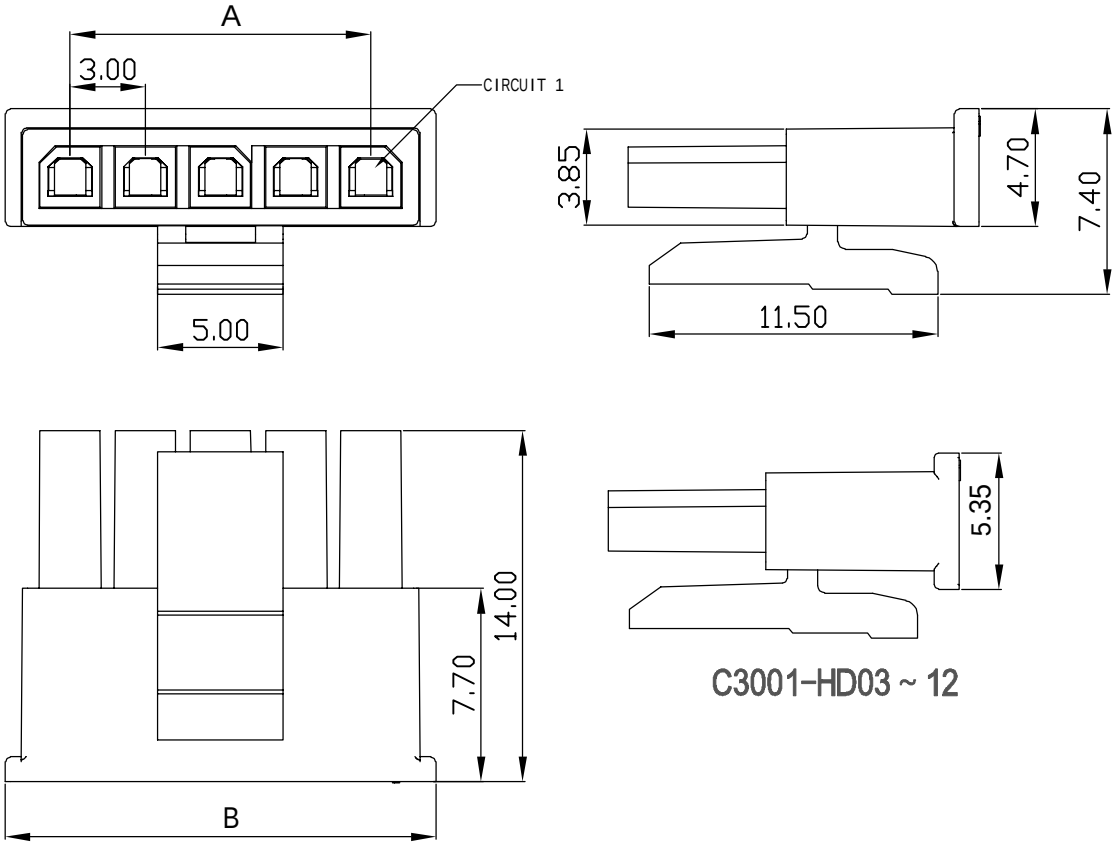

C3001-HD03 ~ 12

Poles	Part NO.		Dimensions mm A	Dimensions mm B
2	C3001-HC02	MX3.0-2YC	3.00	8.20
3	C3001-HC03	MX3.0-3YC	6.00	11.20
4	C3001-HC04	MX3.0-4YC	9.00	14.20
5	C3001-HC05	MX3.0-5YC	12.00	17.20
6	C3001-HC06	MX3.0-6YC	15.00	20.20
7	C3001-HC07	MX3.0-7YC	18.00	23.20
8	C3001-HC08	MX3.0-8YC	21.00	26.20
9	C3001-HC09	MX3.0-9YC	24.00	29.20
10	C3001-HC10	MX3.0-10YC	27.00	32.20
11	C3001-HC11	MX3.0-11YC	30.00	35.20
12	C3001-HC12	MX3.0-12YC	33.00	38.20
2	C3001-HD02	MX3.0-2YD	3.00	6.90
3	C3001-HD03	MX3.0-3YD	6.00	9.90
4	C3001-HD04	MX3.0-4YD	9.00	12.90
5	C3001-HD05	MX3.0-5YD	12.00	15.90
6	C3001-HD06	MX3.0-6YD	15.00	18.90
7	C3001-HD07	MX3.0-7YD	18.00	21.90
8	C3001-HD08	MX3.0-8YD	21.00	24.90
9	C3001-HD09	MX3.0-9YD	24.00	27.90
10	C3001-HD10	MX3.0-10YD	27.00	30.90
11	C3001-HD11	MX3.0-11YD	30.00	33.90
12	C3001-HD12	MX3.0-12YD	33.00	36.90

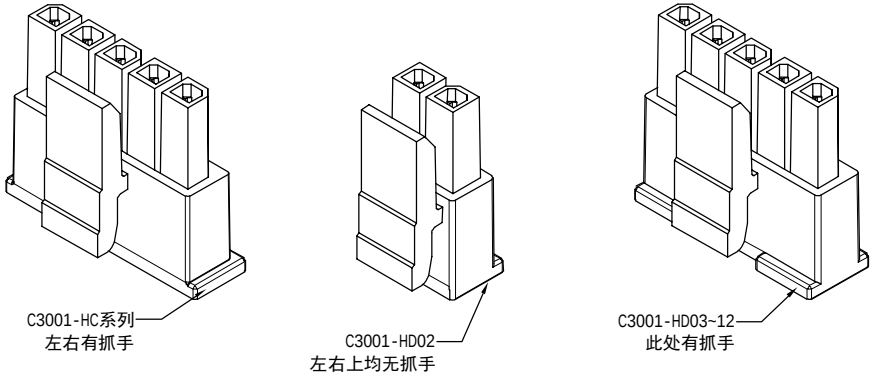

序号	图 号	名 称	材 料	数量	附 注
1		Housing	PA66(UL94V-0)	1	Black

未 注 公 差

X.°±3° X.X°±0.5°

>0-3	>3-18	>18-50	>50-120
±0.12	±0.15	±0.3	±0.5

LHE® 浙江联和电子有限公司
ZHEJIANG LIANHE ELECTRONICS CO.,LTD

单位	比例	Design Units	SIZE	页码
MM Only	——	METRIC	A4	

制 作	审 核	批 准	材 料	图 号	Part No.
			见图解	品 名	MX3.0-NY*

旧底图总号

底图总号

签 字

日 期

MX3.0连接器承认图面

REV	SYM	REVISION RECORD	DR.	APPR.	DATE
A/0		原 始 版 本			A/0

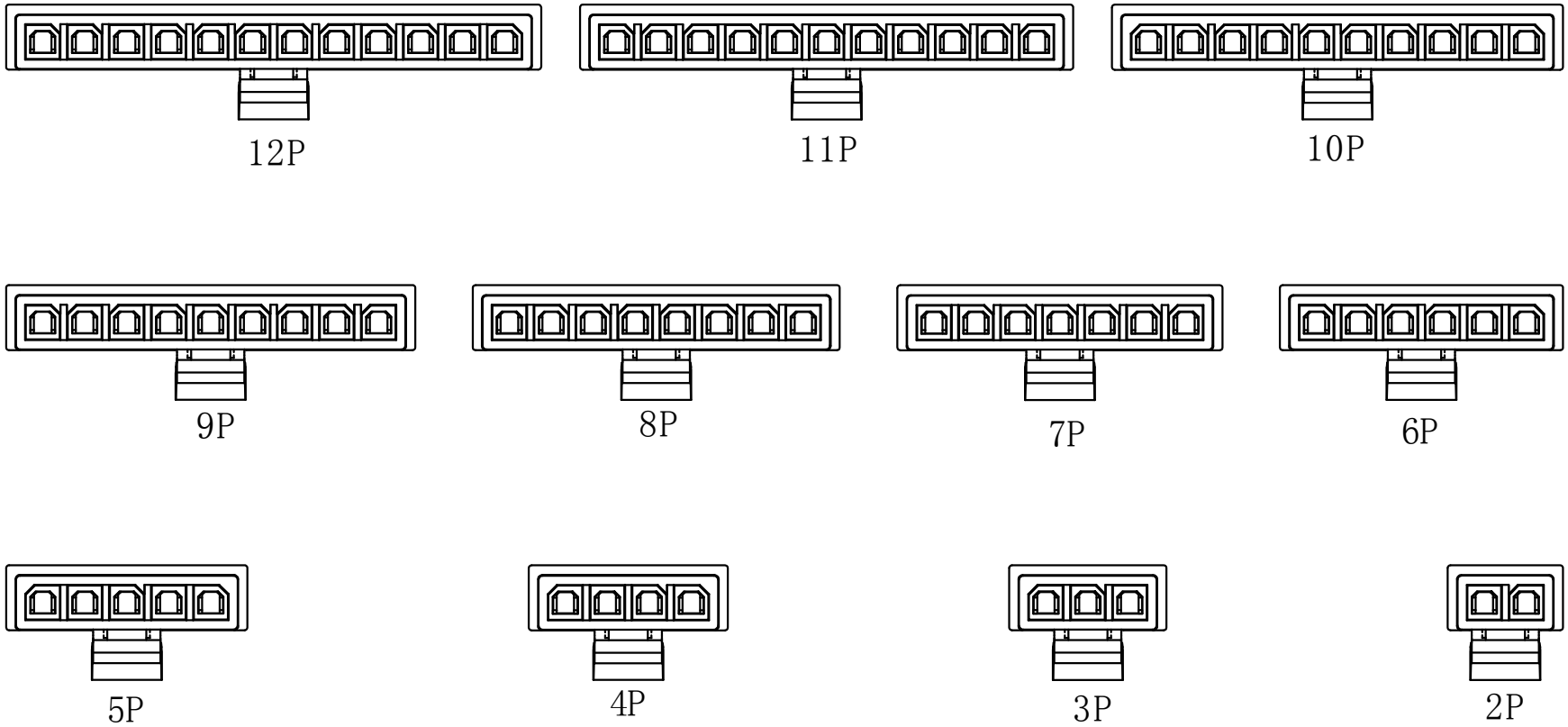

未 注 公 差				LHE® 浙江联和电子有限公司 ZHEJIANG LIANHE ELECTRONICS CO.,LTD					
X.° ±3° X.X° ±0.5°									
>0-3	>3-18	>18-50	>50-120	单位	比例	Design Units	SIZE	页码	
±0.12	±0.15	±0.3	±0.5	MM Only	——	METRIC	A4		
制 作	审 核	批 准		材 料	图 号			Part No.	
				见图解	品 名	MX3.0-NY端口图示			

旧底图总号
底图总号
签 字
日 期

MX3.0连接器承认图面

REV	SYM	REVISION RECORD	DR.	APPR.	DATE
A/0		原 始 版 本			A/0
A/1		Part NO.由C3004改为C3001			20171022
A/2		新增C3001-HBX2			20190928

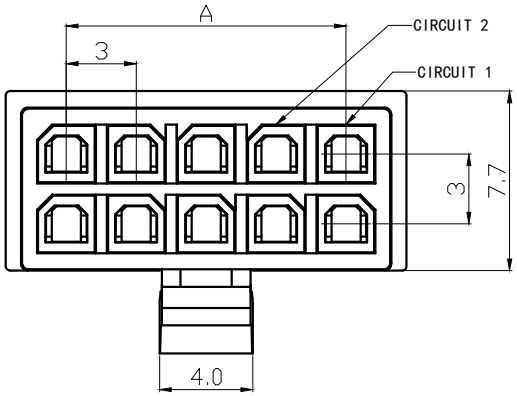

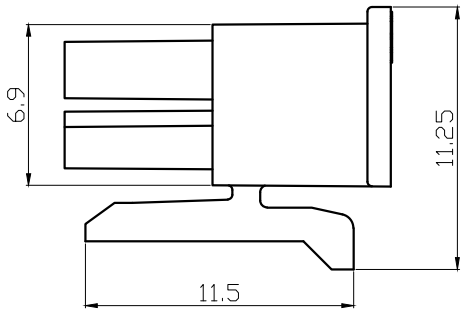

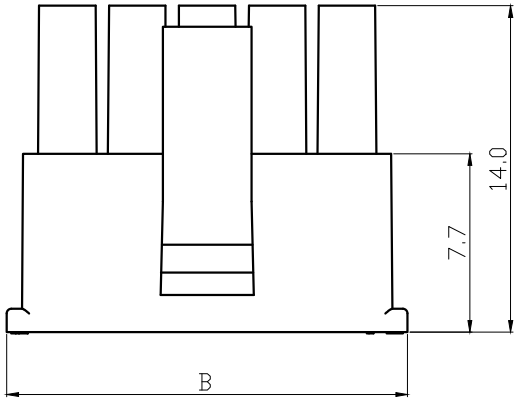

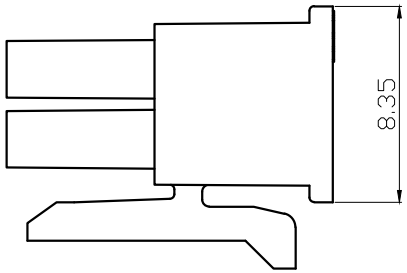

C3001-HB02X2~12X2

Poles	Part NO.		Dimensions mm A	Dimensions mm B
2	C3001-H01X2	MX3.0-2X1Y	--	5.20
4	C3001-H02X2	MX3.0-2X2Y	3.00	8.20
6	C3001-H03X2	MX3.0-2X3Y	6.00	11.20
8	C3001-H04X2	MX3.0-2X4Y	9.00	14.20
10	C3001-H05X2	MX3.0-2X5Y	12.00	17.20
12	C3001-H06X2	MX3.0-2X6Y	15.00	20.20
14	C3001-H07X2	MX3.0-2X7Y	18.00	23.20
16	C3001-H08X2	MX3.0-2X8Y	21.00	26.20
18	C3001-H09X2	MX3.0-2X9Y	24.00	29.20
20	C3001-H10X2	MX3.0-2X10Y	27.00	32.20
22	C3001-H11X2	MX3.0-2X11Y	30.00	35.20
24	C3001-H12X2	MX3.0-2X12Y	33.00	38.20
2	C3001-HB01X2	MX3.0-2X1YB	--	3.90
4	C3001-HB02X2	MX3.0-2X2YB	3.00	6.90
6	C3001-HB03X2	MX3.0-2X3YB	6.00	9.90
8	C3001-HB04X2	MX3.0-2X4YB	9.00	12.90
10	C3001-HB05X2	MX3.0-2X5YB	12.00	15.90
12	C3001-HB06X2	MX3.0-2X6YB	15.00	18.90
14	C3001-HB07X2	MX3.0-2X7YB	18.00	21.90
16	C3001-HB08X2	MX3.0-2X8YB	21.00	24.90
18	C3001-HB09X2	MX3.0-2X9YB	24.00	27.90
20	C3001-HB10X2	MX3.0-2X10YB	27.00	30.90
22	C3001-HB11X2	MX3.0-2X11YB	30.00	33.90
24	C3001-HB12X2	MX3.0-2X12YB	33.00	36.90

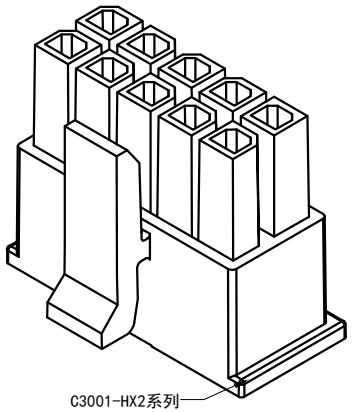

C3001-HX2系列
左右有抓手

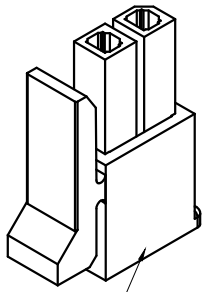

C3001-HB01X2
左右上均无抓手

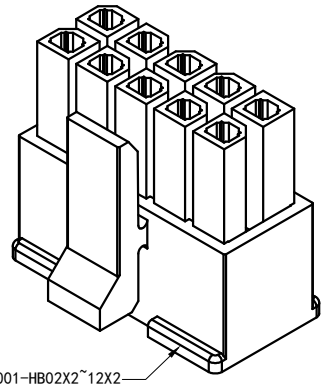

C3001-HB02X2~12X2
此处有抓手

序号	图 号	名 称	材 料	数量	附 注
1		Housing	PA66(UL94V-0)	1	Black

未 注 公 差
X.° ±3° X.X° ±0.5°

LHE® 浙江联和电子有限公司
ZHEJIANG LIANHE ELECTRONICS CO.,LTD

>0-3	>3-18	>18-50	>50-120	单位	比例	Design Units	SIZE	页码
±0.12	±0.15	±0.3	±0.5	MM Only	——	METRIC	A4	

制 作	审 核	批 准	材 料	图 号		Part No.
			见图解	品 名	MX3.0-2×NY	

日底图总号	
底图总号	
签 字	
日 期	

MX3.0连接器承认图面

REV	SYM	REVISION RECORD	DR.	APPR.	DATE
A/0		原 始 版 本			A/0

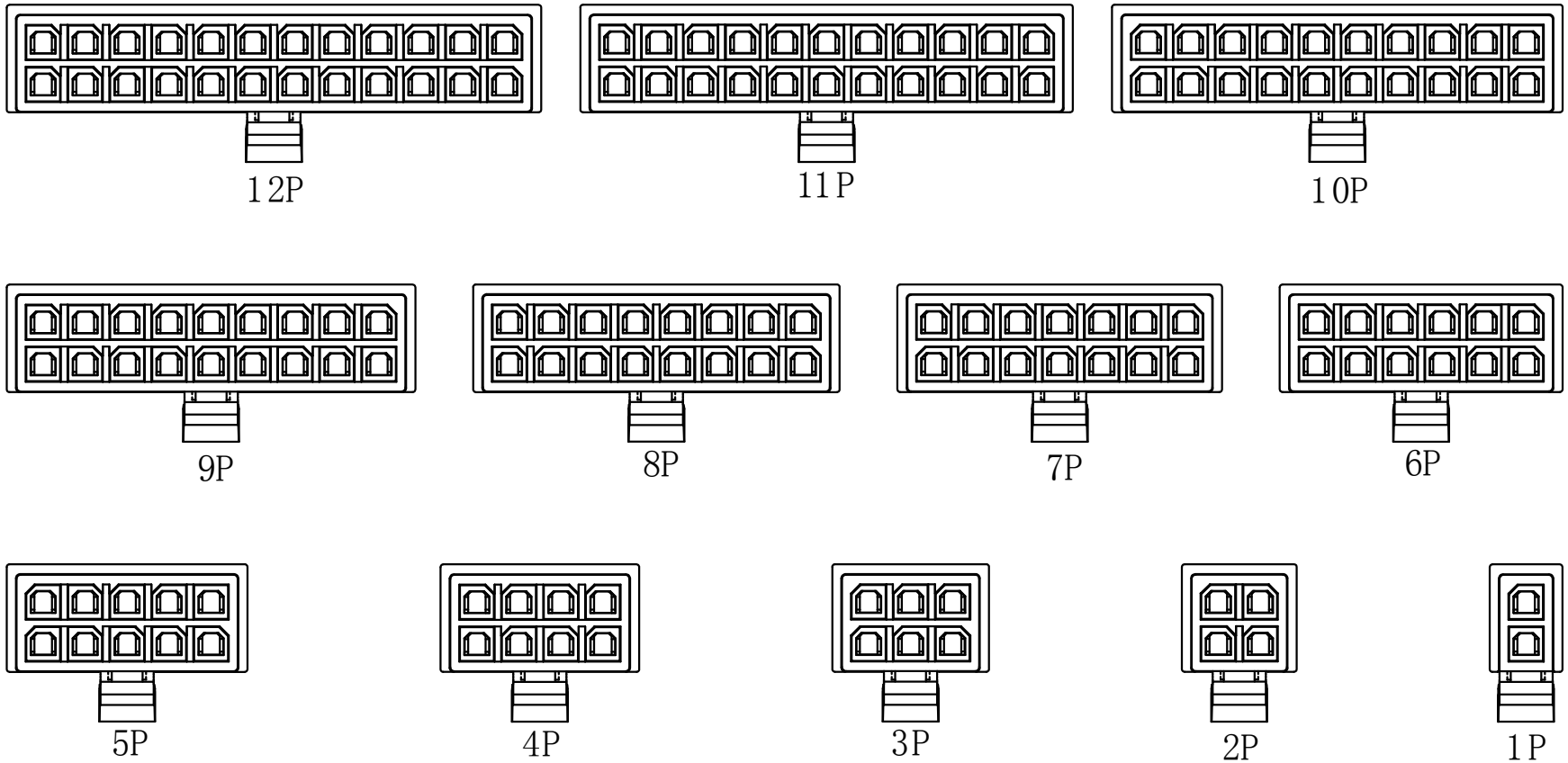

未 注 公 差				LHE® 浙江联和电子有限公司 ZHEJIANG LIANHE ELECTRONICS CO.,LTD					
X.° ±3° X.X° ±0.5°									
>0-3	>3-18	>18-50	>50-120	单位	比例	Design Units	SIZE	页码	
±0.12	±0.15	±0.3	±0.5	MM Only	——	METRIC	A4		
制 作	审 核	批 准		材 料	图 号			Part No.	
				见图解	品 名	MX3.0-2XNY端口图示			

旧底图总号
底图总号
签 字
日 期

MX3.0型连接器承认图面

REV	SYM	REVISION RECORD	DR.	APPR.	DATE
A/0		原 始 版 本			A/0
A/1		由C3004T改为C3001-T			20171022
A/2		新增YT12(YT12单点)			20171108
A/3		YT11背部连体改成T12式镂空			20171219
A/4		取消端子表面处理说明			20220402
A/5		增加公差	SL	①	20220615
A/6		高低温环境测试从85℃,更新到105℃.更改电流	YF		20220929

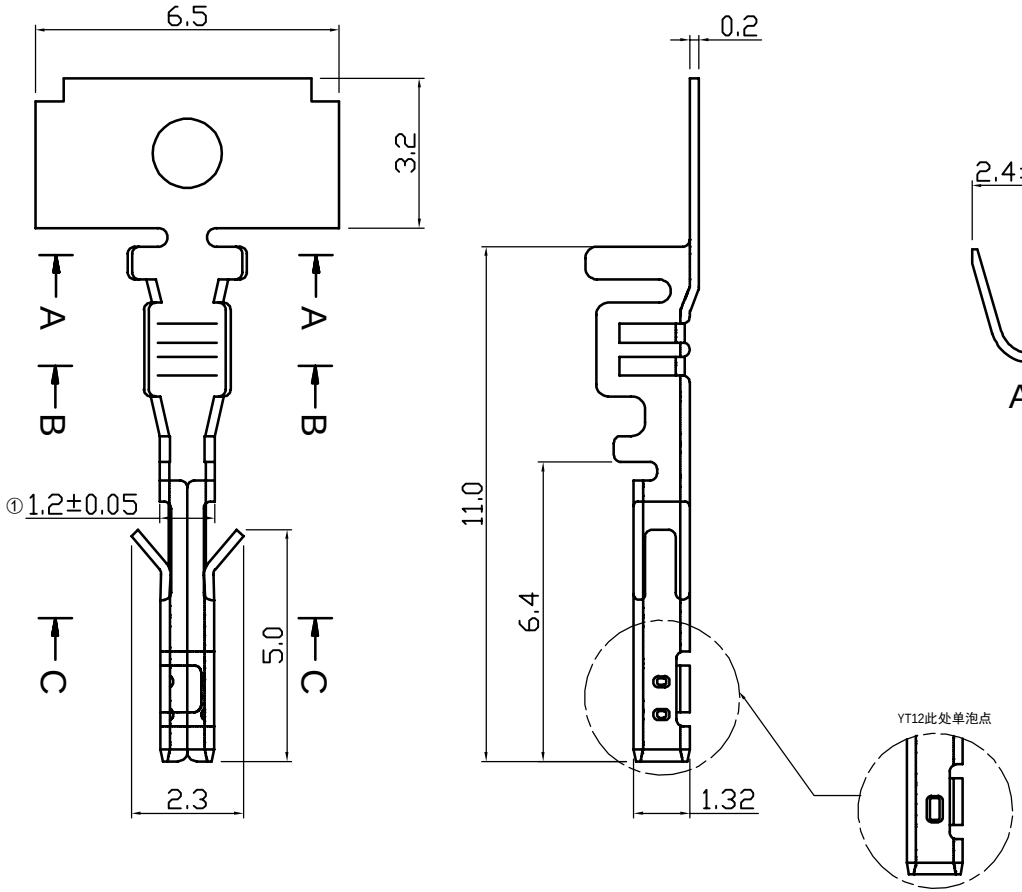

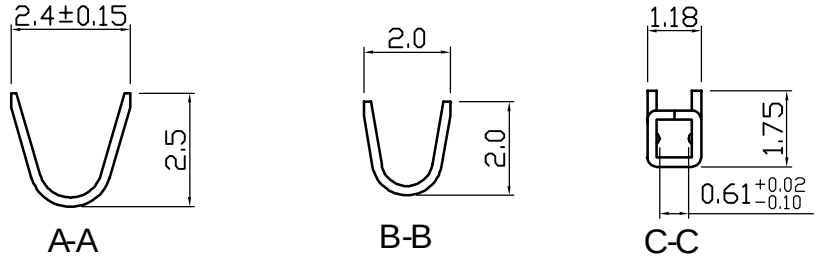

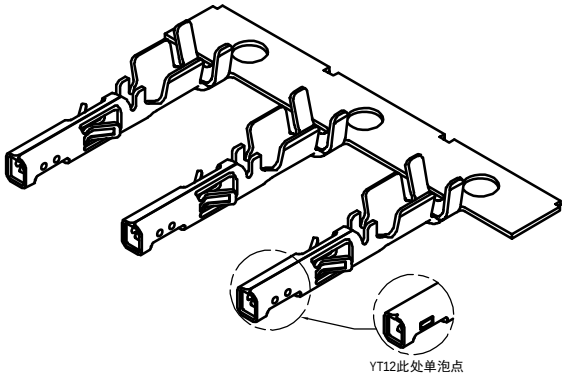

	Part No.		Material	Finish	Qty/reel
	C3001-TP	MX3.0-YT11	Phosphor Bronze	TIN	10000pcs
SUPERSEDED	~~C3001-T12P~~	~~MX3.0-YT12~~	~~Phosphor Bronze~~	~~TIN~~	~~10000pcs~~

主要技术参数
Main Specifications

线数(poles):2 to 12P/1×2 to 12×2P
额定电流(Current rating): 8.5A AC,DC
额定电压(Voltage rating): 250V AC,DC
温度范围(Temperature range): -25℃ to +105℃
接触电阻(Contact resistance): ≤15mΩ
绝缘电阻(Insulation resistance): ≥1000MΩ
耐电压(Withstand voltage):1500V AC/minute
适用线规(Applicable wire): AWG #30 to #20
绝缘外径(Insulation O.D): 1.2 to 1.9mm

未 注 公 差									
X.°±3° X.X°±0.5°				LHE® 浙江联和电子有限公司 ZHEJIANG LIANHE ELECTRONICS CO.,LTD					
>0-3	>3-18	>18-50	>50-120	单位	比例	Design Units	SIZE	页码	
±0.12	±0.15	±0.3	±0.5	MM Only	——	METRIC	A4		
制 作	审 核	批 准		材 料	图 号			Part No.	
				见图解	品 名	MX3.0-YT1*			

旧底图总号
底图总号
签 字
日 期

MX3.0连接器承认图面

REV	SYM	REVISION RECORD	DR.	APPR.	DATE
A/0		原 始 版 本			20180228
A/1		停产YT21,改为YT22			20180330
A/2	①	限高由1.57增加到1.75			20180419
A/3		取消端子表面处理说明			20220402
A/4		高低温环境测试从85℃,更新到105℃.更改电流	YF		20220929

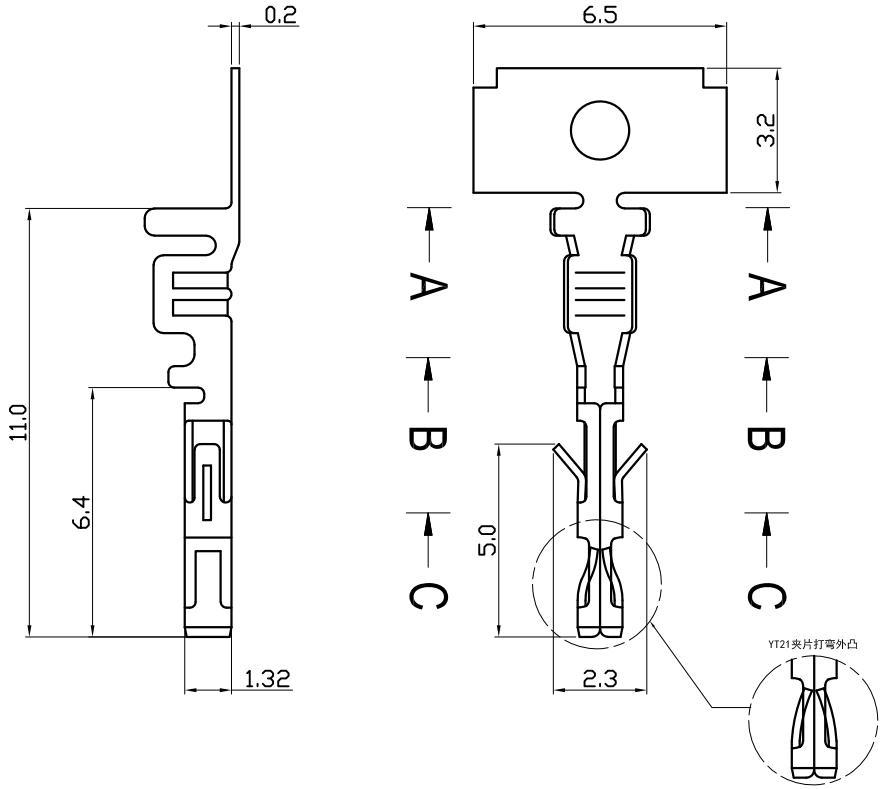

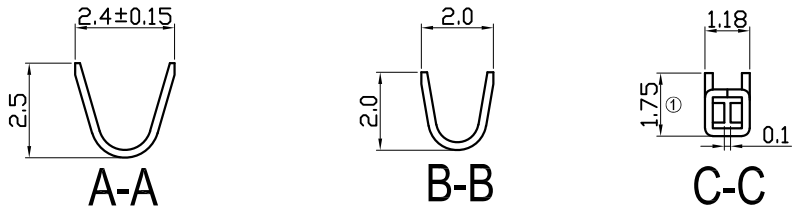

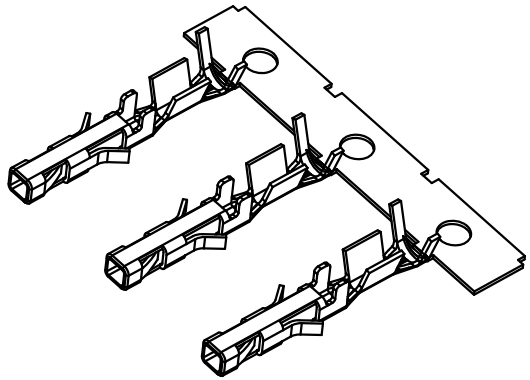

	Part No.		Material	Finish	Qty/reel
SUPERSEDED	~~C3001-T21P~~	~~MX3.0-YT21~~	~~Phosphor Bronze~~	~~TIN~~	~~10000pcs~~
	C3001-T22P	MX3.0-YT22	Phosphor Bronze	TIN	10000pcs

主要技术参数
Main Specifications

线数(poles):2 to 12P/1×2 to 12×2P
额定电流(Current rating): 8.5A AC,DC
额定电压(Voltage rating): 250V AC,DC
温度范围(Temperature range): -25℃ to +105℃
接触电阻(Contact resistance): ≤15mΩ
绝缘电阻(Insulation resistance): ≥1000MΩ
耐电压(Withstand voltage):1500V AC/minute
适用线规(Applicable wire): AWG #24 to #20
绝缘外径(Insulation O.D): 1.2 to 1.9mm

未注公差				LHE® 浙江联和电子有限公司 ZHEJIANG LIANHE ELECTRONICS CO.,LTD					
X.° ±3° X.X° ±0.5°									
>0-3	>3-18	>18-50	>50-120	单位	比例	Design Units	SIZE	页码	
±0.12	±0.15	±0.3	±0.5	MM Only	——	METRIC	A4		
制 作	审 核	批 准		材 料	图 号			Part No.	
				见图解	品 名	MX3.0-YT2*			

旧底图总号	
底图总号	
签 字	
日 期	

MX3.0连接器承认图面

REV	SYM	REVISION RECORD	DR.	APPR.	DATE
A/0		原 始 版 本			A/0
A/1		Part NO.由C3003改为C3002			20171022
A/2		MX3.0-NY改成MX3.0-1XNY			20190928
A/3		增加公差			20210716

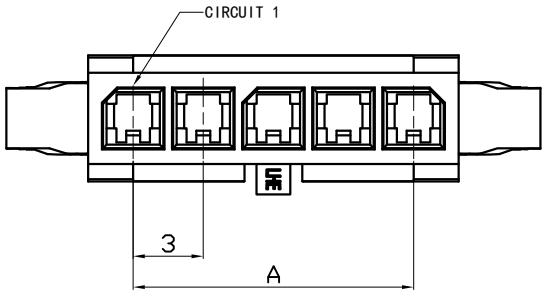

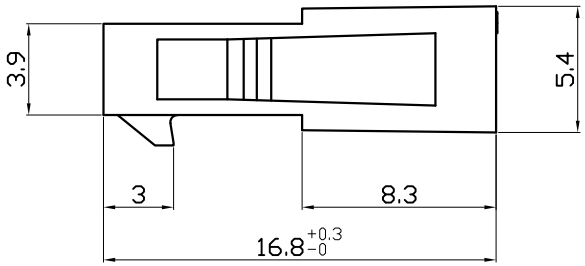

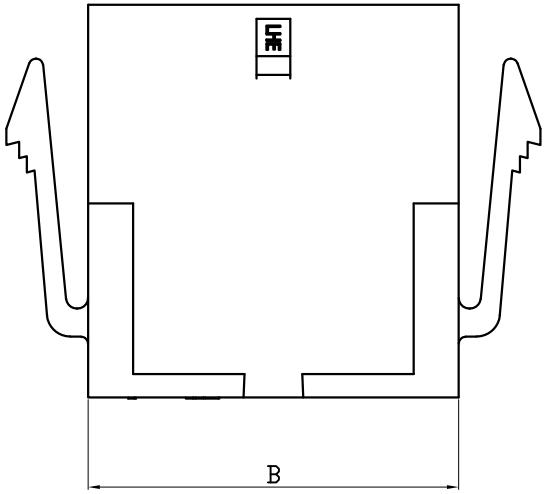

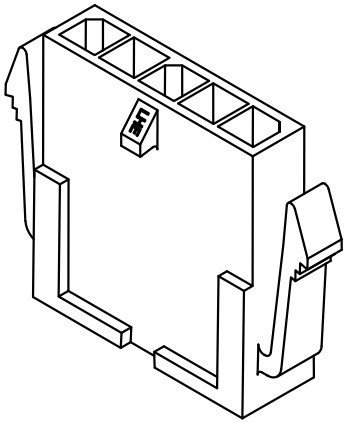

Poles	Part NO.		Dimensions mm A	Dimensions mm B
2	C3002-H02	MX3.0-2A	3.00	6.85
3	C3002-H03	MX3.0-3A	6.00	9.85
4	C3002-H04	MX3.0-4A	9.00	12.85
5	C3002-H05	MX3.0-5A	12.00	15.85
6	C3002-H06	MX3.0-6A	15.00	18.85
7	C3002-H07	MX3.0-7A	18.00	21.85
8	C3002-H08	MX3.0-8A	21.00	24.85
9	C3002-H09	MX3.0-9A	24.00	27.85
10	C3002-H10	MX3.0-10A	27.00	30.85
11	C3002-H11	MX3.0-11A	30.00	33.85
12	C3002-H12	MX3.0-12A	33.00	36.85

序号	图 号	名 称	材 料	数量	附 注
1		Housing	PA66(UL94V-0)	1	Black

未 注 公 差

X.° ±3° X.X° ±0.5°

LHE® 浙江联和电子有限公司
ZHEJIANG LIANHE ELECTRONICS CO.,LTD

>0-3	>3-18	>18-50	>50-120	单位	比例	Design Units	SIZE	页码
±0.12	±0.15	±0.3	±0.5	MM Only	——	METRIC	A4	

制 作	审 核	批 准	材 料	图 号		Part No.
			见图解	品 名	MX3.0-NA	

旧底图总号

底图总号

签 字

日 期

MX3.0连接器承认图面

REV	SYM	REVISION RECORD	DR.	APPR.	DATE
A/0		原 始 版 本			A/0
A/1		Part NO.由C3003改为C3002			20171022
A/2		MX3.0-NAF改成MX3.0-1XNAF			20190928
A/3		增加公差			20210716

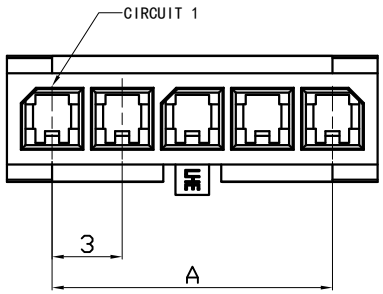

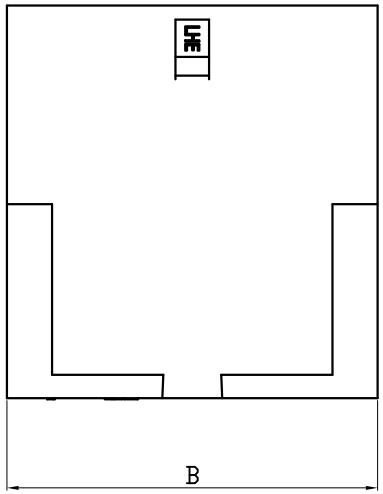

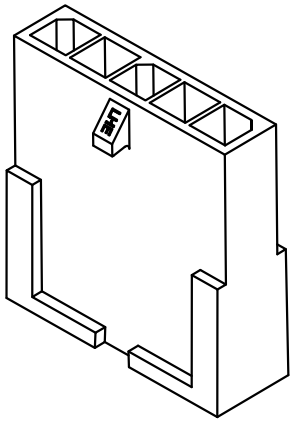

Poles	Part NO.		Dimensions mm A	Dimensions mm B
2	C3002-HB02	MX3.0-2AF	3.00	6.85
3	C3002-HB03	MX3.0-3AF	6.00	9.85
4	C3002-HB04	MX3.0-4AF	9.00	12.85
5	C3002-HB05	MX3.0-5AF	12.00	15.85
6	C3002-HB06	MX3.0-6AF	15.00	18.85
7	C3002-HB07	MX3.0-7AF	18.00	21.85
8	C3002-HB08	MX3.0-8AF	21.00	24.85
9	C3002-HB09	MX3.0-9AF	24.00	27.85
10	C3002-HB10	MX3.0-10AF	27.00	30.85
11	C3002-HB11	MX3.0-11AF	30.00	33.85
12	C3002-HB12	MX3.0-12AF	33.00	36.85

序号	图 号	名 称	材 料	数量	附 注
1		Housing	PA66(UL94V-0)	1	Black

未 注 公 差

X.° ±3° X.X° ±0.5°

>0-3	>3-18	>18-50	>50-120
±0.12	±0.15	±0.3	±0.5

LHE® 浙江联和电子有限公司
ZHEJIANG LIANHE ELECTRONICS CO.,LTD

单位	比例	Design Units	SIZE	页码
MM Only	——	METRIC	A4	

制 作	审 核	批 准	材 料	图 号	Part No.
			见图解	品 名	MX3.0-NAF

旧底图总号

底图总号

签 字

日 期

MX3.0连接器承认图面

REV	SYM	REVISION RECORD	DR.	APPR.	DATE
A/0		原始版本			A/0

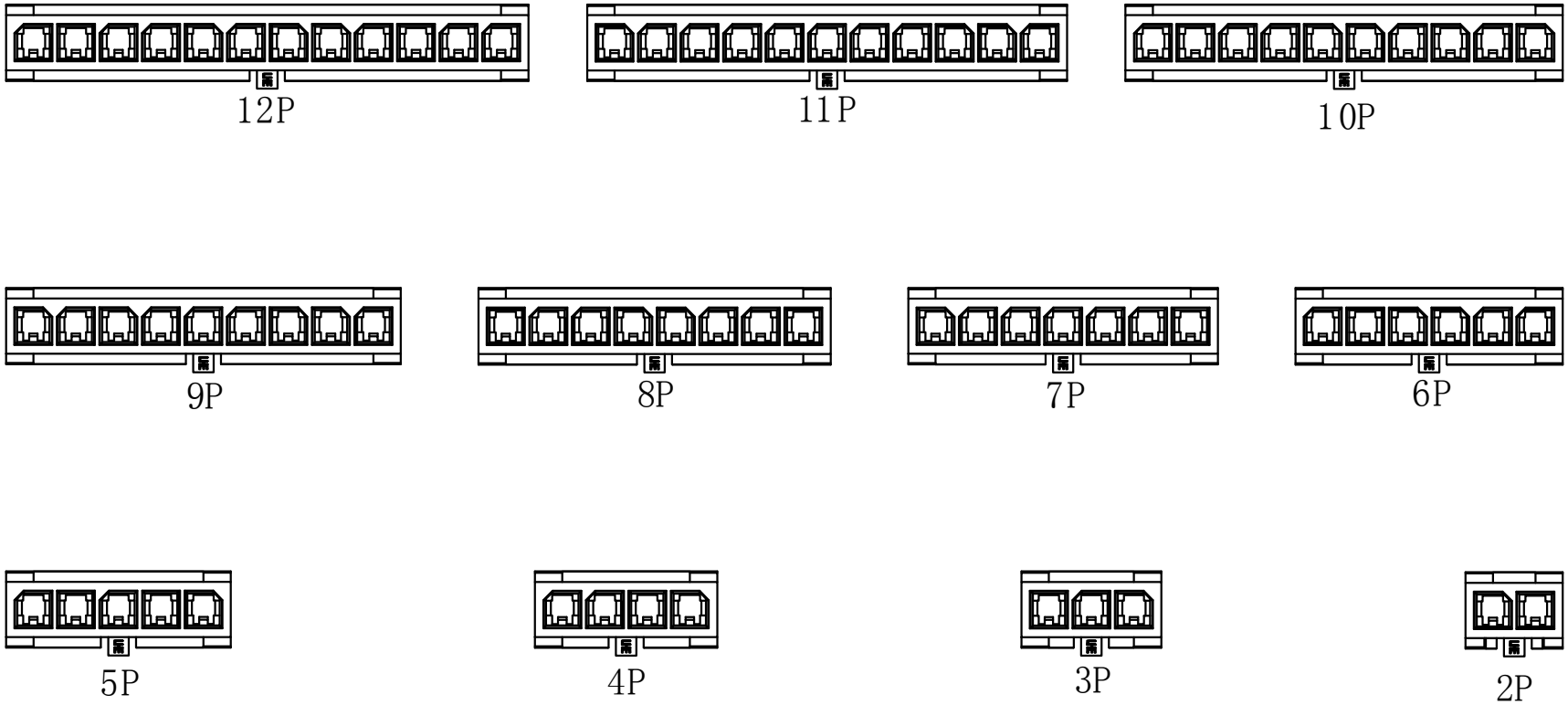

未注公差				LHE® 浙江联和电子有限公司 ZHEJIANG LIANHE ELECTRONICS CO.,LTD				
X.° ±3° X.X° ±0.5°								
>0-3	>3-18	>18-50	>50-120	单位	比例	Design Units	SIZE	页码
±0.12	±0.15	±0.3	±0.5	MM Only	——	METRIC	A4	
制作	审核	批准		材料	图号			Part No.
				见图解	品名	MX3.0-NA/AF端口图示		

旧底图总号

底图总号

签字

日期

MX3.0连接器承认图面

REV	SYM	REVISION RECORD	DR.	APPR.	DATE
A/0		原 始 版 本			A/0
A/1		Part NO.由C3003改为C3002			20171022
A/3		增加公差			20210716

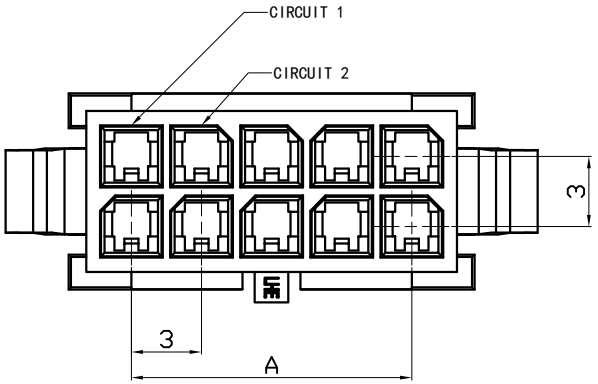

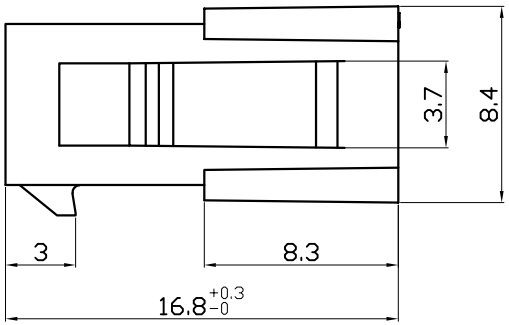

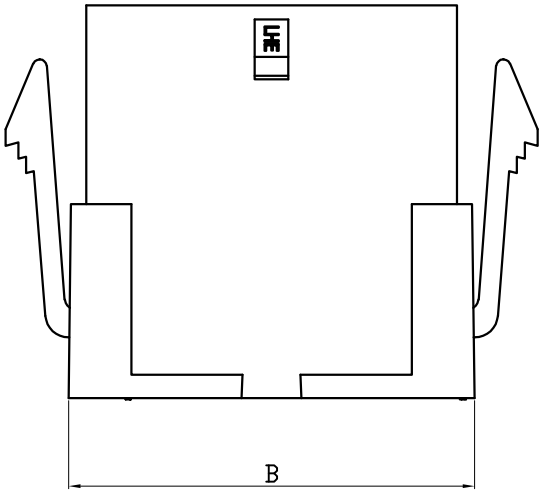

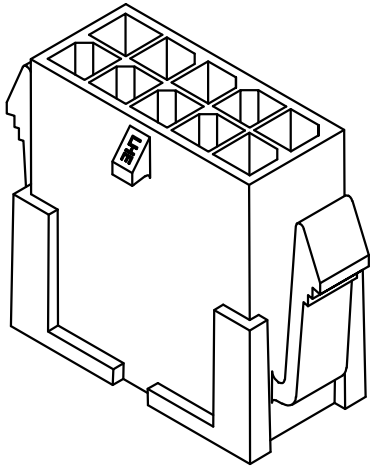

Poles	Part NO.		Dimensions mm A	Dimensions mm B
2	C3002-H01X2	MX3.0-2X1A	--	5.35
4	C3002-H02X2	MX3.0-2X2A	3.00	8.35
6	C3002-H03X2	MX3.0-2X3A	6.00	11.35
8	C3002-H04X2	MX3.0-2X4A	9.00	14.35
10	C3002-H05X2	MX3.0-2X5A	12.00	17.35
12	C3002-H06X2	MX3.0-2X6A	15.00	20.35
14	C3002-H07X2	MX3.0-2X7A	18.00	23.35
16	C3002-H08X2	MX3.0-2X8A	21.00	26.35
18	C3002-H09X2	MX3.0-2X9A	24.00	29.35
20	C3002-H10X2	MX3.0-2X10A	27.00	32.35
22	C3002-H11X2	MX3.0-2X11A	30.00	35.35
24	C3002-H12X2	MX3.0-2X12A	33.00	38.35

序号	图 号	名 称	材 料	数量	附 注
1		Housing	PA66(UL94V-0)	1	Black

未 注 公 差

X.° ±3° X.X° ±0.5°

LHE® 浙江联和电子有限公司
ZHEJIANG LIANHE ELECTRONICS CO.,LTD

>0-3	>3-18	>18-50	>50-120	单位	比例	Design Units	SIZE	页码
±0.12	±0.15	±0.3	±0.5	MM Only	——	METRIC	A4	

制 作	审 核	批 准	材 料	图 号		Part No.
			见图解	品 名	MX3.0-2XNA	

旧底图总号

底图总号

签 字

日 期

MX3.0连接器承认图面

REV	SYM	REVISION RECORD	DR.	APPR.	DATE
A/0		原 始 版 本			A/0
A/1		Part NO.由C3003改为C3002			20171022
A/3		增加公差			20210716

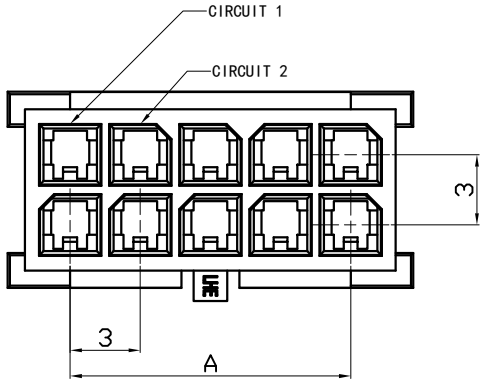

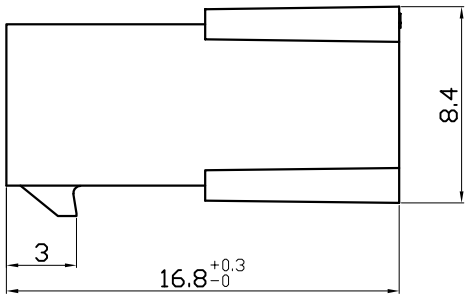

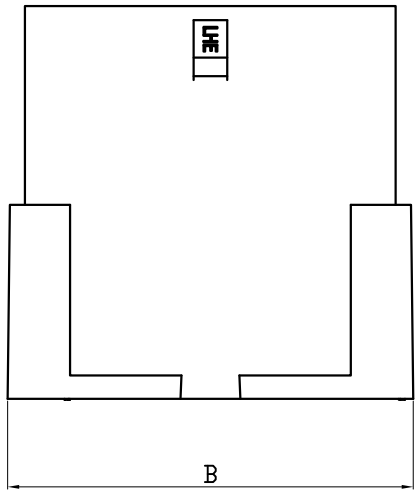

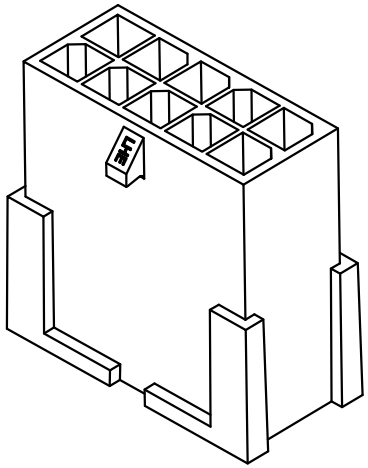

Poles	Part NO.		Dimensions mm A	Dimensions mm B
2	C3002-HB01X2	MX3.0-2X1AF	--	5.35
4	C3002-HB02X2	MX3.0-2X2AF	3.00	8.35
6	C3002-HB03X2	MX3.0-2X3AF	6.00	11.35
8	C3002-HB04X2	MX3.0-2X4AF	9.00	14.35
10	C3002-HB05X2	MX3.0-2X5AF	12.00	17.35
12	C3002-HB06X2	MX3.0-2X6AF	15.00	20.35
14	C3002-HB07X2	MX3.0-2X7AF	18.00	23.35
16	C3002-HB08X2	MX3.0-2X8AF	21.00	26.35
18	C3002-HB09X2	MX3.0-2X9AF	24.00	29.35
20	C3002-HB10X2	MX3.0-2X10AF	27.00	32.35
22	C3002-HB11X2	MX3.0-2X11AF	30.00	35.35
24	C3002-HB12X2	MX3.0-2X12AF	33.00	38.35

序号	图 号	名 称	材 料	数量	附 注
1		Housing	PA66(UL94V-0)	1	Black

未 注 公 差

X.° ±3° X.X° ±0.5°

LHE® 浙江联和电子有限公司
ZHEJIANG LIANHE ELECTRONICS CO.,LTD

>0-3	>3-18	>18-50	>50-120	单位	比例	Design Units	SIZE	页码
±0.12	±0.15	±0.3	±0.5	MM Only	——	METRIC	A4	

制 作	审 核	批 准	材 料	图 号		Part No.
			见图解	品 名	MX3.0-2×NAF	

旧底图总号

底图总号

签 字

日 期

MX3.0连接器承认图面

REV	SYM	REVISION RECORD	DR.	APPR.	DATE
A/0		原 始 版 本			A/0

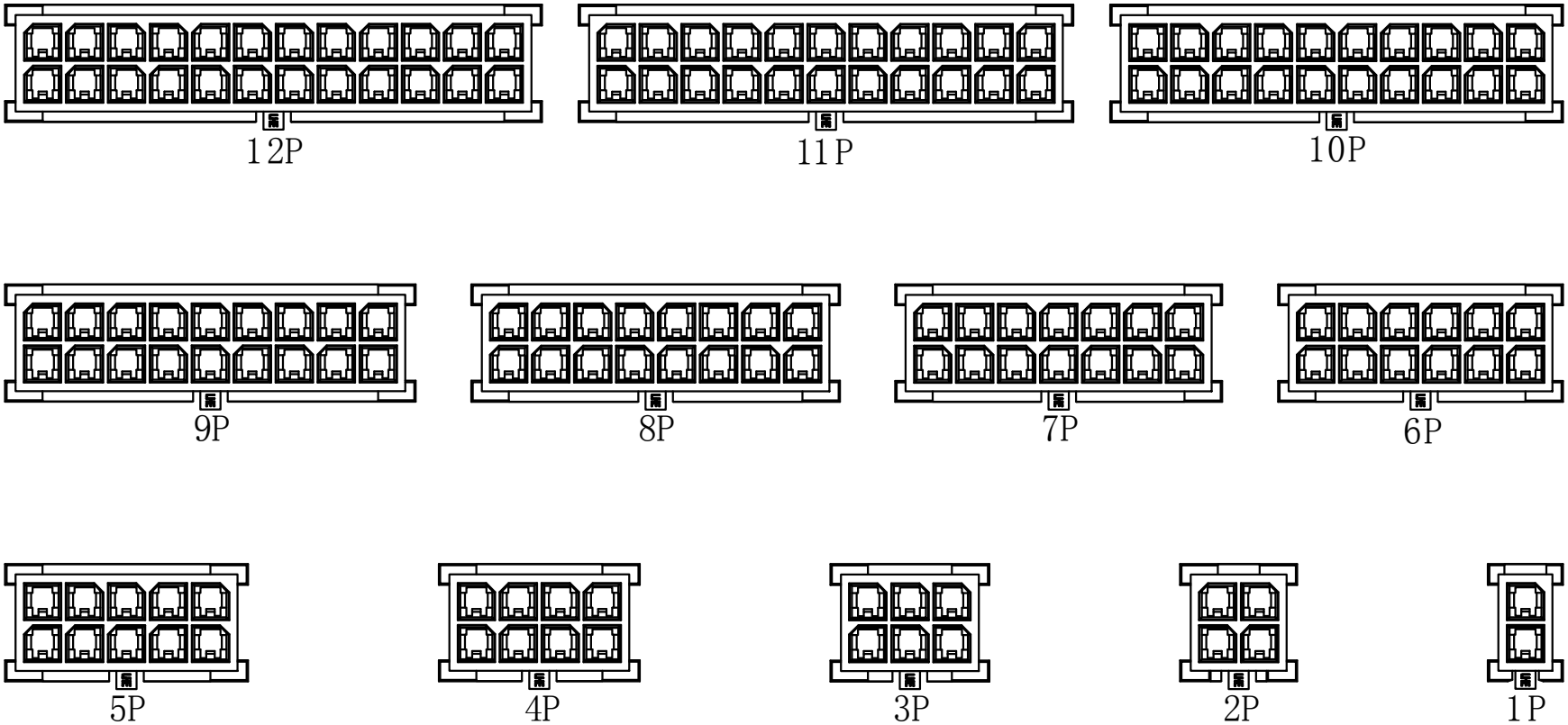

未 注 公 差				LHE® 浙江联和电子有限公司 ZHEJIANG LIANHE ELECTRONICS CO.,LTD					
X.° ±3° X.X° ±0.5°									
>0-3	>3-18	>18-50	>50-120	单位	比例	Design Units	SIZE	页码	
±0.12	±0.15	±0.3	±0.5	MM Only	——	METRIC	A4		
制 作	审 核	批 准		材 料	图 号			Part No.	
				见图解	品 名	MX3.0-2XNA/AF端口图示			

旧底图总号
底图总号
签 字
日 期

MX3.0型连接器承认图面

REV	SYM	REVISION RECORD	DR.	APPR.	DATE
A/0		原 始 版 本			A/0
A/1		由C3003T改为C3002-T			20171022
A/2		取消端子表面处理说明			20220402
A/3		高低温环境测试从85℃,更新到105℃.更改电流	YF		20220929

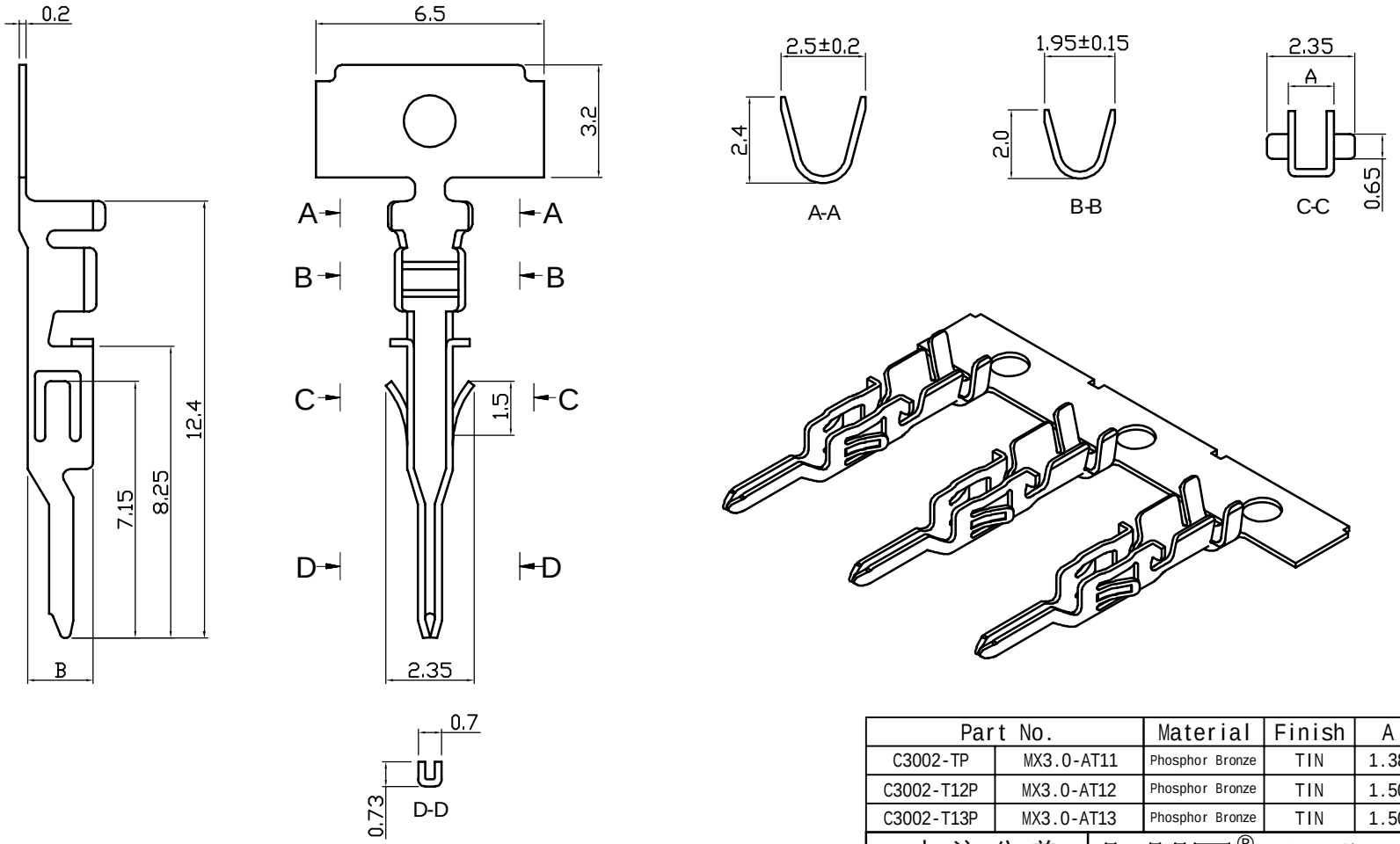

Part No.		Material	Finish	A	B	Qty/reel
C3002-TP	MX3.0-AT11	Phosphor Bronze	TIN	1.38	1.9	10000pcs
C3002-T12P	MX3.0-AT12	Phosphor Bronze	TIN	1.50	1.9	10000pcs
C3002-T13P	MX3.0-AT13	Phosphor Bronze	TIN	1.50	2.0	10000pcs

主要技术参数
Main Specifications

线数(poles):2 to 12P/1×2 to 12×2P
额定电流(Current rating): 8.5A AC,DC
额定电压(Voltage rating): 250V AC,DC
温度范围(Temperature range): -25℃ to +105℃
接触电阻(Contact resistance): ≤15mΩ
绝缘电阻(Insulation resistance): ≥1000MΩ
耐电压(Withstand voltage):1500V AC/minute
适用线规(Applicable wire): AWG #30 to #20
绝缘外径(Insulation O.D): 1.2 to 1.9mm

未注公差				浙江联和电子有限公司 ZHEJIANG LIANHE ELECTRONICS CO.,LTD					
X.°±3° X.X°±0.5°									
>0-3	>3-18	>18-50	>50-120	单位	比例	Design Units	SIZE	页码	
±0.12	±0.15	±0.3	±0.5	MM Only	——	METRIC	A4		
制 作	审 核	批 准		材 料	图 号			Part No.	
				见图解	品 名	MX3.0-AT			

旧底图总号	
底图总号	
签 字	
日 期	

MX3.0连接器承认图面

REV	DESCRIPTION	DATE
A/0	原始版本	E
A/1	修订版本	

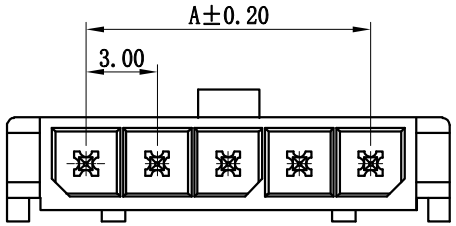

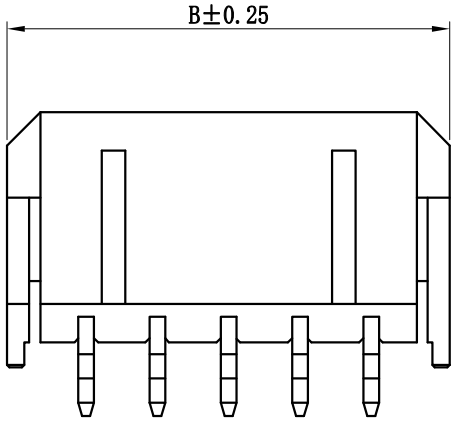

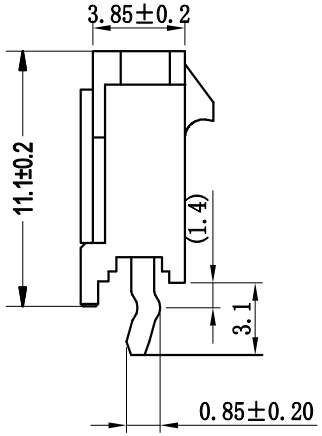

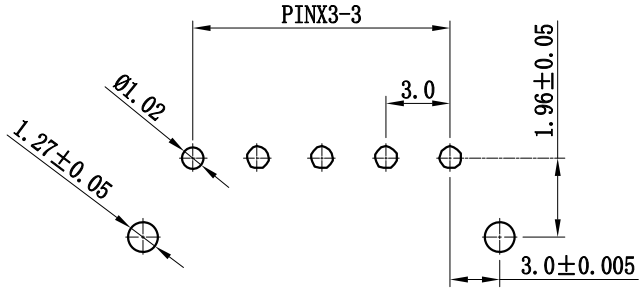

P.C.B LAYOUT

Poles	Part NO.		Dimensions mm A	Dimensions mm B
2	A3001-DWV02-K	MX3.0-2AD打点	3.00	9.65
3	A3001-DWV03-K	MX3.0-3AD打点	6.00	12.65
4	A3001-DWV04-K	MX3.0-4AD打点	9.00	15.65
5	A3001-DWV05-K	MX3.0-5AD打点	12.00	18.65
6	A3001-DWV06-K	MX3.0-6AD打点	15.00	21.65
7	A3001-DWV07-K	MX3.0-7AD打点	18.00	24.65
8	A3001-DWV08-K	MX3.0-8AD打点	21.00	27.65
9	A3001-DWV09-K	MX3.0-9AD打点	24.00	30.65
10	A3001-DWV10-K	MX3.0-10AD打点	27.00	33.65
11	A3001-DWV11-K	MX3.0-11AD打点	30.00	36.65
12	A3001-DWV12-K	MX3.0-12AD打点	33.00	39.65

序号	图号	名称	材料	数量	附注
2		Contact	Brass Tin	N	
1		Housing	PA9T(UL94V-0)	1	Black

未注公差			
X.° ±3°	X.X° ±0.5°		
>0-3	>3-18	>18-50	>50-120
±0.12	±0.15	±0.3	±0.5

LHE® 浙江联和电子有限公司
ZHEJIANG LIANHE ELECTRONICS CO.,LTD

单位	比例	Design Units	SIZE	页码
MM Only	——	METRIC	A4	

制作	审核	批准	材料	图号		Part No
			见图解	品名	MX3.0-NAD打点-70	

旧底图总号
底图总号
签字
日期

MX3.0连接器承认图面

REV	DESCRIPTION	DATE
A/0	原始版本	E
A/1	修订版本	

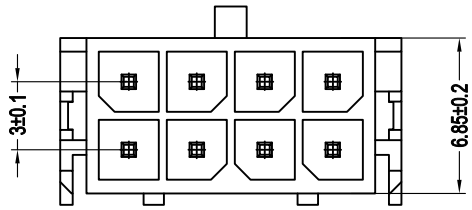

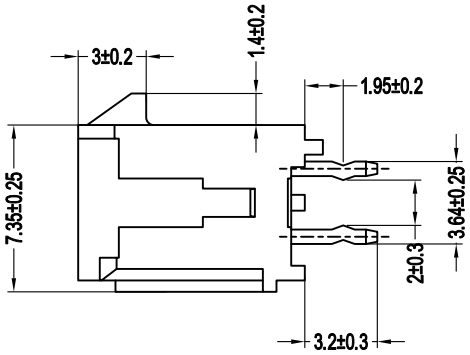

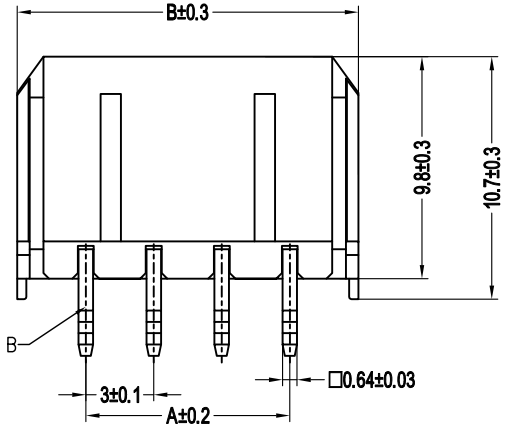

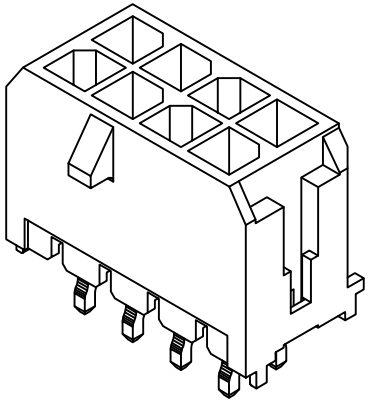

Poles	Part NO.		Dimensions mm	
			A	B
6	A3001-DWVB03X2-K	MX3.0-2X3ADB打点	6.00	12.05
8	A3001-DWVB04X2-K	MX3.0-2X4ADB打点	9.00	15.05

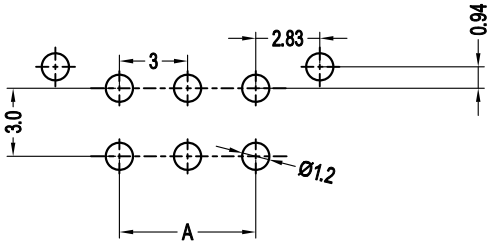

P.C.B LAYOUT

序号	图号	名称	材料	数量	附注
2		Contact	Brass	N	
1		Housing	PA9T(UL94V-0)	1	Black

未注公差

X.±5°.X±2°.XX±1°

LHE® 浙江联和电子有限公司
ZHEJIANG LIANHE ELECTRONICS CO.,LTD

X.	.X	.XX	单位	比例	Design Units	SIZE	页码
±0.5	±0.3	±0.25	MM Only	——	METRIC	A4	
制作	审核	批准	材料	图号			Part No
			见图解	品名	MX3.0-2XNADB打点-(79)		

旧底图总号

底图总号

签字

日期

MX3.0连接器承认图面

REV	DESCRIPTION	DATE
A/0	原始版本	E
A/1	修订版本	

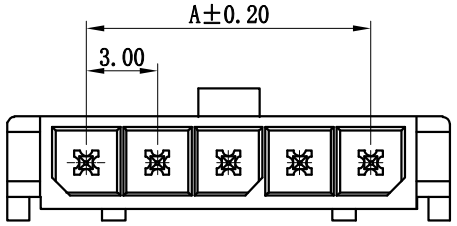

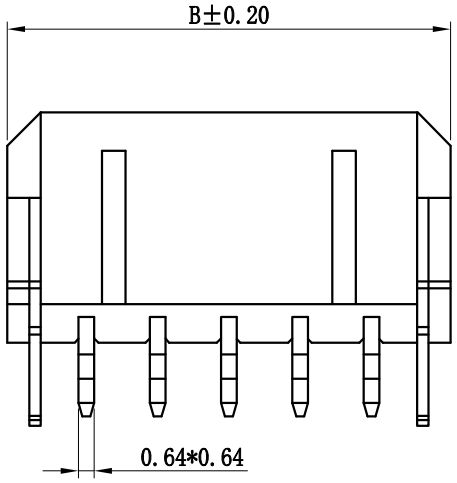

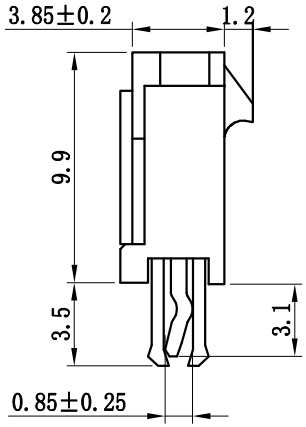

Poles	Part NO.		Dimensions mm	
			A	B
2	A3001-WVC02-K	MX3.0-2AC打点	3.00	9.65
3	A3001-WVC03-K	MX3.0-3AC打点	6.00	12.65
4	A3001-WVC04-K	MX3.0-4AC打点	9.00	15.65
5	A3001-WVC05-K	MX3.0-5AC打点	12.00	18.65
6	A3001-WVC06-K	MX3.0-6AC打点	15.00	21.65
7	A3001-WVC07-K	MX3.0-7AC打点	18.00	24.65
8	A3001-WVC08-K	MX3.0-8AC打点	21.00	27.65
9	A3001-WVC09-K	MX3.0-9AC打点	24.00	30.65
10	A3001-WVC10-K	MX3.0-10AC打点	27.00	33.65
11	A3001-WVC11-K	MX3.0-11AC打点	30.00	36.65
12	A3001-WVC12-K	MX3.0-12AC打点	33.00	39.65

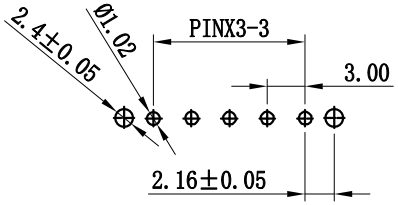

P.C.B LAYOUT

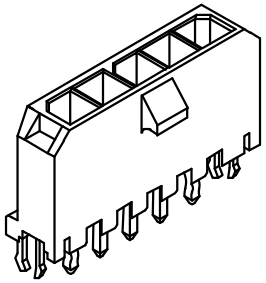

序号	图号	名称	材料	数量	附注
3		Press-fit	Brass Tin	2	
2		Contact	Brass Tin	N	
1		Housing	PA9T(UL94V-0)	1	Black

未注公差

X.° ±3° X.X° ±0.5°

>0-3	>3-18	>18-50	>50-120
±0.12	±0.15	±0.3	±0.5

LHE® 浙江联和电子有限公司
ZHEJIANG LIANHE ELECTRONICS CO.,LTD

单位	比例	Design Units	SIZE	页码
MM Only	——	METRIC	A4	

制作	审核	批准	材料	图号		Part No
			见图解	品名	MX3.0-NAC打点-70	

旧底图总号

底图总号

签字

日期

MX3.0连接器承认图面

REV	DESCRIPTION	DATE
A/0	原始版本	E
A/1	修订版本	

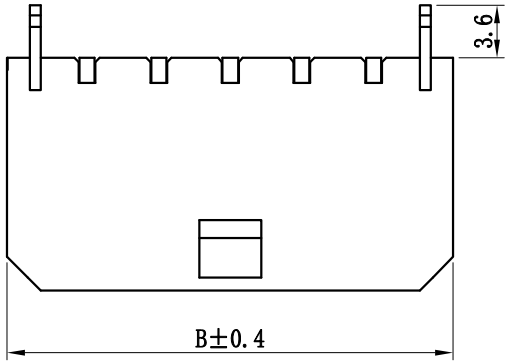

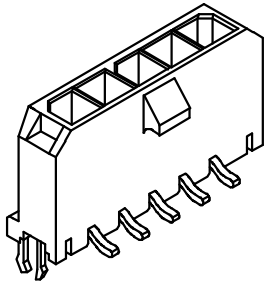

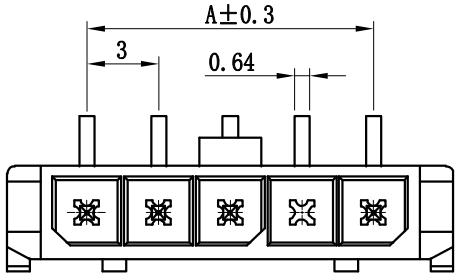

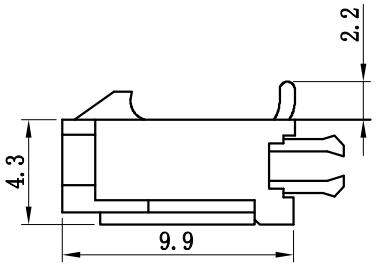

Poles	Part NO.		Dimensions mm	
			A	B
2	A3001-SVC02	MX3.0-2ABC	3.00	9.7
3	A3001-SVC03	MX3.0-3ABC	6.00	12.7
4	A3001-SVC04	MX3.0-4ABC	9.00	15.7
5	A3001-SVC05	MX3.0-5ABC	12.00	18.7
6	A3001-SVC06	MX3.0-6ABC	15.00	21.7
7	A3001-SVC07	MX3.0-7ABC	18.00	24.7
8	A3001-SVC08	MX3.0-8ABC	21.00	27.7
9	A3001-SVC09	MX3.0-9ABC	24.00	30.7
10	A3001-SVC10	MX3.0-10ABC	27.00	33.7
11	A3001-SVC11	MX3.0-11ABC	30.00	36.7
12	A3001-SVC12	MX3.0-12ABC	33.00	39.7

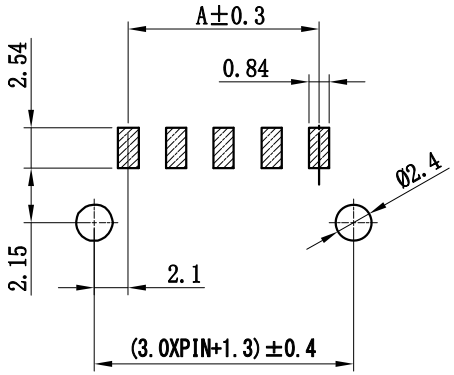

P.C.B LAYOUT

序号	图号	名称	材料	数量	附注
3		Press-fit	Brass Tin	2	
2		Contact	Brass Tin	N	
1		Housing	LCP(UL94V-0)	1	Black

未注公差

X.° ±3° X.X° ±0.5°

>0-3	>3-18	>18-50	>50-120
±0.12	±0.15	±0.3	±0.5

LHE® 浙江联和电子有限公司
ZHEJIANG LIANHE ELECTRONICS CO.,LTD

单位	比例	Design Units	SIZE	页码
MM Only	——	METRIC	A4	

制作	审核	批准	材料	图号		Part No
			见图解	品名	MX3.0-NABC-70	

旧底图总号

底图总号

签字

日期

MX3.0连接器承认图面

REV	SYM	REVISION RECORD	DR.	APPR.	DATE
A/0		原 始 版 本			A/0
A/1					

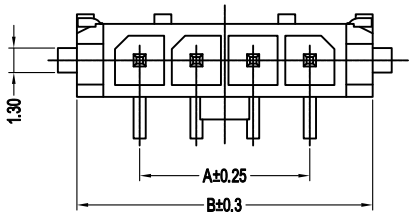

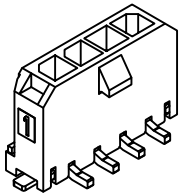

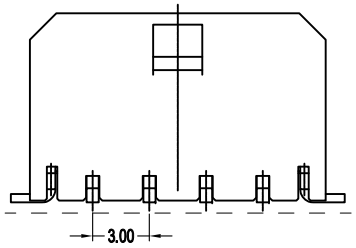

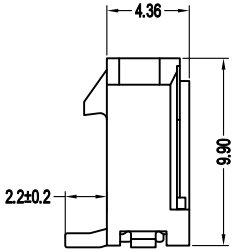

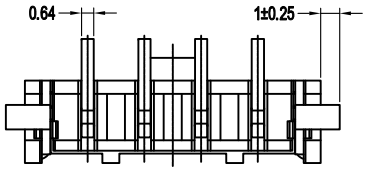

SHOWN WITH CAP
SCALE:2/1

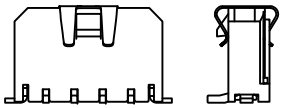

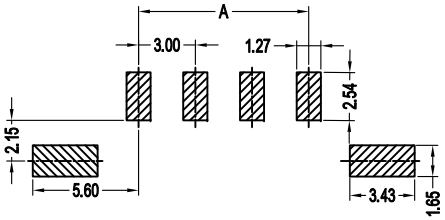

PCB LAYOUT(Tolerance:±0.05)

SCALE:2/1

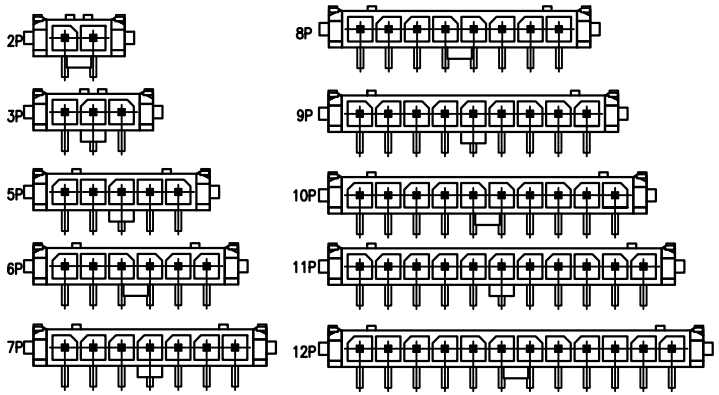

Poles	Part NO.		Dimensions mm A	Dimensions mm B
2	A3001-SV02	MX3.0-2AB	3.00	9.65
3	A3001-SV03	MX3.0-3AB	6.00	12.65
4	A3001-SV04	MX3.0-4AB	9.00	15.65
5	A3001-SV05	MX3.0-5AB	12.00	18.65
6	A3001-SV06	MX3.0-6AB	15.00	21.65
7	A3001-SV07	MX3.0-7AB	18.00	24.65
8	A3001-SV08	MX3.0-8AB	21.00	27.65
9	A3001-SV09	MX3.0-9AB	24.00	30.65
10	A3001-SV10	MX3.0-10AB	27.00	33.65
11	A3001-SV11	MX3.0-11AB	30.00	36.65
12	A3001-SV12	MX3.0-12AB	33.00	39.65

序号	图号	名称	材料	数量	附注
3		Solder nall	Brass Tin	2	
2		Contact	Brass Tin	N	
1		Housing	LCP(UL94V-0)	1	Black

未注公差								
X.° ±5° X.X° ±2°								
X.	X.X	X.XX	单位	比例	Design Units	SIZE	页码	
±0.5	±0.3	±0.2	MM Only	——	METRIC	A4		
制作	审核	批准	材料	图号			Part No	
			见图解	品名	MX3.0-NAB(79)			

LHE® 浙江联和电子有限公司
ZHEJIANG LIANHE ELECTRONICS CO.,LTD

旧底图总号
底图总号
签字
日期

MX3.0连接器承认图面

REV	DESCRIPTION	DATE
A/0	原始版本	E
A/1	修订版本	

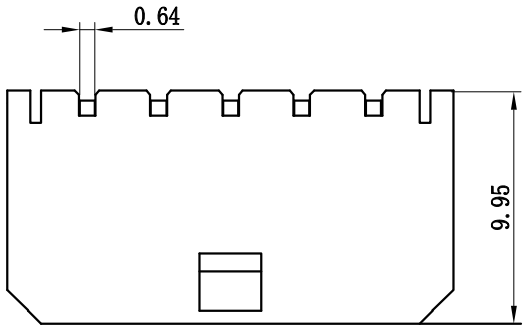

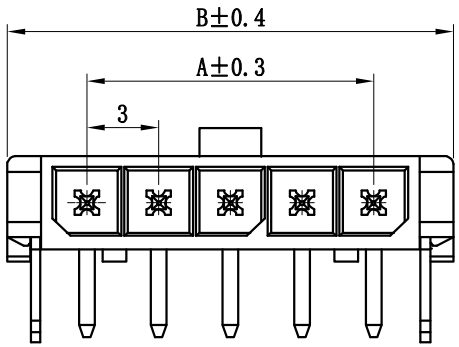

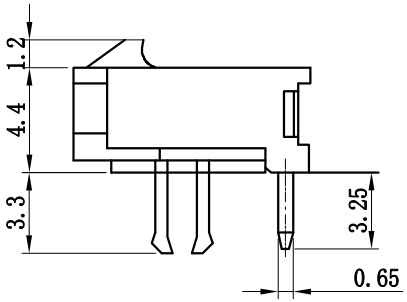

Poles	Part NO.		Dimensions mm	
			A	B
2	A3001-WRC02	MX3.0-2AWC	3.00	9.65
3	A3001-WRC03	MX3.0-3AWC	6.00	12.65
4	A3001-WRC04	MX3.0-4AWC	9.00	15.65
5	A3001-WRC05	MX3.0-5AWC	12.00	18.65
6	A3001-WRC06	MX3.0-6AWC	15.00	21.65
7	A3001-WRC07	MX3.0-7AWC	18.00	24.65
8	A3001-WRC08	MX3.0-8AWC	21.00	27.65
9	A3001-WRC09	MX3.0-9AWC	24.00	30.65
10	A3001-WRC10	MX3.0-10AWC	27.00	33.65
11	A3001-WRC11	MX3.0-11AWC	30.00	36.65
12	A3001-WRC12	MX3.0-12AWC	33.00	39.65

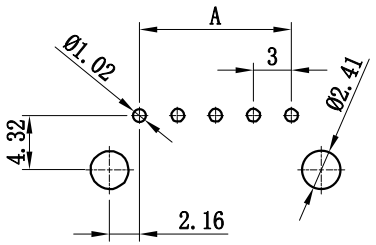

P.C.B LAYOUT

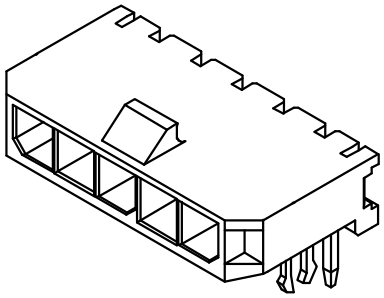

序号	图号	名称	材料	数量	附注
3		Press-fit	Brass Tin	2	
2		Contact	Brass Tin	N	
1		Housing	PA9T(UL94V-0)	1	Black

未注公差

X.° ±3° X.X° ±0.5°

>0-3	>3-18	>18-50	>50-120
±0.12	±0.15	±0.3	±0.5

LHE® 浙江联和电子有限公司
ZHEJIANG LIANHE ELECTRONICS CO.,LTD

单位	比例	Design Units	SIZE	页码
MM Only	——	METRIC	A4	

制作	审核	批准	材料	图号		Part No
			见图解	品名	MX3.0-NAWC-70	

旧底图总号

底图总号

签字

日期

MX3.0连接器承认图面

REV	DESCRIPTION	DATE
A/0	原始版本	E
A/1	修订版本	

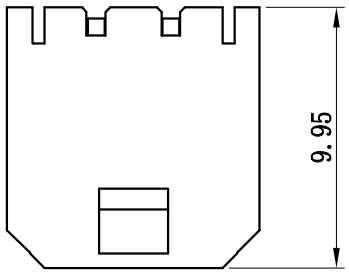

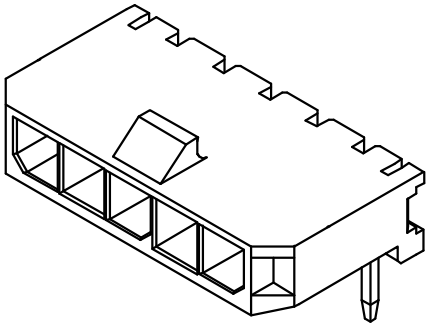

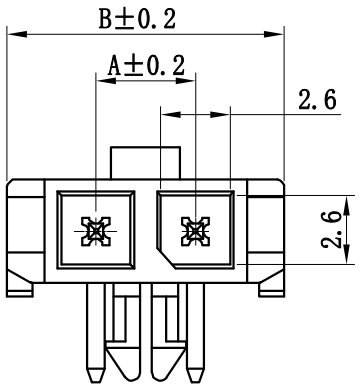

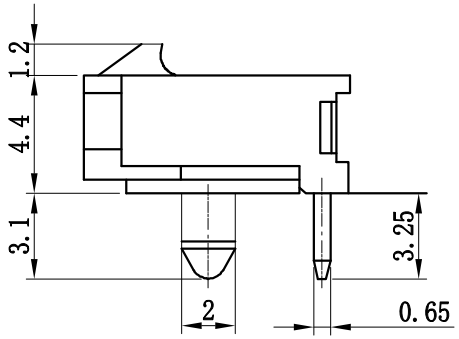

Poles	Part NO.		Dimensions mm	
			A	B
2	A3001-WRB02	MX3.0-2AWD	3.00	9.65
3	A3001-WRB03	MX3.0-3AWD	6.00	12.65
4	A3001-WRB04	MX3.0-4AWD	9.00	15.65
5	A3001-WRB05	MX3.0-5AWD	12.00	18.65
6	A3001-WRB06	MX3.0-6AWD	15.00	21.65
7	A3001-WRB07	MX3.0-7AWD	18.00	24.65
8	A3001-WRB08	MX3.0-8AWD	21.00	27.65
9	A3001-WRB09	MX3.0-9AWD	24.00	30.65
10	A3001-WRB10	MX3.0-10AWD	27.00	33.65
11	A3001-WRB11	MX3.0-11AWD	30.00	36.65
12	A3001-WRB12	MX3.0-12AWD	33.00	39.65

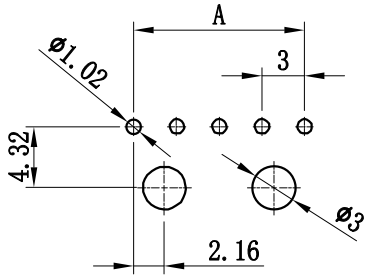

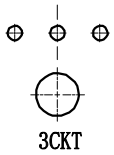

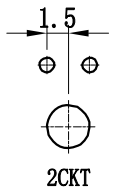

P.C.B LAYOUT

序号	图号	名称	材料	数量	附注
2		Contact	Brass Tin	N	
1		Housing	PA9T(UL94V-0)	1	Black

未注公差

X.° ±3° X.X° ±0.5°

>0-3	>3-18	>18-50	>50-120
±0.12	±0.15	±0.3	±0.5

LHE® 浙江联和电子有限公司
ZHEJIANG LIANHE ELECTRONICS CO.,LTD

单位	比例	Design Units	SIZE	页码
MM Only	——	METRIC	A4	

制作	审核	批准	材料	图号		Part No
			见图解	品名	MX3.0-NAWD-70	

旧底图总号

底图总号

签字

日期

MX3.0连接器承认图面

REV	DESCRIPTION	DATE
A/0	原始版本	E
A/1	修订版本	

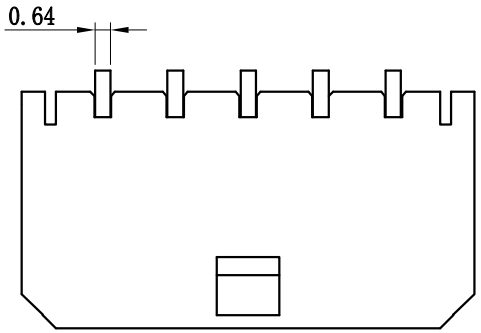

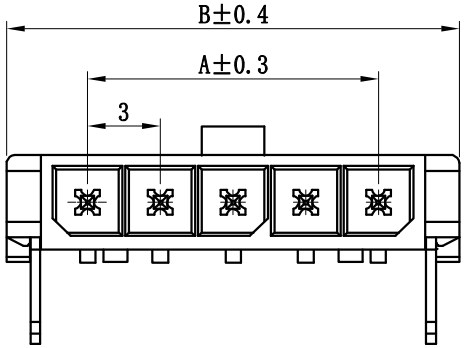

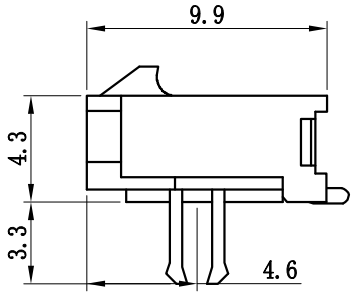

Poles	Part NO.		Dimensions mm	
			A	B
2	A3001-SRC02	MX3.0-2AWBC	3.00	9.7
3	A3001-SRC03	MX3.0-3AWBC	6.00	12.7
4	A3001-SRC04	MX3.0-4AWBC	9.00	15.7
5	A3001-SRC05	MX3.0-5AWBC	12.00	18.7
6	A3001-SRC06	MX3.0-6AWBC	15.00	21.7
7	A3001-SRC07	MX3.0-7AWBC	18.00	24.7
8	A3001-SRC08	MX3.0-8AWBC	21.00	27.7
9	A3001-SRC09	MX3.0-9AWBC	24.00	30.7
10	A3001-SRC10	MX3.0-10AWBC	27.00	33.7
11	A3001-SRC11	MX3.0-11AWBC	30.00	36.7
12	A3001-SRC12	MX3.0-12AWBC	33.00	39.7

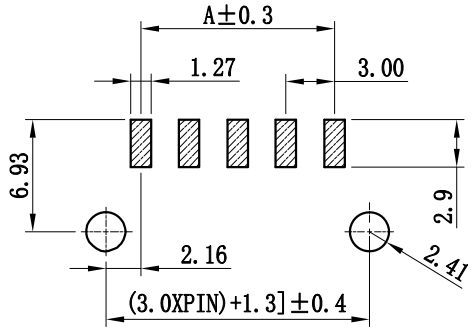

P.C.B LAYOUT

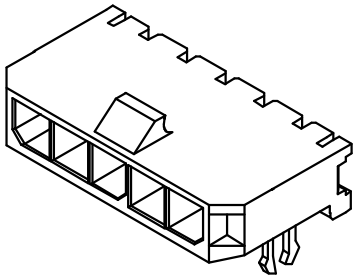

序号	图号	名称	材料	数量	附注
3		Press-fit	Brass Tin	2	
2		Contact	Brass Tin	N	
1		Housing	LCP(UL94V-0)	1	Black

未注公差

X.° ±3° X.X° ±0.5°

>0-3	>3-18	>18-50	>50-120
±0.12	±0.15	±0.3	±0.5

LHE® 浙江联和电子有限公司
ZHEJIANG LIANHE ELECTRONICS CO.,LTD

单位	比例	Design Units	SIZE	页码
MM Only	——	METRIC	A4	

制作	审核	批准	材料	图号		Part No
			见图解	品名	MX3.0-NAWBC-70	

旧底图总号

底图总号

签字

日期

MX3.0连接器承认图面

REV	DESCRIPTION	DATE
A/0	原 始 版 本	E
A/1	修 订 版 本	

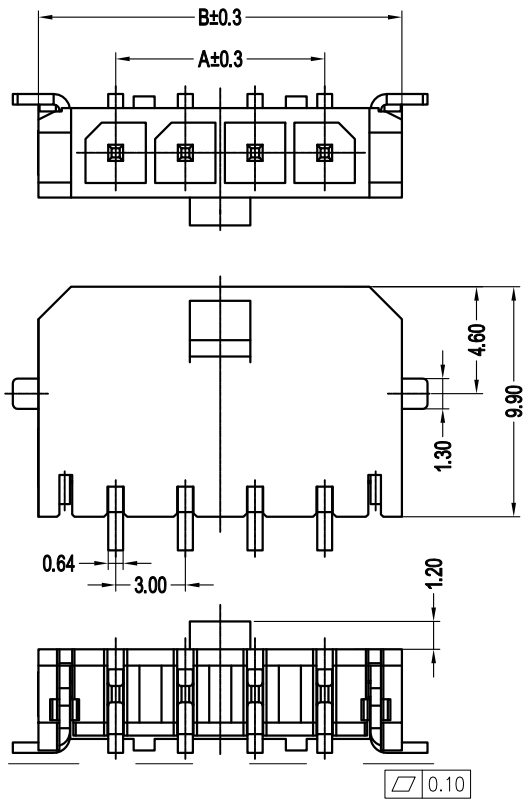

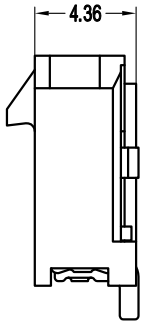

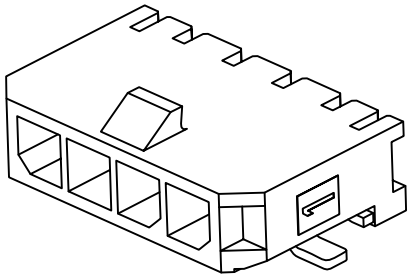

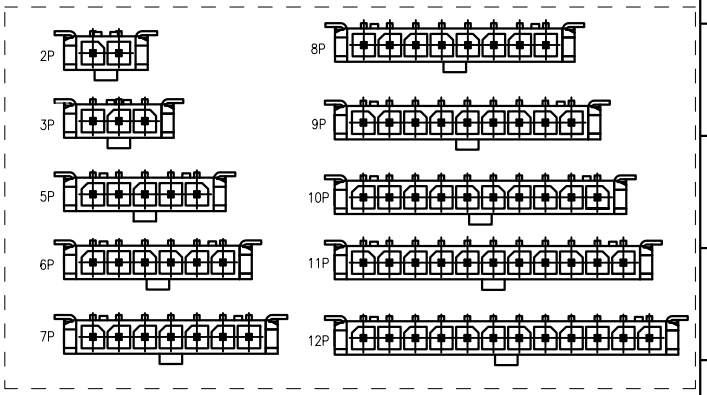

Poles	Part NO.		Dimensions mm A	Dimensions mm B
2	A3001-SR02	MX3.0-2AWB	3.00	9.7
3	A3001-SR03	MX3.0-3AWB	6.00	12.7
4	A3001-SR04	MX3.0-4AWB	9.00	15.70
5	A3001-SR05	MX3.0-5AWB	12.00	18.70
6	A3001-SR06	MX3.0-6AWB	15.00	21.70
7	A3001-SR07	MX3.0-7AWB	18.00	24.70
8	A3001-SR08	MX3.0-8AWB	21.00	27.70
9	A3001-SR09	MX3.0-9AWB	24.00	30.70
10	A3001-SR10	MX3.0-10AWB	27.00	33.70
11	A3001-SR11	MX3.0-11AWB	30.00	36.70
12	A3001-SR12	MX3.0-12AWB	33.00	39.70

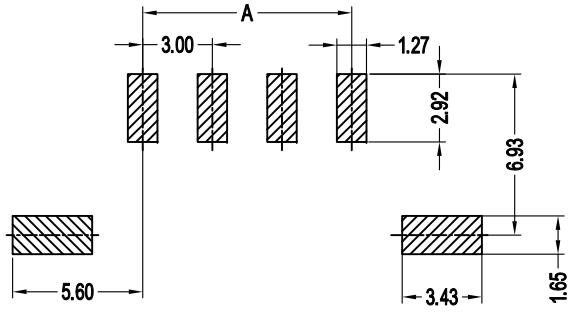

P.C.B LAYOUT

序号	图号	名称	材料	数量	附注
4		Solder nall	Stainless steel	1	
3		Solder nall	Brass Tin	2	
2		Contact	Brass Tin	N	
1		Housing	LCP(UL94V-0)	1	Black

未注公差

X.° ±3° X.X° ±0.5°

>0-3	>3-18	>18-50	>50-120
±0.12	±0.15	±0.3	±0.5

LHE® 浙江联和电子有限公司
ZHEJIANG LIANHE ELECTRONICS CO.,LTD

单位	比例	Design Units	SIZE	页码
MM Only	——	METRIC	A4	

制作	审核	批准	材料	图号	Part No
			见图解	品名	MX3.0-NAWB(79)

旧底图总号

底图总号

签 字

日 期

MX3.0连接器承认图面

REV	DESCRIPTION	DATE
A/0	原始版本	E
A/1	修订版本	

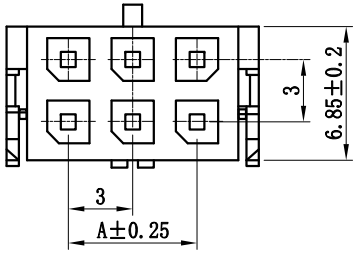

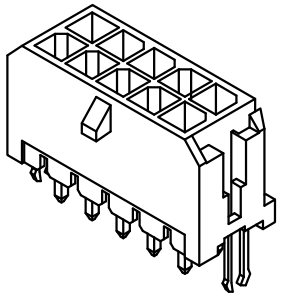

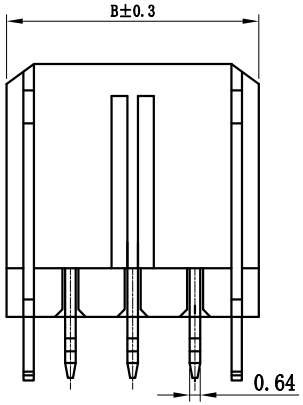

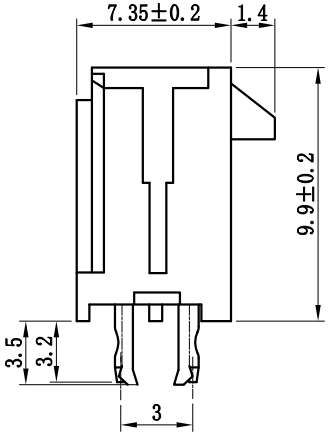

Poles	Part NO.		Dimensions mm	
			A	B
2	A3001-WVC01×2-K	MX3.0-2×1AC打点	--	6.65
4	A3001-WVC02×2-K	MX3.0-2×2AC打点	3.00	9.65
6	A3001-WVC03×2-K	MX3.0-2×3AC打点	6.00	12.65
8	A3001-WVC04×2-K	MX3.0-2×4AC打点	9.00	15.65
10	A3001-WVC05×2-K	MX3.0-2×5AC打点	12.00	18.65
12	A3001-WVC06×2-K	MX3.0-2×6AC打点	15.00	21.65
14	A3001-WVC07×2-K	MX3.0-2×7AC打点	18.00	24.65
16	A3001-WVC08×2-K	MX3.0-2×8AC打点	21.00	27.65
18	A3001-WVC09×2-K	MX3.0-2×9AC打点	24.00	30.65
20	A3001-WVC10×2-K	MX3.0-2×10AC打点	27.00	33.65
22	A3001-WVC11×2-K	MX3.0-2×11AC打点	30.00	36.65
24	A3001-WVC12×2-K	MX3.0-2×12AC打点	33.00	39.65

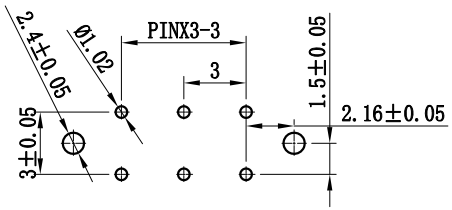

P.C.B LAYOUT

序号	图号	名称	材料	数量	附注
3		Press-fit	Brass Tin	2	
2		Contact	Brass Tin	N	
1		Housing	LCP(UL94V-0)	1	Black

未注公差

X.° ±3° X.X° ±0.5°

LHE® 浙江联和电子有限公司
ZHEJIANG LIANHE ELECTRONICS CO.,LTD

>0-3	>3-18	>18-50	>50-120	单位	比例	Design Units	SIZE	页码
±0.12	±0.15	±0.3	±0.5	MM Only	——	METRIC	A4	

制作	审核	批准	材料	图号		Part No
			见图解	品名	MX3.0-2×NAC打点-70	

旧底图总号

底图总号

签字

日期

MX3.0连接器承认图面

REV	DESCRIPTION	DATE
A/0	原始版本	E
A/1	修订版本	

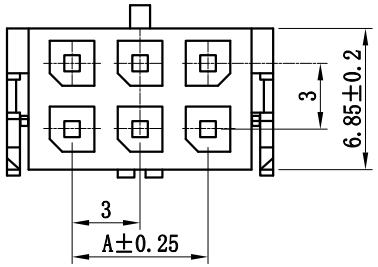

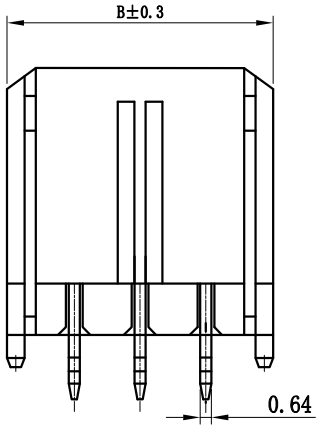

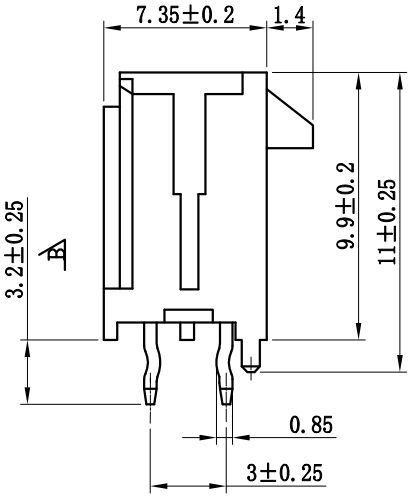

Poles	Part NO.		Dimensions mm A	Dimensions mm B
2	A3001-DWV01X2-K	MX3.0-2X1AD打点	--	6.65
4	A3001-DWV02X2-K	MX3.0-2X2AD打点	3.00	9.65
6	A3001-DWV03X2-K	MX3.0-2X3AD打点	6.00	12.65
8	A3001-DWV04X2-K	MX3.0-2X4AD打点	9.00	15.65
10	A3001-DWV05X2-K	MX3.0-2X5AD打点	12.00	18.65
12	A3001-DWV06X2-K	MX3.0-2X6AD打点	15.00	21.65
14	A3001-DWV07X2-K	MX3.0-2X7AD打点	18.00	24.65
16	A3001-DWV08X2-K	MX3.0-2X8AD打点	21.00	27.65
18	A3001-DWV09X2-K	MX3.0-2X9AD打点	24.00	30.65
20	A3001-DWV10X2-K	MX3.0-2X10AD打点	27.00	33.65
22	A3001-DWV11X2-K	MX3.0-2X11AD打点	30.00	36.65
24	A3001-DWV12X2-K	MX3.0-2X12AD打点	33.00	39.65

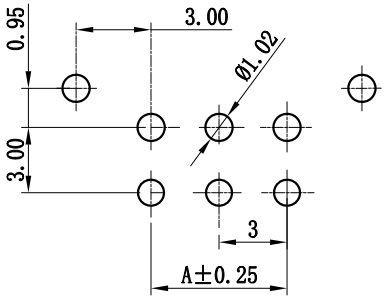

P.C.B LAYOUT

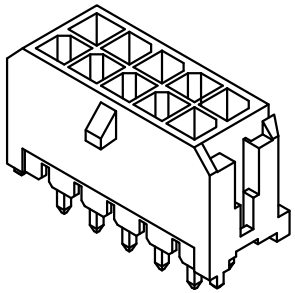

序号	图号	名称	材料	数量	附注
2		Contact	Brass Tin	N	
1		Housing	PA46(UL94V-0)	1	Black

未注公差

X.° ±3° X.X° ±0.5°

>0-3	>3-18	>18-50	>50-120
±0.12	±0.15	±0.3	±0.5

LHE® 浙江联和电子有限公司
ZHEJIANG LIANHE ELECTRONICS CO.,LTD

单位	比例	Design Units	SIZE	页码
MM Only	——	METRIC	A4	

制作	审核	批准	材料	图号	Part No
			见图解	品名	MX3.0-2XNAD打点-70

旧底图总号

底图总号

签字

日期

MX3.0连接器承认图面

REV	DESCRIPTION	DATE
A/0	原始版本	E
A/1	修订版本	

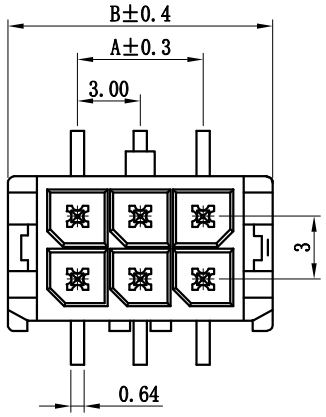

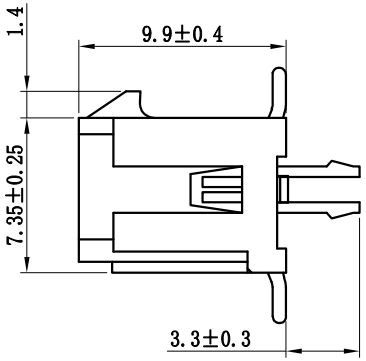

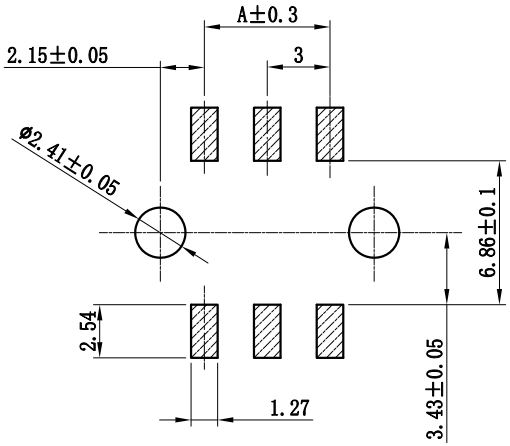

P.C.B LAYOUT

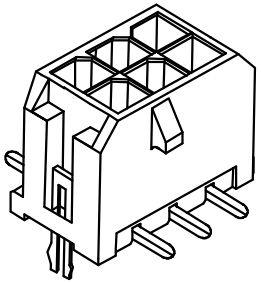

Poles	Part NO.		Dimensions mm A	Dimensions mm B
2	A3001-SVC01×2	MX3.0-2×1ABC	--	6.65
4	A3001-SVC02×2	MX3.0-2×2ABC	3.00	9.65
6	A3001-SVC03×2	MX3.0-2×3ABC	6.00	12.65
8	A3001-SVC04×2	MX3.0-2×4ABC	9.00	15.65
10	A3001-SVC05×2	MX3.0-2×5ABC	12.00	18.65
12	A3001-SVC06×2	MX3.0-2×6ABC	15.00	21.65
14	A3001-SVC07×2	MX3.0-2×7ABC	18.00	24.65
16	A3001-SVC08×2	MX3.0-2×8ABC	21.00	27.65
18	A3001-SVC09×2	MX3.0-2×9ABC	24.00	30.65
20	A3001-SVC10×2	MX3.0-2×10ABC	27.00	33.65
22	A3001-SVC11×2	MX3.0-2×11ABC	30.00	36.65
24	A3001-SVC12×2	MX3.0-2×12ABC	33.00	39.65

序号	图号	名称	材料	数量	附注
3		Press-fit	Brass Tin	2	
2		Contact	Brass Tin	N	
1		Housing	LCP(UL94V-0)	1	Black

未注公差

X.° ±3° X.X° ±0.5°

>0-3	>3-18	>18-50	>50-120
±0.12	±0.15	±0.3	±0.5

LHE® 浙江联和电子有限公司
ZHEJIANG LIANHE ELECTRONICS CO.,LTD

单位	比例	Design Units	SIZE	页码
MM Only	——	METRIC	A4	

制作	审核	批准	材料	图号		Part No
			见图解	品名	MX3.0-2×NABC-70	

旧底图总号

底图总号

签字

日期

MX3.0连接器承认图面

REV	DESCRIPTION	DATE
A/0	原始版本	E
A/1	修订版本	

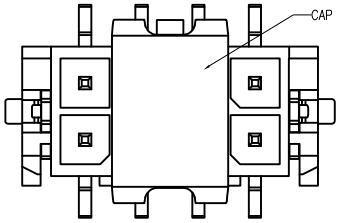

WITH COVER

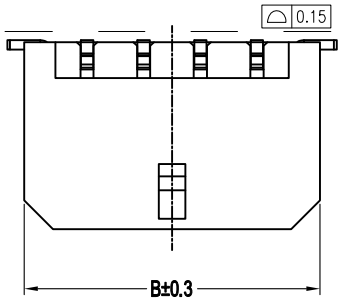

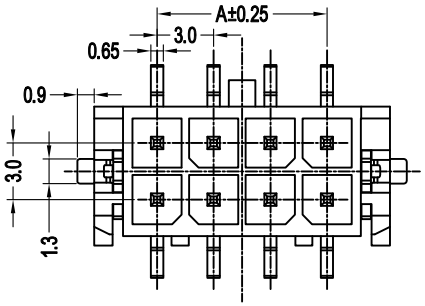

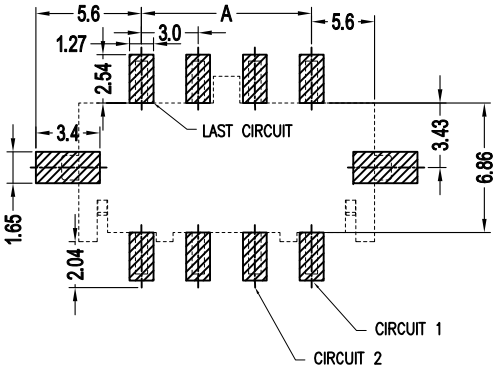

PCB LAYOUT(Tolerance:±0.05)

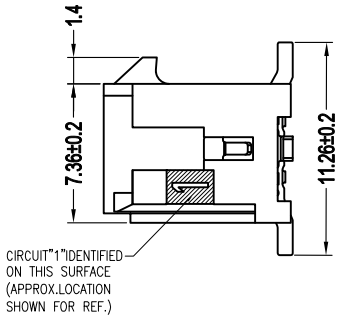

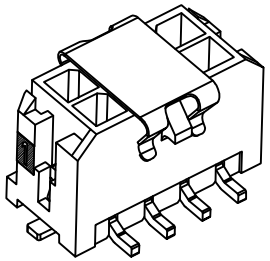

Poles	Part NO.		Dimensions mm	
			A	B
4	A3001-SV02×2	MX3.0-2×2AB	3.00	9.65
6	A3001-SV03×2	MX3.0-2×3AB	6.00	12.65
8	A3001-SV04×2	MX3.0-2×4AB	9.00	15.65
10	A3001-SV05×2	MX3.0-2×5AB	12.00	18.65
12	A3001-SV06×2	MX3.0-2×6AB	15.00	21.65
14	A3001-SV07×2	MX3.0-2×7AB	18.00	24.65
16	A3001-SV08×2	MX3.0-2×8AB	21.00	27.65
18	A3001-SV09×2	MX3.0-2×9AB	24.00	30.65
20	A3001-SV10×2	MX3.0-2×10AB	27.00	33.65
22	A3001-SV11×2	MX3.0-2×11AB	30.00	36.65
24	A3001-SV12×2	MX3.0-2×12AB	33.00	39.65

序号	图号	名称	材料	数量	附注
3		Solder nall	Brass Tin	2	
2		Contact	Brass Tin	N	
1		Housing	LCP(UL94V-0)	1	Black

未注公差

X.° ±3° X.X° ±0.5°

LHE® 浙江联和电子有限公司
ZHEJIANG LIANHE ELECTRONICS CO.,LTD

>0-3	>3-18	>18-50	>50-120	单位	比例	Design Units	SIZE	页码
±0.12	±0.15	±0.3	±0.5	MM Only	——	METRIC	A4	

制作	审核	批准	材料	图号		Part No
			见图解	品名	MX3.0-2×NAB(79)	

旧底图总号

底图总号

签字

日期

MX3.0连接器承认图面

REV	DESCRIPTION	DATE
A/0	原始版本	E
A/1	修订版本	

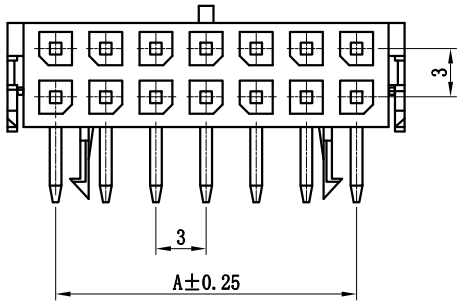

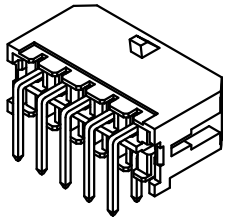

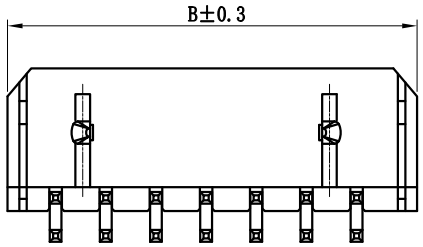

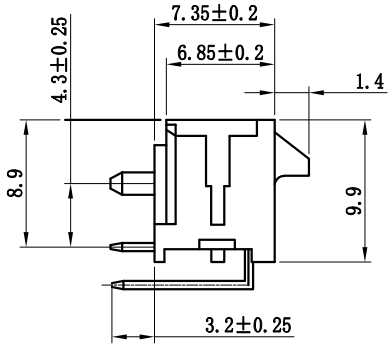

Poles	Part No.		Dimensions mm	
			A	B
2	A3001-WRB01×2	MX3.0-2×1AWD	--	6.65
4	A3001-WRB02×2	MX3.0-2×2AWD	3.00	9.65
6	A3001-WRB03×2	MX3.0-2×3AWD	6.00	12.65
8	A3001-WRB04×2	MX3.0-2×4AWD	9.00	15.65
10	A3001-WRB05×2	MX3.0-2×5AWD	12.00	18.65
12	A3001-WRB06×2	MX3.0-2×6AWD	15.00	21.65
14	A3001-WRB07×2	MX3.0-2×7AWD	18.00	24.65
16	A3001-WRB08×2	MX3.0-2×8AWD	21.00	27.65
18	A3001-WRB09×2	MX3.0-2×9AWD	24.00	30.65
20	A3001-WRB10×2	MX3.0-2×10AWD	27.00	33.65
22	A3001-WRB11×2	MX3.0-2×11AWD	30.00	36.65
24	A3001-WRB12×2	MX3.0-2×12AWD	33.00	39.65

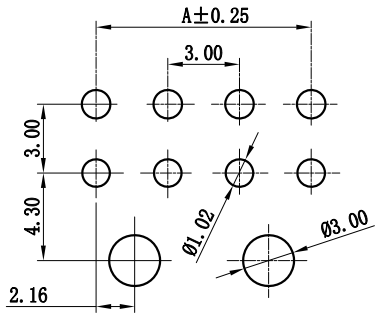

8P~24P P.C.B LAYOUT

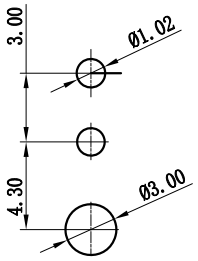

2P P.C.B LAYOUT

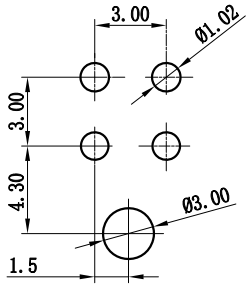

4P~6P P.C.B LAYOUT

序号	图号	名称	材料	数量	附注
2		Contact	Brass Tin	N	
1		Housing	PA46(UL94V-0)	1	Black

未注公差

X.° ±3° X.X° ±0.5°

>0-3	>3-18	>18-50	>50-120
±0.12	±0.15	±0.3	±0.5

LHE® 浙江联和电子有限公司
ZHEJIANG LIANHE ELECTRONICS CO.,LTD

单位	比例	Design Units	SIZE	页码
MM Only	——	METRIC	A4	

制作	审核	批准	材料	图号		Part No
			见图解	品名	MX3.0-2×NAWD-70	

旧底图总号

底图总号

签字

日期

MX3.0连接器承认图面

REV	DESCRIPTION	DATE
A/0	原始版本	E
A/1	修订版本	

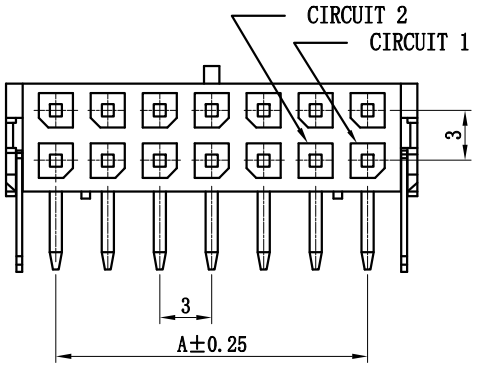

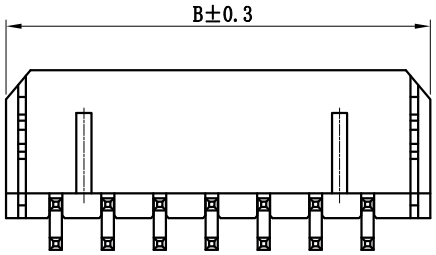

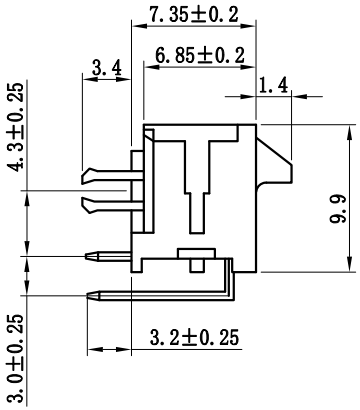

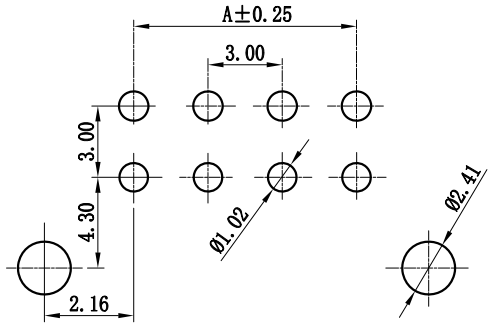

P.C.B LAYOUT

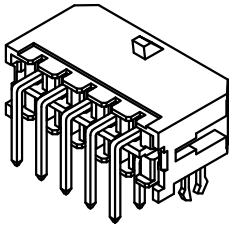

Poles	Part NO.		Dimensions mm A	Dimensions mm B
2	A3001-WRC01×2	MX3.0-2×1AWC	--	6.65
4	A3001-WRC02×2	MX3.0-2×2AWC	3.00	9.65
6	A3001-WRC03×2	MX3.0-2×3AWC	6.00	12.65
8	A3001-WRC04×2	MX3.0-2×4AWC	9.00	15.65
10	A3001-WRC05×2	MX3.0-2×5AWC	12.00	18.65
12	A3001-WRC06×2	MX3.0-2×6AWC	15.00	21.65
14	A3001-WRC07×2	MX3.0-2×7AWC	18.00	24.65
16	A3001-WRC08×2	MX3.0-2×8AWC	21.00	27.65
18	A3001-WRC09×2	MX3.0-2×9AWC	24.00	30.65
20	A3001-WRC10×2	MX3.0-2×10AWC	27.00	33.65
22	A3001-WRC11×2	MX3.0-2×11AWC	30.00	36.65
24	A3001-WRC12×2	MX3.0-2×12AWC	33.00	39.65

序号	图号	名称	材料	数量	附注
3		Press-fit	Brass Tin	2	
2		Contact	Brass Tin	N	
1		Housing	LCP(UL94V-0)	1	Black

未注公差

X.° ±3° X.X° ±0.5°

>0-3	>3-18	>18-50	>50-120
±0.12	±0.15	±0.3	±0.5

LHE® 浙江联和电子有限公司
ZHEJIANG LIANHE ELECTRONICS CO.,LTD

单位	比例	Design Units	SIZE	页码
MM Only	——	METRIC	A4	

制作	审核	批准	材料	图号	Part No
			见图解	品名	MX3.0-2×NAWC-70

旧底图总号
底图总号
签字
日期

MX3.0连接器承认图面

REV	DESCRIPTION	DATE
A/0	原始版本	E
A/1	修订版本	

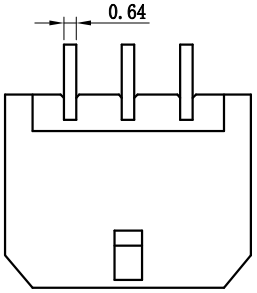

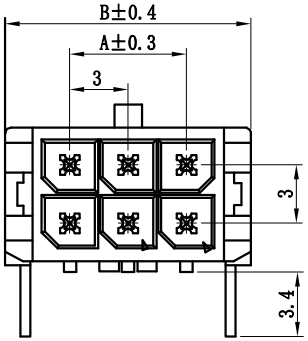

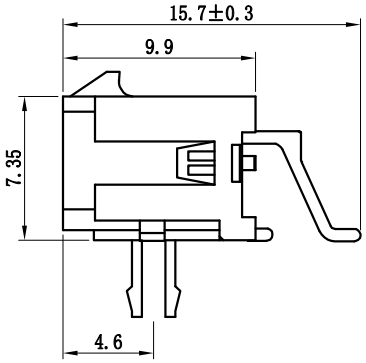

Poles	Part NO.		Dimensions mm	
			A	B
2	A3001-SRC01×2	MX3.0-2×1AWBC	--	6.65
4	A3001-SRC02×2	MX3.0-2×2AWBC	3.00	9.65
6	A3001-SRC03×2	MX3.0-2×3AWBC	6.00	12.65
8	A3001-SRC04×2	MX3.0-2×4AWBC	9.00	15.65
10	A3001-SRC05×2	MX3.0-2×5AWBC	12.00	18.65
12	A3001-SRC06×2	MX3.0-2×6AWBC	15.00	21.65
14	A3001-SRC07×2	MX3.0-2×7AWBC	18.00	24.65
16	A3001-SRC08×2	MX3.0-2×8AWBC	21.00	27.65
18	A3001-SRC09×2	MX3.0-2×9AWBC	24.00	30.65
20	A3001-SRC10×2	MX3.0-2×10AWBC	27.00	33.65
22	A3001-SRC11×2	MX3.0-2×11AWBC	30.00	36.65
24	A3001-SRC12×2	MX3.0-2×12AWBC	33.00	39.65

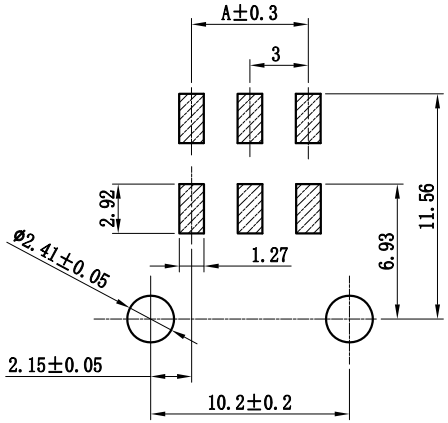

P.C.B LAYOUT

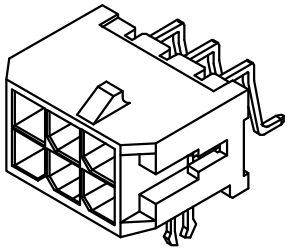

序号	图号	名称	材料	数量	附注
3		Press-fit	Brass Tin	2	
2		Contact	Brass Tin	N	
1		Housing	LCP(UL94V-0)	1	Black

未注公差			
X.° ±3°	X.X° ±0.5°		
>0-3	>3-18	>18-50	>50-120
±0.12	±0.15	±0.3	±0.5

LHE® 浙江联和电子有限公司
ZHEJIANG LIANHE ELECTRONICS CO.,LTD

单位	比例	Design Units	SIZE	页码
MM Only	——	METRIC	A4	

制作	审核	批准	材料	图号		Part No
			见图解	品名	MX3.0-2×NAWBC-70	

旧底图总号
底图总号
签字
日期

MX3.0连接器承认图面

REV	DESCRIPTION	DATE
A/0	原始版本	E
A/1	修订版本	

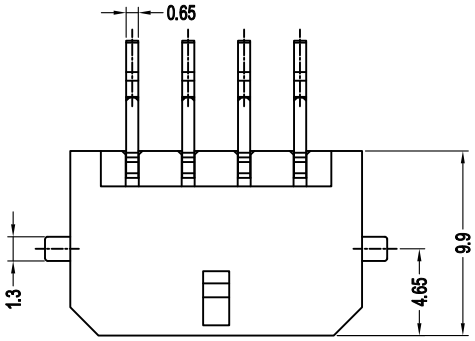

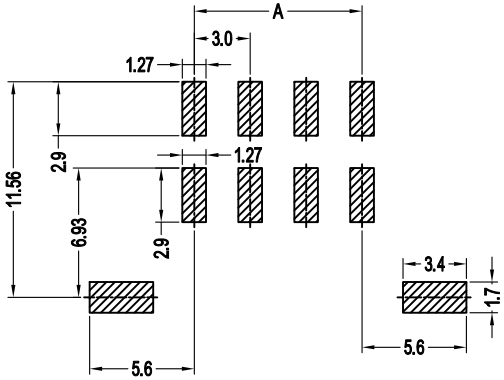

P.C.B LAYOUT

Poles	Part NO.		Dimensions mm	
			A	B
4	A3001-SR02×2	MX3.0-2×2AWB	3.00	9.65
6	A3001-SR03×2	MX3.0-2×3AWB	6.00	12.65
8	A3001-SR04×2	MX3.0-2×4AWB	9.00	15.65
10	A3001-SR05×2	MX3.0-2×5AWB	12.00	18.65
12	A3001-SR06×2	MX3.0-2×6AWB	15.00	21.65
14	A3001-SR07×2	MX3.0-2×7AWB	18.00	24.65
16	A3001-SR08×2	MX3.0-2×8AWB	21.00	27.65
18	A3001-SR09×2	MX3.0-2×9AWB	24.00	30.65
20	A3001-SR10×2	MX3.0-2×10AWB	27.00	33.65
22	A3001-SR11×2	MX3.0-2×11AWB	30.00	36.65
24	A3001-SR12×2	MX3.0-2×12AWB	33.00	39.65

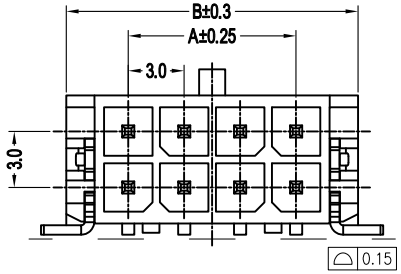

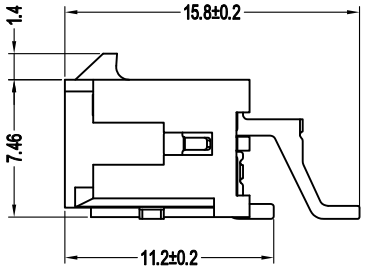

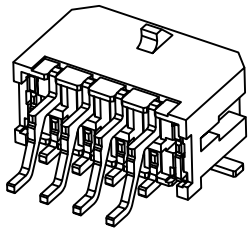

序号	图号	名称	材料	数量	附注
3		Solder nall	Brass Tin	2	
2		Contact	Brass Tin	N	
1		Housing	LCP(UL94V-0)	1	Black

未注公差

X.° ±3° X.X° ±0.5°

>0-3	>3-18	>18-50	>50-120
±0.12	±0.15	±0.3	±0.5

LHE® 浙江联和电子有限公司
ZHEJIANG LIANHE ELECTRONICS CO.,LTD

单位	比例	Design Units	SIZE	页码
MM Only	——	METRIC	A4	

制作	审核	批准	材料	图号		Part No
			见图解	品名	MX3.0-2×NAWB(79)	

旧底图总号

底图总号

签字

日期

MX3.0连接器承认图面

REV	DESCRIPTION	DATE
A/0	原始版本	E
A/1	修订版本	

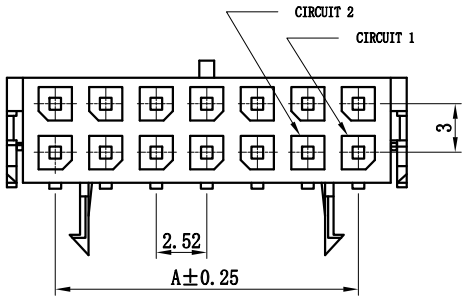

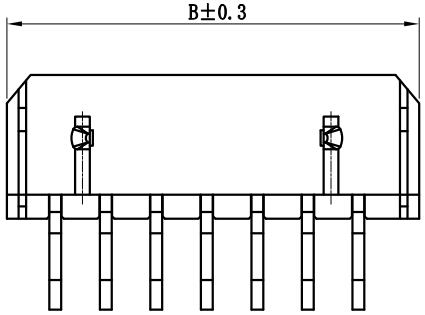

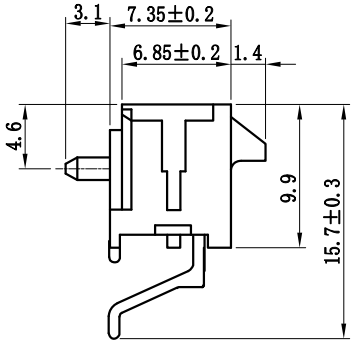

Poles	Part NO.		Dimensions mm	
			A	B
2	A3001-SRB01×2	MX3.0-2×1AWBD	--	6.65
4	A3001-SRB02×2	MX3.0-2×2AWBD	3.00	9.65
6	A3001-SRB03×2	MX3.0-2×3AWBD	6.00	12.65
8	A3001-SRB04×2	MX3.0-2×4AWBD	9.00	15.65
10	A3001-SRB05×2	MX3.0-2×5AWBD	12.00	18.65
12	A3001-SRB06×2	MX3.0-2×6AWBD	15.00	21.65
14	A3001-SRB07×2	MX3.0-2×7AWBD	18.00	24.65
16	A3001-SRB08×2	MX3.0-2×8AWBD	21.00	27.65
18	A3001-SRB09×2	MX3.0-2×9AWBD	24.00	30.65
20	A3001-SRB10×2	MX3.0-2×10AWBD	27.00	33.65
22	A3001-SRB11×2	MX3.0-2×11AWBD	30.00	36.65
24	A3001-SRB12×2	MX3.0-2×12AWBD	33.00	39.65

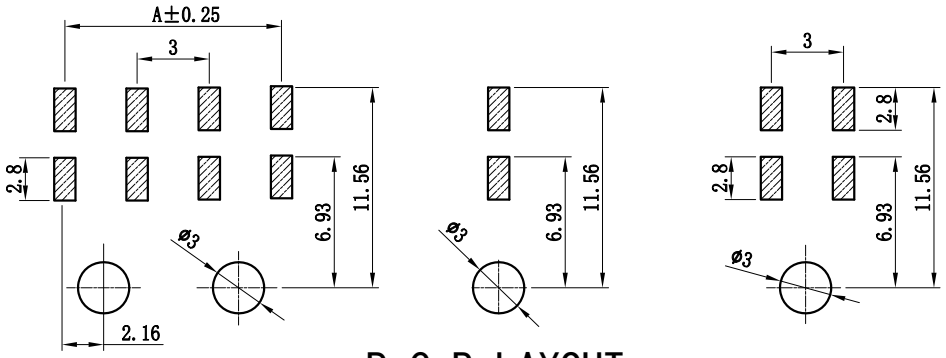

P.C.B LAYOUT

序号	图号	名称	材料	数量	附注
2		Contact	Brass Tin	N	
1		Housing	LCP(UL94V-0)	1	Black

未注公差 X.° ±3° X.X° ±0.5°

LHE® 浙江联和电子有限公司 ZHEJIANG LIANHE ELECTRONICS CO.,LTD

>0-3	>3-18	>18-50	>50-120	单位	比例	Design Units	SIZE	页码
±0.12	±0.15	±0.3	±0.5	MM Only	——	METRIC	A4	

制作	审核	批准	材料	图号		Part No
			见图解	品名	MX3.0-2×NAWBD-70	

旧底图总号

底图总号

签字

日期

MX3.0连接器承认图面

REV	DESCRIPTION	DATE
A/0	原始版本	E
A/1	修订版本	

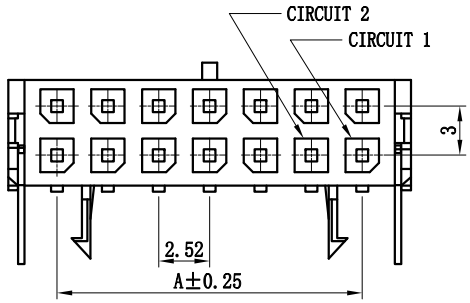

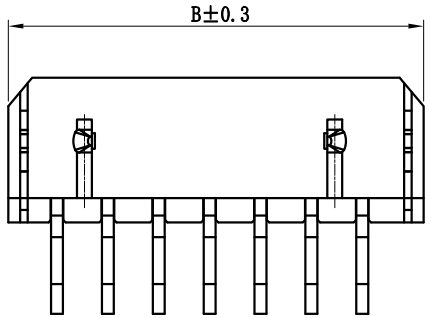

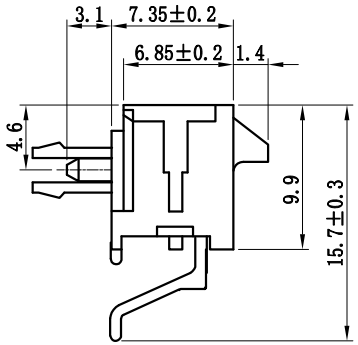

Poles	Part NO.		Dimensions mm	
			A	B
2	A3001-SRD01×2	MX3.0-2×1AWBDB	--	6.65
4	A3001-SRD02×2	MX3.0-2×2AWBDB	3.00	9.65
6	A3001-SRD03×2	MX3.0-2×3AWBDB	6.00	12.65
8	A3001-SRD04×2	MX3.0-2×4AWBDB	9.00	15.65
10	A3001-SRD05×2	MX3.0-2×5AWBDB	12.00	18.65
12	A3001-SRD06×2	MX3.0-2×6AWBDB	15.00	21.65
14	A3001-SRD07×2	MX3.0-2×7AWBDB	18.00	24.65
16	A3001-SRD08×2	MX3.0-2×8AWBDB	21.00	27.65
18	A3001-SRD09×2	MX3.0-2×9AWBDB	24.00	30.65
20	A3001-SRD10×2	MX3.0-2×10AWBDB	27.00	33.65
22	A3001-SRD11×2	MX3.0-2×11AWBDB	30.00	36.65
24	A3001-SRD12×2	MX3.0-2×12AWBDB	33.00	39.65

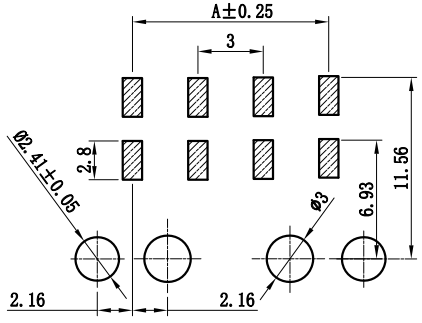

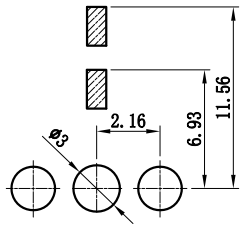

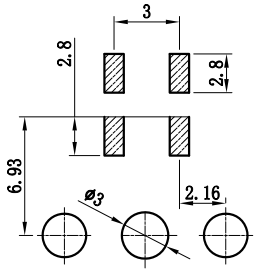

P.C.B LAYOUT

序号	图号	名称	材料	数量	附注
3		Press-fit	Brass Tin	2	
2		Contact	Brass Tin	N	
1		Housing	LCP(UL94V-0)	1	Black

未注公差				单位	比例	Design Units	SIZE	页码
X.° ±3° X.X° ±0.5°								
>0-3	>3-18	>18-50	>50-120					
±0.12	±0.15	±0.3	±0.5	MM Only	——	METRIC	A4	
制作	审核	批准		材料	图号			Part No
				见图解	品名	MX3.0-2×NAWBDB-70		

LHE® 浙江联和电子有限公司
ZHEJIANG LIANHE ELECTRONICS CO.,LTD

旧底图总号
底图总号
签字
日期

产品规格书

PRODUCT SPECIFICAION

版本号
Version Number: B

产品编码
Part Number: C3001～C3004

■ 规格 Specifications

◆1、极数 Poles: 2 to 12P/1×2 to 12×2P
◆2、额定电流 Current rating: 8.5A AC,DC
◆3、额定电压 Voltage rating: 250V AC,DC
◆4、温度范围 Temperature range: -25℃ to +105℃
◆5、接触电阻 Contact resistance: ≤15mΩ
◆6、绝缘电阻 Insulation resistance: ≥1000MΩ
◆7、耐电压 Withstand voltage: 1500V AC/minute
◆8、适用线规 Applicable wire: AWG #24 to #20
◆9、适用基板厚度(Applicable PC board thickness):1.6 mm

产品性能测试 Performance test			
	项目 Item	测试条件 Test Condition	规格要求 Requirement
1	外观 Appearance	目测 Visual by eye 视力 Light: ＞1.0 照明 Lamp: 200～300Lx 目测距离 Space: 0.3～0.5m	1.塑料件表面应无明显疤痕、凹陷、开裂及影响使用的变形。 Plastic part:smooth and flat surface without discolor,broken,crack distortion defects is acceptable. 2.金属件表面无锈蚀、氧化、无明显的机械损伤等缺陷。 Metal part:btight and even surface without rust,oxide,fog and obvious physical damage defects is acceptable. 3.导线表面清洁、无破损等缺陷，印字及标志清晰。 Wire:clearing surface without discolor,broken defects,indistinct words and mark is acceptable.
2	接触电阻 Contact Resistance	插合连接器,用小功率电路进行测试。 Mate connectors,measure by dry circuit.	15mΩ MAX
3	绝缘电阻 Insulation Resistance	在相邻接触件之间或地线之间，用500V DC电压进行测试。 Apply 500V DC between adjacent terminal or ground.	1000MΩ MIN
4	耐电压 Dielectric Strength	相邻接触件之间或地线之间施加50Hz 1500V AC(有效值),漏电流1mA的电压作用，时间1min。 Mate connectors, apply 1500V AC for 1 minute between adjacent terminal or ground.	无击穿和飞弧现象 No Breakdown

产品规格书

PRODUCT SPECIFICAION

版本号
Version Number: B

产品编码
Part Number: C3001～C3004

产品性能测试 Performance test				
	项目 Item	测试条件 Test Condition	规格要求 Requirement	
5	压着部位抗张强度 Crimping Pull Out Force	在试验装置夹头中固定测试样品，在连接的轴线方向施加张力;速度不大于25mm/min。 Fix the crimped terminal,apply axial pull out force on the wire at the speed rate of not more 25mm/min.	AWG.20#	40N MIN
			AWG.22#	30N MIN
			AWG.24#	20N MIN
6	壳体/端子固定力 Terminal/Housing Retention Force	固定连接器或测力计，在连接器轴线方向施加规定的拉力;速度不大于25mm/min。 Apply axial pull out force at the speed rate of not more 25mm/min on the pin assembled in the housing.	20N MIN	
7	针的固定力 Pin Retention Force	固定连接器或测力计，在连接器轴线方向对针施加规定的推力;速度不大于25mm/min。 Apply axial push out force at the speed rate of not more 25mm/minute on the terminal assembled in the base.	20N MIN	
8	可焊性 Solderability	把测试样品需要焊接的部位浸入焊锡炉中(锡炉温度235℃±5℃)2±0.5s秒钟。 Soldering time: 2±0.5s second Solder Temperature:235℃±5℃	上锡率≥90% 90% of immersed area must show no voids,pin holes	
9	耐焊接热 Resistance to Soldering Heat	把测试样品需要焊接的部位浸入焊锡炉中(锡炉温度260℃)；2±0.5秒钟后在正常的条件下恢复1小时。 Soldering time: 2±0.5 second Solder Temperature:260℃	外观 Appearance	无损伤 No Damage
10	耐高温 Heat Resistance	连接器配合后，于105℃±2℃的空气中放置96小时，然后再回到室温中放置1～2h小时测定 Mated connectors are exposed to a temperature of 105℃±2℃ for 96 hours.	外观 Appearance 接触电阻 LLCR	无损伤 No Damage 25mΩ Max
11	耐低温 Clod Resistance	连接器配合后，于-25℃±2℃的空气中放置96小时，然后再回到室温中放置1～2h小时测定 Mated connectors are exposed to a temperature of -25℃±2℃for 96 hours.	外观 Appearance 接触电阻 LLCR	无损伤 No Damage 25mΩ Max
12	温度上升 Temperature Rise	插合连接器,通以最大允许电流。 Carring rated current load.	温度最大上升 Temperature Rise	30℃ MAX

产品规格书

PRODUCT SPECIFICAION

版本号
Version Number: B

产品编码
Part Number: C3001～C3004

产品性能测试 Performance test				
	项目 Item	测试条件 Test Condition	规格要求 Requirement	
13	恒定湿热 Humidity	温度：40±2℃ 相对湿度：90%～95% 搁置时间：96小时，取出恢复2h后检查 Temperature：40±2℃ Relative Humidity：90%～95% Duration：96 hours	外观 Appearance	无损伤 No Damage
			耐电压 Dielectric Strength	1500V,AC /minute
			绝缘电阻 Insulation Resistance	1000MΩ MIN
			接触电阻 LLCR	25mΩ MAX
14	温度循环 Temperature cycle	把测试样品放入高低温试验箱中,按下列步骤调试温度: a)在-25℃±2℃的恒温条件下放置0.5小时; b)在105℃±2℃的恒温条件下放置0.5小时; 从a)到b)为一个循环周期,共进行5个循环。恢复1h后检查。状态转换时间不多于1小时。 Mated connectors are exposed to 5 cycles of: a)-25℃±2℃ 0.5hour b)+105℃±2℃ 0.5hour	外观 Appearance	无损伤 No Damage
			耐电压 Dielectric Strength	1500V,AC /minute
			绝缘电阻 Insulation Resistance	1000MΩ MIN
			接触电阻 LLCR	25mΩ MAX
15	机械振动 Vibration	插合连接器，串联在一直流电源上，电流100mA;并模拟正常工作状态,振频为10～55Hz、振幅1.5mm；55～500Hz、加速度50m/s^2,每一轴线扫频循环次数10次、2小时。 Frequency：10～55Hz Amplitude：±1.5mm Frequency：＞55～500Hz Acceleration：50m/s^2 Duration：2 hours in each X,Y,Z axes	外观 Appearance	无损伤 No Damage
			接触电阻 Contact Resistance	25mΩ MAX
			中断 Intermittence	1μsec MAX
16	机械寿命 Repeated insertion/ withdrawal	以每分钟插拔10次的速率，插拔50次。 When mated up to 50 cycles repeatedly by the rate of 10 cycles per minute.	外观 Appearance	无损伤 No Damage
			耐电压 Dielectric Strength	1500V,AC /minute
			绝缘电阻 Insulation	1000MΩ MIN
			接触电阻 Contact Resistance	25mΩ MAX

产品规格书

PRODUCT SPECIFICAION

版本号
Version Number: B

产品编码
Part Number: C3001~C3004

产品性能测试 Performance test					
	项目 Item	测试条件 Test Condition	规格要求 Requirement		
17	盐雾 Salt Spray	把先冲后镀* 的测试样品从试验箱顶悬挂下来，采用浓度为5%±1(质量百分比)的氯化钠溶液，连续雾化24小时，试验后用流动的蒸馏水轻轻洗去表面沉积物。在常温常驻湿条件下恢复1～2小时。 24 hour exposure to a saltspray from the 5%±1 solution.	外观无损伤(五金件应无露出底金属的严重锈蚀；使用预镀的型材，其落料面允许有不影响其性能的轻微腐蚀。) Appearance:No Damage(No erosion with material exposed.And with plating material,slight erosion on the cutting surface acceptable)		
18	插入力与拔出力 Insertion and Withdrawal Force	相配的连接器以1mm/s～5mm/s的速度沿接插器轴线方向插入和拔出。 Insertion and withdraw connectors at the speed rate of 1mm/s～5mm/s.		插入力（最大值） Insertion (Max)	拔出力（最小值） Withdrawal (Min)
			SINGLE PIN	10N	2N

* 先冲后镀为定制端子。常规端子为先镀后冲，无法通过盐雾试验。

1	高低温环境测试从85℃，更新到105℃.更改电流	根据客户要求，进行统一的测试升级	20220929	玉夫
序号	变更记录	变更原因	变更时间	责任人
变更记录				

制订 Edit: YF　审核 Check: WZY　批准 Approval: CZH　日期 Date:

焊接条件

Conditions for soldering

版本号
Version Number: B

产品编码
Part Number: C3001~C3004

Pb-free炉温要求 Pb-free reflow profile requirements

参数 Parameter	参考 Reference	规格 Specification
平均温度梯度预热 Average Temperature Gradient Preheating		2.5℃/s
浸泡时间 Soak time	tsoak 2-3	minutes
150℃以上时间 Time above 150℃	T1	60s
180℃以上时间 Time above 180℃	T2	50s
250℃以上时间 Time above 250℃	T3	2±0.5s
焊接温度 Peak temperature in reflow	Tpeak	255℃(-0/+5℃)
温度梯度的冷却 Temperature gradient in cooling		Max -5℃/s

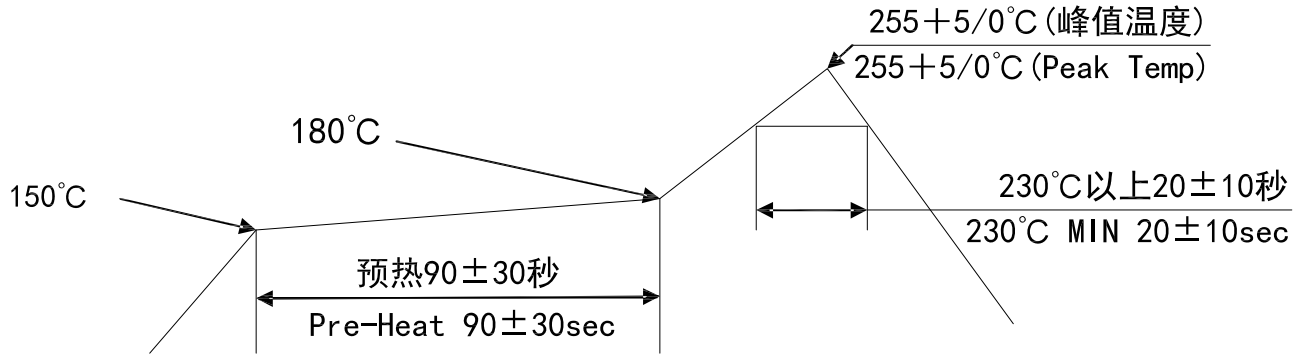

温度条件图

TEMPERATURE CONDITION GRAPH

注：该剖面的最低要求耐热性的评价焊接部件。传热方法用于回流焊热空气对流。实际的空气温度用来实现规定的轮廓，很大程度上取决于回流装置。

Note: The minimum required heat resistance of the section is to evaluate the welded components. Heat transfer method is used for hot air convection in reflow welding. The actual air temperature used to achieve the specified profile depends largely on the reflux device.

浙江联和电子有限公司

产品性能测试报告

品名 (DESCRIPTION)	MX3.0	测定者 (Inspector)	吴智原	测定条件 (Test Condition)	温度: 22℃ (Temperature)
料号 (MODEL NO.)	C3001&C3002&C3004	日期 (Date)	2019. 09. 28		湿度: 65% (Humidity)

试验项目 (Test Title)	规格 (Specification)		测定值(Data)					COM
			X1	X2	X3	X4	X5	
带线胶壳与针座插拔力 <带锁扣> (Connector assemble with cable and wafer, mating and unmating force with latch)	2 pin Unit: N Mating force 40 max. Unmating force 34 min.	插入(Mating)	17.5	15	18	18.5	16	ok
		拔出(Unmating)	56.5	52.5	50	53	54.5	ok
	8 pin Unit: N Mating force 100 max. Unmating force 46 min.	插入(Mating)	57.5	58	64.5	56	58.5	ok
		拔出(Unmating)	98	100	97.5	95.5	99	ok
端子和胶壳的固定力 (Terminal Retention in housing)	20N Min(MX3.0-YT)		32	35	32.5	31	34	ok
端子和胶壳的固定力 (Terminal Retention in housing)	20N Min(MX3.0-AT)		41	38.5	37.5	39	37	ok
端子和端子单独插入力 (Single terminal and terminal insertion force)	10N Max		7.5	7.0	6.0	6.5	7.5	ok
端子和端子单独拔出力 (Single terminal and terminal withdrawal force)	2N Min		4.25	3.5	4.0	3.75	4.5	ok
插针和壳体的固定力 (PIN Retention in housing)	20N Min		38.5	35.5	36.0	39.0	37.5	ok
盐雾试验 (Salt spray)	雾化24小时，后镀端子不能有腐蚀现象 (Spray time:24 hours，terminals stamping then plating must not corrode)		PASS	PASS	PASS	PASS	PASS	ok
	接触电阻 (Contact Resistance)	25mΩ Max	12.7	13.2	13.4	11.9	12.5	ok
盐雾试验 (Salt spray)	雾化24小时，插针不能有腐蚀现象 (Spray time:24 hours，PINs must not corrode)		PASS	PASS	PASS	PASS	PASS	ok
	接触电阻 (Contact Resistance)	25mΩ Max	13.1	11.5	11.8	12.9	13.5	ok
温度循环 (Temperature cycling)	外观 (Appearanc)	无损伤 (No damage)	PASS	PASS	PASS	PASS	PASS	ok
	接触电阻 (Contact Resistance)	25mΩ Max	10.4	10.8	11.5	12.7	11.7	ok
	绝缘电阻 (Insulation Resistance)	1000MΩ Min	PASS	PASS	PASS	PASS	PASS	ok
	耐电压 (Dielectric Withstanding Voltage)	1500V,AC/minute	PASS	PASS	PASS	PASS	PASS	ok

LHE 浙江联和电子有限公司

试 验 报 告

试验项目:针焰实验　　试验日期：2019/09/17

产品或零件名称	PA66　94V0 样条	生产单位	注塑
样品数量	各 3PCS	检验标准	GB/T5169.5-2008
检验设备	针焰实验箱	进货批号	/

标准要求	指标	a.试验样品无火焰和灼热，并且规定的铺底层或包装绢纸没有起燃 b.在移开针焰后，试验样品和周围的零部件的火焰或灼热在 30s 之内熄灭，即 tb＜30s,而且周围的零部件没有完全烧毁，以及规定的铺底层或包装绢纸没有起燃
	试验条件	施加试验火焰持续时间为 12s。火焰高度 12mm±1mm。
试验结果		 产品施焰时间 12s,续燃时间 2.6s。无滴落物。
判定		符合要求 实验员：唐安英　　审核员：熊英

表单编号：QR/LHE-PZ-019　　**版本：B/0**

浙江联和电子有限公司

灼热丝（GWIT/GWFI）测试报告

序号	材料规格	试片尺寸（长×宽×厚）	起始温度（℃）	样品	起燃时间(Ti)	熄灭时间(Te)	现象记录	GWIT	GWFI
		单位：mm			单位：秒			判定：PASS或FAIL	
1	A66V0 002	60X60X2.5	750	第1个	不起燃	/	不起燃，无滴落	PASS（GWIT:775/2.5）	PASS（GWFI:750/2.5）
				第2个	不起燃	/	不起燃，无滴落		
				第3个	不起燃	/	不起燃，无滴落		
2	A66V0 002	60X60X2.5	775	第1个	不起燃	/	不起燃，无滴落	FAIL	PASS（GWFI:775/2.5）
				第2个	不起燃	/	不起燃，无滴落		
				第3个	8	26	接触后很快就起燃，熔融但无滴落，起燃后26S熄灭		
3	A66V0 002	60X60X2.5	800	第1个	6	32	接触后很快就起燃，熔融但无滴落，起燃后32S熄灭	FAIL	PASS（GWFI:800/2.5）
				第2个	5	31	接触后很快就起燃，熔融但无滴落，起燃后28S熄灭		
				第3个	6	33	接触后很快就起燃，熔融但无滴落，起燃后33S熄灭		

测试须知：1.灼热丝起燃温度（GWIT）记录值为起始温度加25K（对于900℃和930℃则是30K，960℃记为GWIT:>960/厚度）；
2.产品在移开灼热丝之后持续燃烧的时间≤30s，即Te≤Ta（施加时间）+30S，并且包装娟纸没有起燃，则灼热丝可燃性指数（GWFI）即为PASS，记录为 GWFI:温度/厚度；
3.本实验灼热丝Ta（施加时间）为30S，则Te≤60S
4.如果3个其中有1个不合格则最终结果为不合格；
5.本实验根据GB/T 5169.12-2006及GB/T 5169.13-2013执行。
6.本实验仅针对灼热丝材料的产品。

检测：吴智原　　确认：陈浙海　　日期：2019-09-11

ECBT2.E364711 - Connectors for Use in Data, Signal, Control and Power Applications - Component

Connectors for Use in Data, Signal, Control and Power Applications - Component

See General Information for Connectors for Use in Data, Signal, Control and Power Applications - Component

ZHEJIANG LIANHE ELECTRONIC CO LTD E364711
Chuangxin Road, YueQing Bay Port Zone
Yueqing, Zhejiang 325600 CHINA
Connector, Model(s) 1.58-LHE f/b 2 , f/b 1 thru 12, f/b A2 or AW., 1.58-LHE f/b 2 thru 6, f/b A2 or AW

Connector, Model(s) 1.58-LHE followed by 2, followed by 1 thru 12, followed by A(T).

Connector, Model(s) 1.58-LHE, f/b 2 thru 6 , f/b A(T)., 1.58-LHE, f/b 2 thru 6, f/b Y(T), 1.58-LHE, f/b 2, f/b 1 thru 12 , f/b Y(T)., 2510-LHE f/b 2 , f/b 1 thru 12, f/b A2 or AW, 2510-LHE f/b 2 thru 6, f/b A2 or AW

Connector, Model(s) 2510-LHE followed by 2, followed by 1 thru 12, followed by A(T)

Connector, Model(s) 2510-LHE, f/b 2 thru 6 , f/b A(T), 2510-LHE, f/b 2 thru 6, f/b Y(T), 2510-LHE, f/b 2, f/b 1 thru 12 , f/b Y(T), 5.08-LHE f/b 2 , f/b 1 thru 12, f/b A2 or AW, 5.08-LHE f/b 2 thru 6, f/b A2 or AW

Connector, Model(s) 5.08-LHE followed by 2, followed by 1 thru 12, followed by A(T)

Connector, Model(s) 5.08-LHE, f/b 2 thru 6 , f/b A(T), 5.08-LHE, f/b 2 thru 6, f/b Y(T), 5.08-LHE, f/b 2, f/b 1 thru 12 , f/b Y(T), 51005-LHE f/b 2 , f/b 1 thru 12, f/b A2 or AW, 51005-LHE f/b 2 thru 6, f/b A2 or AW

Connector, Model(s) 51005-LHE followed by 2, followed by 1 thru 12, followed by A(T)

Connector, Model(s) 51005-LHE, f/b 2 thru 6 , f/b A(T), 51005-LHE, f/b 2 thru 6, f/b Y(T), 51005-LHE, f/b 2, f/b 1 thru 12 , f/b Y (T), 51006-LHE f/b 2 , f/b 1 thru 12, f/b A2 or AW, 51006-LHE f/b 2 thru 6, f/b A2 or AW

Connector, Model(s) 51006-LHE followed by 2, followed by 1 thru 12, followed by A(T)

Connector, Model(s) 51006-LHE, f/b 2 thru 6 , f/b A(T), 51006-LHE, f/b 2 thru 6, f/b Y(T), 51006-LHE, f/b 2, f/b 1 thru 12 , f/b Y (T), 5102-LHE f/b 2 , f/b 1 thru 12, f/b A2 or AW, 5102-LHE f/b 2 thru 6, f/b A2 or AW

Connector, Model(s) 5102-LHE followed by 2, followed by 1 thru 12, followed by A(T)

Connector, Model(s) 5102-LHE, f/b 2 thru 6 , f/b A(T), 5102-LHE, f/b 2 thru 6, f/b Y(T), 5102-LHE, f/b 2, f/b 1 thru 12 , f/b Y(T), 5240-LHE f/b 2 , f/b 1 thru 12, f/b A2 or AW, 5240-LHE f/b 2 thru 6, f/b A2 or AW

Connector, Model(s) 5240-LHE followed by 2, followed by 1 thru 12, followed by A(T)

Connector, Model(s) 5240-LHE, f/b 2 thru 6 , f/b A(T), 5240-LHE, f/b 2 thru 6, f/b Y(T), 5240-LHE, f/b 2, f/b 1 thru 12 , f/b Y(T), 5500-LHE f/b 2 , f/b 1 thru 12, f/b A2 or AW, 5500-LHE f/b 2 thru 6, f/b A2 or AW

Connector, Model(s) 5500-LHE followed by 2, followed by 1 thru 12, followed by A(T)

Connector, Model(s) 5500-LHE, f/b 2 thru 6 , f/b A(T), 5500-LHE, f/b 2 thru 6, f/b Y(T), 5500-LHE, f/b 2, f/b 1 thru 12 , f/b Y(T), 5557 followed by 2 thru 6, followed by A(T), 5557 followed by 2 thru 6, followed by A2 or AW, 5557 followed by 2 thru 6, followed by Y(T)

Connector, Model(s) 5557 followed by 2, followed by 1 thru 12, followed by A(T).

Connector, Model(s) 5557 followed by 2, followed by 1 thru 12, followed by A2 or AW

Connector, Model(s) 5557 followed by 2, followed by 1 thru 12, followed by Y(T)

Connector, Model(s) 5559-LHE f/b 2 , f/b 1 thru 12, f/b A2 or AW, 5559-LHE f/b 2 thru 6, f/b A2 or AW

Connector, Model(s) 5559-LHE followed by 2, followed by 1 thru 12, followed by A(T).

Connector, Model(s) 5559-LHE, f/b 2 thru 6 , f/b A(T), 5559-LHE, f/b 2 thru 6, f/b Y(T), 5559-LHE, f/b 2, f/b 1 thru 12 , f/b Y(T), 5566-LHE f/b 2 , f/b 1 thru 12, f/b A2 or AW, 5566-LHE f/b 2 thru 6, f/b A2 or AW

Connector, Model(s) 5566-LHE followed by 2, followed by 1 thru 12, followed by A(T)

Connector, Model(s) 5566-LHE, f/b 2 thru 6 , f/b A(T), 5566-LHE, f/b 2 thru 6, f/b Y(T), 5566-LHE, f/b 2, f/b 1 thru 12 , f/b Y(T), 5569-LHE f/b 2 , f/b 1 thru 12, f/b A2 or AW, 5569-LHE f/b 2 thru 6, f/b A2 or AW

Connector, Model(s) 5569-LHE followed by 2, followed by 1 thru 12, followed by A(T)

Connector, Model(s) 5569-LHE, f/b 2 thru 6 , f/b A(T), 5569-LHE, f/b 2 thru 6, f/b Y(T), 5569-LHE, f/b 2, f/b 1 thru 12 , f/b Y(T), 5600-LHE f/b 2 , f/b 1 thru 12, f/b A2 or AW, 5600-LHE f/b 2 thru 6, f/b A2 or AW

Connector, Model(s) 5600-LHE followed by 2, followed by 1 thru 12, followed by A(T)

Connector, Model(s) 5600-LHE, f/b 2 thru 6 , f/b A(T), 5600-LHE, f/b 2 thru 6, f/b Y(T), 5600-LHE, f/b 2, f/b 1 thru 12 , f/b Y(T), 63080-LHE f/b 2 , f/b 1 thru 12, f/b A2 or AW, 63080-LHE f/b 2 thru 6, f/b A2 or AW

Connector, Model(s) 63080-LHE followed by 2, followed by 1 thru 12, followed by A(T)

Connector, Model(s) 63080-LHE, f/b 2 thru 6 , f/b A(T), 63080-LHE, f/b 2 thru 6, f/b Y(T), 63080-LHE, f/b 2, f/b 1 thru 12 , f/b Y (T), B2502 followed by 2 thru 16, followed by Y(T), BH3.5-2A(T), BH3.5-2Y(T), MX3.0 followed by 2 thru 12, followed by A(T), MX3.0 followed by 2 thru 12, followed by A2 or AW, MX3.0 followed by 2 thru 12, followed by Y(T)

Connector, Model(s) MX3.0 followed by 2, followed by 1 thru 12, followed by A(T).

Connector, Model(s) MX3.0 followed by 2, followed by 1 thru 12, followed by A2 or AW

Connector, Model(s) MX3.0 followed by 2, followed by 1 thru 12, followed by Y(T)

Connector, Model(s) PA-LHE f/b 2, f/b 1 thru 12, f/b Y(T), PA-LHE followed by 2 thru 12, followed by A(T)

Connector, Model(s) PA-LHE followed by 2 thru 12, followed by A2 or AW

Connector, Model(s) PA-LHE followed by 2 thru 12, followed by Y(T)

Connector, Model(s) PA-LHE followed by 2, followed by 1 thru 12, followed by A(T)

Connector, Model(s) PA-LHE followed by 2, followed by 1 thru 12, followed by A2 or AW

Connector, Model(s) PH, PHB, XHB, JC25, SCN followed by -2 thru -20, followed by Y(T), A, AW or AWD

Connector, Model(s) PHB followed by 2 thru 16, followed by Y(T). followed by 2 thru 16, followed by AWD, A, AW

Connector, Model(s) Series 1.25, 1254, 1255 followed by -2 thru -25, followed by Y(T), A or AW

Connector, Model(s) Series 5264 followed by -2 thru -16, followed by Y(T), A or AWD

Connector, Model(s) SM followed by -2 thru -18, followed by Y(T) or A(T)

Connector, Model(s) VH, 3.96 followed by -2 thru -16, followed by Y(T), A, AW or AWG

Connector, Model(s) XA-LHE f/b 2, f/b 1 thru 12, f/b Y(T), XA-LHE followed by 2 thru 12, followed by A(T)

Connector, Model(s) XA-LHE followed by 2 thru 12, followed by A2 or AW

Connector, Model(s) XA-LHE followed by 2 thru 12, followed by Y(T)

Connector, Model(s) XA-LHE followed by 2, followed by 1 thru 12, followed by A(T)

Connector, Model(s) XA-LHE followed by 2, followed by 1 thru 12, followed by A2 or AW

Connector, Model(s) XH followed by -2 thru -20, followed by Y(T), A, AW, AWGD, AWD or AWGDJ

Connector, Model(s) ZH followed by 2 thru 16, followed by AWD or A, ZH followed by 2 thru 16, followed by Y(T).

Model(s) 1.25, followed by -2 thru -16, followed by AB or AWB

Model(s) 51146 or FI-S, followed by -2 thru -16, followed by AB or AWB

Model(s) A5001, followed by -2 thru -7, followed by Y, Y(T), AD or AWD

Model(s) B2501-LHE, A2004-LHE, A4203-LHE, PHR-LHE, PHD-LHE, CH2.5-LHE, DF11-LHE, PHSD-LHE, A5001-LHE, 35155-LHE, 35156-LHE, 5195-LHE, 5196-LHE, followed by 2 thru 16, followed by Y(T)

Model(s) BHS-LHE, SMH250-LHE, SMH200-LHE, L6.2-LHE, 1806-LHE, 2060-LHE, 2541-LHE, JC15-LHE, XHD-LHE, followed by -2, followed by A(T), or Y(T)

Model(s) JWPF-LHE, B2541-LHE, NV-LHE, DV-LHE, SGN-LHE, SJN-LHE, SDN-LHE, SIN-LHE, 35150-LHE, 35151-LHE, 35180-LHE, 35182-LHE, 35524-LHE, 35965-LHE, RCY-LHE, LC-LHE, VR-LHE, SHJ-LHE, SHL-LHE, DF19-LHE, ACH-LHE, DF13-LHE, IL-Z-LHE, 51146-LHE, SATA-LHE, XSR-LHE, SUR-LHE, SUH-LHE, ZE-LHE, ZND-LHE, ZPD-LHE, A1502-LHE, SFH-LHE,51004-LHE, PUD-LHE, A20010-LHE, 35507-LHE, DF3-LHE, PND-LHE, RE-LHE,RA-LHE, RF-LHE or A3963, followed by -2 thru -15, followed by Y(T), YB(T) or YC(T), A, A-K, AW, AW-K, AD, AD-K, AWGD, AWGD-K, AQ, AQ-K, AWQ, AWQ-K, AD(BH) or AD(BH)-K.

Model(s) PH, followed by -2 thru -16, followed by AB or AWB

Model(s) PHB, SZN-LHE, SAN-LHE, JC20-LHE, EH-LHE, EI-LHE, EL-LHE, S-EL-LHE, followed by 2 thru 16, followed by AWD, A, AW

Model(s) PHB, SZN-LHE, SAN-LHE, JC20-LHE, EH-LHE, EI-LHE, EL-LHE, S-EL-LHE, followed by 2 thru 16, followed by Y(T)

Model(s) PHB, XH, XHB or XHBD, followed by -2 thru -16, followed by AB or AWB.

Model(s) RAST 5-LHE TAB HEADER ASSY , TH, Vertical, Cat. Nos. 1969738-LHE,1969740-LHE, 1971845-LHE, 1971846-LHE, 1971895-LHE, 1971896-LHE, 1971946-LHE thru 1971949-LHE, 1971954-LHE thru 1971957-LHE, 2232008-LHE thru 2232011-LHE, 2232000-LHE thru 2232003-LHE, 2232016-LHE thru 2232019-LHE, 1971962-LHE thru 1971965-LHE, 2232024-LHE thru 2232027-LHE, 2232289-LHE thru 2232292-LHE, 2232043-LHE thru 2232074-LHE, 2232298-LHE thru 2232301-LHE, 2232511-LHE, 2232532-LHE, 2232557-LHE, 2232559-LHE, 2232560-LHE, 2232562-LHE, 2232563-LHE, 2232565-LHE, 2232566-LHE, 2232568-LHE, 2232569-LHE, 2232571-LHE, 2232572-LHE, 2232574-LHE, 2232575-LHE, 2232577-LHE, 2232578-LHE, 2232580-LHE, 2232581-LHE, 2232583-LHE, 2232584-LHE, 2232586-LHE, 2232587-LHE, 2232589-LHE, 2232590-LHE, 2232592-LHE, 2232593-LHE, 2232595-LHE, 2232596-LHE, 2232598-LHE, 2232599-LHE, 2232601-LHE, 2232602-LHE, 2232604-LHE, 2232605-LHE, 2232607-LHE, 2232608-LHE, 2232611-LHE thru 2232682-LHE, 2292457-LHE, 2292458-LHE, may incorporate prefix and/or suffix number.), followed by -2 thru -7, followed by Y, Y(T), AD or AWD.

Model(s) SY, followed by -2, followed by Y, Y(T), A or A(T)

Model(s) SYP, SYR, BH4.0-LHE, A10001-LHE, A7501-LHE, A8001-LHE, C2541-LHE, C2542-LHE, D250R-LHE, D280K-LHE, D300R-LHE, D350R-LHE, D400B-LHE, D430R-LHE, D470G-LHE, D480J-LHE, D480K-LHE, D480N-LHE, D480Q-LHE, D520H-LHE, D520K-LHE, D520Q-LHE, D620G-LHE, D630J-LHE, D630N-LHE, D630Q-LHE, D700G-LHE, F001-LHE, F002-LHE, HIF3-LHE, MC100-LHE, MC100-LHE, ME020-LHE, ME010-LHE, F2541-LHE, D2301-LHE, 1719057-LHE, 1719059-1-LHE, P0011-LHE, P0012-LHE, P0013-LHE, C6001-LHE, D2201-LHE, D2202-LHE or P0001-LHE, followed by -2, followed by Y, Y(T), A or A(T).

Model(s) VL-LHE , YL-LHE, SL-LHE, FL-LHE, YHD200-LHE, HA-LHE, LGC-LHE, JR-LHE, SP-LHE, 5025-LHE, followed by 2, followed by 1 thru 12, followed by A(T), Y(T), A2 or AW

Model(s) VL-LHE, YL-LHE, SL-LHE, FL-LHE, YHD200-LHE, HA-LHE, LGC-LHE, JR-LHE, SP-LHE, 5025-LHE, followed by 2 thru 12, followed by A(T), Y(T), A2 or AW

Model(s) XHD, XHE or XHQ, followed by -2 thru -15, followed by Y(T), YB(T) or YC(T), A, A-K, AW, AW-K, AD, AD-K, AWGD, AWGD-K, AQ, AQ-K, AWQ, AWQ-K, AD(BH) or AD(BH)-K.

Model(s) ZH, followed by -2 thru -16, followed by AB or AWB

Model(s) ZHR-LHE, SH-LHE, GH-LHE, NH-LHE, C1251-LHE, DF14-LHE, 5501-LHE, 75416-LHE, 543-LHE, followed by 2 thru 16, followed by AWD or A

Model(s) ZHR-LHE, SH-LHE, GH-LHE, NH-LHE, C1251-LHE, DF14-LHE, 5501-LHE, 75416-LHE, 543-LHE, followed by 2 thru 16, followed by Y(T)

Marking: Company name or trademark LHE, model designation and the Recognized Component Mark, on the device or carton.

Last Updated on 2020-02-20

并不是所有出现在本数据库中的公司名称和产品都满足了UL 跟踪检验服务的要求。只有带有 UL 标志的产品，才应该被视为经过UL认证，并满足UL 跟踪检验服务的要求。注意查看产品上的标志。

UL 允许在线认证目录中所含材料的复制遵循以下条件：1.指南信息、装配、构造、设计、系统和/或认证（文件）必须在不篡改任何数据（或图纸）的情况下完整且无误导性地呈现。2.“经 UL 允许从在线认证目录转载”声明必须出现在所摘取材料的邻近位置。此外，转载材料必须包含以下格式的版权声明： "© 2020 UL LLC"

产品认证证书

证书编号：CQC17134174484

申请人名称及地址

浙江联和电子有限公司

浙江省乐清市乐清湾港区乐商创业园

制造商名称及地址

浙江联和电子有限公司

浙江省乐清市乐清湾港区乐商创业园

生产企业名称及地址

浙江联和电子有限公司(V028069)

浙江省乐清市乐清湾港区创新路8号

产品名称和系列、规格、型号

连接器聚酰胺66(PA66)

型号见附件，材料名称：聚酰胺（PA66），材料牌号：A63RV0，全色， 球压:200℃，灼热丝可燃性指数(GWFI):960/0.3，灼热丝起燃温度(GWIT):960/0.3，燃烧等级:V-0@0.3mm,CTI600，红外光谱,差示扫描量热和热重分析见报告V-00601-2017134003019.

产品标准和技术要求

GB/T5169.21-2017，GB/T 5169.12-2013，GB/T 5169.13-2013，GB/T 5169.16-2017，GB/T 4207-2012，GB/T 6040-2002，GB/T 19466.1-2004，GB/T 19466.2-2004，GB/T 19466.3-2004，ISO 11358-1:2014

认证模式

产品检测+获证后监督

上述产品符合CQC13-036047-2009认证规则的要求，特发此证。

发证日期：2019年03月22日

本证书的有效性依据发证机构的定期监督获得保持。

本证书为变更证书，证书首次颁发日期：2017年07月27日

主任：陈柏

中国质量认证中心 CHINA QUALITY CERTIFICATION CENTRE

中国质量认证中心

中国．北京．南四环西路188号9区 100070

http://www.cqc.com.cn

C 0144189

Verification No.: CLZJ1411264692

VERIFICATION OF LVD COMPLIANCE

Applicant:	Zhejiang Lianhe Electrical Co., Ltd. Houyu village, Shifan town, Yueqing city, Zhejiang province, China.
Manufacturer:	Same as applicant
Product Description:	Connector Terminal
Model No:	A1001, A1002, A1003, A1251, A1252, A1253, A1254, A1255, A1256, A1257, A1501, A1502, A1503, A2001, A2002, A2003, A2004, A2005, A2006, A2007, A2501, A2502, A2503, A2504, A2505, A2505, A2506, A2507, A2541, A2542, A2543, A2544, A2545, A3961, A3962, A3963, A3564, A5081, A5082, B1501, B1502, B2001, B2002, B2501, B2502, C01581, C01582, C1251, C2001, C2002, C2501, C2502, C2505, C2506, C3001, C3002, C3003, C3004, C3005, C3006, C3501, C3502, C3701, C3702, C4001, C4002, C4141, C4142, C4201, C4202, C4203, C4204, C4601, C4602, C4501, C4502, C4503, C4504, C5001, C5002, C5031, C5032, C6201, C6202, C6351, C6352, C6701, C6702, D2801, D2802, D2803, D4801, D4802, D4803, D4804, D6301, D6302, D6303

Sufficient samples of the product have been tested and found to be in conformity with

Test Standard:	EN 60320-1:2001/A1:2007 EN 60529:1991/A1:2000
As shown in the Test Report Number(s):	TLZJ1411264692
Date of issue:	November 27, 2014

Conclusion

This Verification of LVD Compliance has been granted to the applicant based on the results of tests, performed by laboratory of Global Testing Services Co., Ltd on sample of the above-mentioned product in accordance with the provisions of the relevant specific standards and the Low Voltage Directive 2014/35/EU. The CE marking as shown below can be affixed, under the responsibility of the manufacturer, after completion of an EC Declaration of Conformity and compliance with all relevant EC Directives. The affixing of the CE marking presumes in addition that conditions the conditions in annexes IIIand IV of the Directive are fulfilled.

Approved by: Hermann Weiher

For and on behalf of
Global Testing Services Co., Ltd

Global Testing Services Co., Ltd
E-mail:info@gts-lab.com http://www.gts-lab.com
Room 1501-1502, No. 520 Yishan Rd., Xuhui District, Shanghai, 200235 China

Copyright of this certificate is owned by Global Testing Services Co., Ltd and may not be reproduced other than in full and with the prior approval of the General Manager.

QUALITY MANAGEMENT SYSTEM CERTIFICATE

Certificate No. 00117Q310977R2S/3302

We hereby certify that

Zhejiang LianHe Electronics Co., Ltd.

Unified Social Credit Code/ Organization Code certificate: 913303825540033504

Registration Address: Houyu Village, Shifan Town, Yueqing City, Wenzhou City, Zhejiang Province, China

Production Address: Yueshang Pioneer Park, Yueqing Bay Port Area, Yueqing City, Wenzhou City, Zhejiang Province China

by reason of its

Quality Management System

has been awarded this certificate for compliance with the standard

GB/T 19001-2016 / ISO 9001:2015

The Quality Management System Applies in the following area:

The Design, Production of Electronics Connector

Certified since: February 13, 2012 Valid from: December 11, 2017 Valid until: December 14, 2020

After a surveillance cycle, the certificate is valid only when used together with an Acceptance Notice of Surveillance Audit issued by CQC.
Please access www.cqc.com.cn for checking validity of the certificate.
This certificate and its relevant information can query in the website of Certification and Accreditation Administration of the People's Republic of China (www.cnca.gov.cn).

中国认可
国际互认
管理体系
MANAGEMENT SYSTEM
CNAS C001-M

Signed by: Wang Kejiao

CHINA QUALITY CERTIFICATION CENTRE

Section 9, No.188, Nansihuan(the South Fourth Ring Road) Xilu(West Road), Beijing 100070,China

http://www.cqc.com.cn

Q 0073728

2015年版

THE INTERNATIONAL CERTIFICATION NETWORK

CERTIFICATE

IQNet and
CQC
hereby certify that the organization

Zhejiang LianHe Electronics Co., Ltd.

Registration Address: Houyu Village, Shifan Town, Yueqing City, Wenzhou City, Zhejiang Province, China
Production Address: Yueshang Pioneer Park, Yueqing Bay Port Area, Yueqing City, Wenzhou City, Zhejiang Province China

For the following field of activities

The Design, Production of Electronics Connector

Has implemented and maintains a
Management System
Which fulfils the requirements of the following standard

GB/T 19001-2016 / ISO 9001:2015

Issued on: December 11, 2017

Validity date: December 14, 2020

Registration Number: 00117Q310977R2S/3302

Michael Drechsel
President of IQNet

Wang Kejiao
President of CQC

IQNet Partners*:
AENOR *Spain* AFNOR Certification *France* AIB-Vinçotte International *Belgium* ANCE-SIGE *Mexico* APCER *Portugal* CCC *Cyprus*
CISQ *Italy* CQC *China* CQM *China* CQS *Czech Republic* Cro Cert *Croatia* DQS Holding GmbH *Germany*
FCAV *Brazil* FONDONORMA *Venezuela* ICONTEC *Colombia* IMNC *Mexico* Inspecta Certification *Finland* IRAM *Argentina*
JQA *Japan* KFQ *Korea* MIRTEC *Greece* MSZT *Hungary* Nemko AS *Norway* NSAI *Ireland* PCBC *Poland*
Quality Austria *Austria* RR *Russia* SII *Israel* SIQ *Slovenia* SIRIM QAS International *Malaysia*
SQS *Switzerland* SRAC *Romania* TEST St Petersburg *Russia* TSE *Turkey* YUQS *Serbia*
IQNet is represented in the USA by: AFNOR Certification, CISQ, DQS Holding GmbH and NSAI Inc.
* The list of IQNet partners is valid at the time of issue of this certificate. Updated information is available under www.iqnet-certification.com

检测报告

编号：SHAEC24005901604　　**日期：**2024 年 04 月 18 日　　第 1 页，共 11 页

客户名称：　浙江联和电子有限公司

客户地址：　浙江省乐清市乐清湾港区乐商创业园
浙江省乐清市乐清湾港区电子信息产业园红旗路 8 号

样品名称：　PA66 连接器

型号：　XHD-5A

客户参考信息：　见附件

以上样品及信息由客户提供。

SGS 工作编号：　TIC10202403261730301GRQ

样品接收时间：　2024 年 04 月 02 日

检测周期：　2024 年 04 月 02 日 ~ 2024 年 04 月 15 日

检测要求：　根据客户要求检测。

检测方法：　见后续页。

检测结果：　见后续页。

检测要求	结论
欧盟 RoHS 指令 2011/65/EU 附录 II 的修正指令(EU) 2015/863-铅、汞、镉、六价铬、多溴联苯 (PBB)、多溴二苯醚 (PBDE)、邻苯二甲酸二(2-乙基已基)酯 (DEHP)、邻苯二甲酸丁苄酯 (BBP)、邻苯二甲酸二丁酯 (DBP)和邻苯二甲酸二异丁酯 (DIBP)	符合
欧盟 RoHS 指令 2011/65/EU 附录 II 的修正指令(EU) 2015/863-铅、汞、镉和六价铬	符合

通标标准技术服务（上海）有限公司
授权签名

Jenny Lan 兰柳珍
批准签署人

scan to see the report
67D0D105

Unless otherwise agreed in writing, this document is issued by the Company subject to its General Conditions of Service printed overleaf, available on request or accessible at http://www.sgs.com/en/Terms-and-Conditions.aspx and, for electronic format documents, subject to Terms and Conditions for Electronic Documents at http://www.sgs.com/en/Terms-and-Conditions/Terms-e-Document.aspx. Attention is drawn to the limitation of liability, indemnification and jurisdiction issues defined therein. Any holder of this document is advised that information contained hereon reflects the Company's findings at the time of its intervention only and within the limits of Client's instructions, if any. The Company's sole responsibility is to its Client and this document does not exonerate parties to a transaction from exercising all their rights and obligations under the transaction documents. This document cannot be reproduced except in full, without prior written approval of the Company. Any unauthorized alteration, forgery or falsification of the content or appearance of this document is unlawful and offenders may be prosecuted to the fullest extent of the law. Unless otherwise stated the results shown in this test report refer only to the sample(s) tested .
Attention: To check the authenticity of testing /inspection report & certificate, please contact us at telephone: (86-755) 8307 1443, or email: CN.Doccheck@sgs.com

3rd Building,No.889 Yishan Road Xuhui District,Shanghai China 200233　t E&E (86-21) 61402553　f E&E (86-21)64953679　www.sgsgroup.com.cn
中国 · 上海 · 徐汇区宜山路889号3号楼　邮编: 200233　t HL (86-21) 61402594　f HL (86-21)61156899　e sgs.china@sgs.com

Member of the SGS Group (SGS SA)

检测结果：

检测部件外观描述:

样品序号	样品编号	SGS 样品 ID	样品描述
SN1	A1	SHA24-0059016-0001.C001	白色塑料部分
SN2	A2	SHA24-0059016-0001.C002	银色金属

备注：

(1) 1 mg/kg = 1 ppm = 0.0001%
(2) MDL= 方法检测限
(3) ND = 未检出(< MDL)
(4) "-" = 未规定

欧盟 RoHS 指令 2011/65/EU 附录 II 的修正指令(EU) 2015/863-铅、汞、镉、六价铬、多溴联苯 (PBB)、多溴二苯醚 (PBDE)、邻苯二甲酸二(2-乙基已基)酯 (DEHP)、邻苯二甲酸丁苄酯 (BBP)、邻苯二甲酸二丁酯 (DBP)和邻苯二甲酸二异丁酯 (DIBP)

检测方法： 参考 IEC 62321-4:2013+AMD1:2017，IEC 62321-5:2013，IEC 62321-7-2:2017，IEC 62321-6:2015 和 IEC 62321-8:2017，采用 ICP-OES/AAS，UV-Vis 和 GC-MS 进行分析。

检测项目	限值	单位	MDL	A1
铅 (Pb)	1000	mg/kg	2	ND
汞 (Hg)	1000	mg/kg	2	ND
镉 (Cd)	100	mg/kg	2	ND
六价铬 (Cr(VI))	1000	mg/kg	8	ND
多溴联苯之和 (PBB)	1000	mg/kg	-	ND
一溴联苯 (MonoBB)	-	mg/kg	5	ND
二溴联苯 (DiBB)	-	mg/kg	5	ND
三溴联苯 (TriBB)	-	mg/kg	5	ND
四溴联苯 (TetraBB)	-	mg/kg	5	ND
五溴联苯 (PentaBB)	-	mg/kg	5	ND
六溴联苯 (HexaBB)	-	mg/kg	5	ND
七溴联苯 (HeptaBB)	-	mg/kg	5	ND
八溴联苯 (OctaBB)	-	mg/kg	5	ND
九溴联苯 (NonaBB)	-	mg/kg	5	ND
十溴联苯 (DecaBB)	-	mg/kg	5	ND
多溴二苯醚之和 (PBDE)	1000	mg/kg	-	ND
一溴二苯醚 (MonoBDE)	-	mg/kg	5	ND
二溴二苯醚 (DiBDE)	-	mg/kg	5	ND
三溴二苯醚 (TriBDE)	-	mg/kg	5	ND
四溴二苯醚 (TetraBDE)	-	mg/kg	5	ND
五溴二苯醚 (PentaBDE)	-	mg/kg	5	ND
六溴二苯醚 (HexaBDE)	-	mg/kg	5	ND

Unless otherwise agreed in writing, this document is issued by the Company subject to its General Conditions of Service printed overleaf, available on request or accessible at http://www.sgs.com/en/Terms-and-Conditions.aspx and, for electronic format documents, subject to Terms and Conditions for Electronic Documents at http://www.sgs.com/en/Terms-and-Conditions/Terms-e-Document.aspx. Attention is drawn to the limitation of liability, indemnification and jurisdiction issues defined therein. Any holder of this document is advised that information contained hereon reflects the Company's findings at the time of its intervention only and within the limits of Client's instructions, if any. The Company's sole responsibility is to its Client and this document does not exonerate parties to a transaction from exercising all their rights and obligations under the transaction documents. This document cannot be reproduced except in full, without prior written approval of the Company. Any unauthorized alteration, forgery or falsification of the content or appearance of this document is unlawful and offenders may be prosecuted to the fullest extent of the law. Unless otherwise stated the results shown in this test report refer only to the sample(s) tested.
Attention: To check the authenticity of testing /inspection report & certificate, please contact us at telephone: (86-755) 8307 1443, or email: CN.Doccheck@sgs.com
检验检测专用章 Inspection & Testing Services
SGS-CSTC Standards Technical Services (Shanghai) Co., Ltd. Testing Center-Chemical Laboratory
3rd Building,No.889 Yishan Road Xuhui District,Shanghai China 200233 t E&E (86-21) 61402553 f E&E (86-21)64953679 www.sgsgroup.com.cn
中国·上海·徐汇区宜山路889号3号楼 邮编: 200233 t HL (86-21) 61402594 f HL (86-21)61156899 e sgs.china@sgs.com
Member of the SGS Group (SGS SA)

检测项目	限值	单位	MDL	A1
七溴二苯醚 (HeptaBDE)	-	mg/kg	5	ND
八溴二苯醚 (OctaBDE)	-	mg/kg	5	ND
九溴二苯醚 (NonaBDE)	-	mg/kg	5	ND
十溴二苯醚 (DecaBDE)	-	mg/kg	5	ND
邻苯二甲酸二(2-乙基己基)酯 (DEHP)	1000	mg/kg	50	ND
邻苯二甲酸丁苄酯 (BBP)	1000	mg/kg	50	ND
邻苯二甲酸二丁酯 (DBP)	1000	mg/kg	50	ND
邻苯二甲酸二异丁酯 (DIBP)	1000	mg/kg	50	ND

备注：
(1) 最大允许极限值引用自 RoHS 指令(EU) 2015/863。
(2) IEC 62321 系列等同于 EN 62321 系列。
(3) 2021 年 7 月 22 号开始，DEHP， BBP， DBP 和 DIBP 的限制适用于医疗器械，包括体外医疗器械，监控仪表，包括工业监测和控制仪器。

欧盟 RoHS 指令 2011/65/EU 附录 II 的修正指令(EU) 2015/863-铅、汞、镉和六价铬

检测方法： 参考 IEC 62321-4:2013+AMD1:2017，IEC 62321-5:2013 和 IEC 62321-7-1:2015，采用 ICP-OES/AAS 和 UV-Vis 进行分析。

检测项目	限值	单位	MDL	A2
铅 (Pb)	1000	mg/kg	2	21
汞 (Hg)	1000	mg/kg	2	ND
镉 (Cd)	100	mg/kg	2	ND
六价铬 (Cr(VI))▼	-	μg/cm²	0.10	ND

备注：
(1) 最大允许极限值引用自RoHS指令(EU) 2015/863。
(2) IEC 62321系列等同于 EN 62321系列。
(3) ▼ = a. 当六价铬的浓度高于0.13 μg/cm²时，样品为阳性，即含有六价铬；
b. 当六价铬的浓度为ND (低于0.10 μg/cm²) 时，样品为阴性，即未检测到六价铬；
c. 当六价铬的浓度介于0.10 μg/cm²与0.13 μg/cm²之间时，无法直接判定是否检测到六价铬，因不同个体的样品表面差异可能会影响测定结果。

由于未获知样品的存储条件和生产日期，样品的六价铬检测结果仅能代表检测时样品含六价铬的状态。

除非另有说明，参照 ILAC-G8:09/2019，使用简单接受（*w*=0）的二元判定规则进行符合性判定。
除非另有说明，此报告结果仅对检测的样品负责。本报告未经本公司书面许可，不可部分复制。

Unless otherwise agreed in writing, this document is issued by the Company subject to its General Conditions of Service printed overleaf, available on request or accessible at http://www.sgs.com/en/Terms-and-Conditions.aspx and, for electronic format documents, subject to Terms and Conditions for Electronic Documents at http://www.sgs.com/en/Terms-and-Conditions/Terms-e-Document.aspx. Attention is drawn to the limitation of liability, indemnification and jurisdiction issues defined therein. Any holder of this document is advised that information contained hereon reflects the Company's findings at the time of its intervention only and within the limits of Client's instructions, if any. The Company's sole responsibility is to its Client and this document does not exonerate parties to a transaction from exercising all their rights and obligations under the transaction documents. This document cannot be reproduced except in full, without prior written approval of the Company. Any unauthorized alteration, forgery or falsification of the content or appearance of this document is unlawful and offenders may be prosecuted to the fullest extent of the law. Unless otherwise stated the results shown in this test report refer only to the sample(s) tested.
Attention: To check the authenticity of testing /inspection report & certificate, please contact us at telephone: (86-755) 8307 1443, or email: CN.Doccheck@sgs.com
检验检测专用章 Inspection & Testing Services
SGS-CSTC Standards Technical Services (Shanghai) Co., Ltd. Testing Center-Chemical Laboratory
3rd Building,No.889 Yishan Road Xuhui District,Shanghai China 200233 t E&E (86-21) 61402553 f E&E (86-21)64953679 www.sgsgroup.com.cn
中国·上海·徐汇区宜山路889号3号楼 邮编: 200233 t HL (86-21) 61402594 f HL (86-21)61156899 e sgs.china@sgs.com
Member of the SGS Group (SGS SA)

附件

元素检测流程图

样品按照下述流程被完全消解

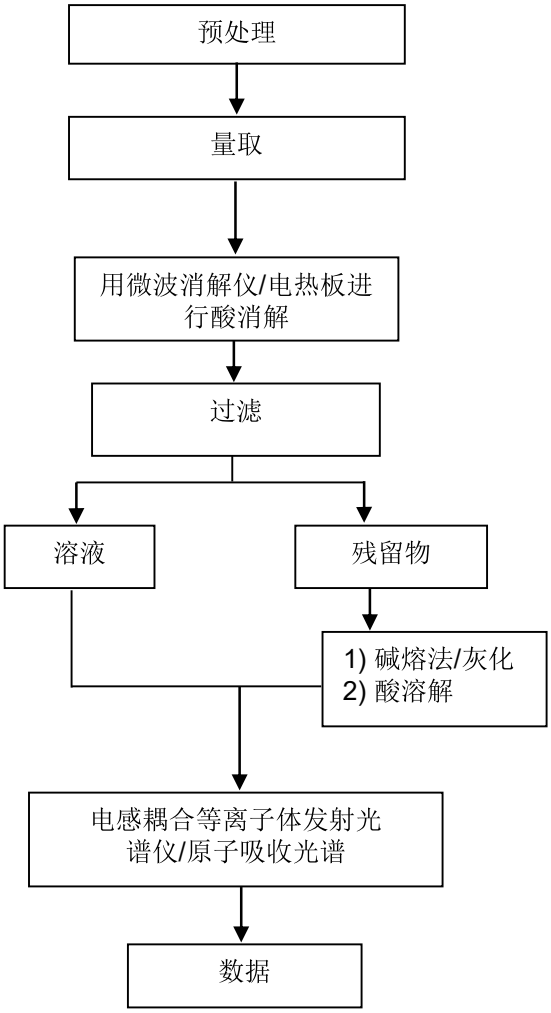

Unless otherwise agreed in writing, this document is issued by the Company subject to its General Conditions of Service printed overleaf, available on request or accessible at http://www.sgs.com/en/Terms-and-Conditions.aspx and, for electronic format documents, subject to Terms and Conditions for Electronic Documents at http://www.sgs.com/en/Terms-and-Conditions/Terms-e-Document.aspx. Attention is drawn to the limitation of liability, indemnification and jurisdiction issues defined therein. Any holder of this document is advised that information contained hereon reflects the Company's findings at the time of its intervention only and within the limits of Client's instructions, if any. The Company's sole responsibility is to its Client and this document does not exonerate parties to a transaction from exercising all their rights and obligations under the transaction documents. This document cannot be reproduced except in full, without prior written approval of the Company. Any unauthorized alteration, forgery or falsification of the content or appearance of this document is unlawful and offenders may be prosecuted to the fullest extent of the law. Unless otherwise stated the results shown in this test report refer only to the sample(s) tested .
Attention: To check the authenticity of testing /inspection report & certificate, please contact us at telephone: (86-755) 8307 1443, or email: CN.Doccheck@sgs.com
3rd Building,No.889 Yishan Road Xuhui District,Shanghai China 200233 t E&E (86-21) 61402553 f E&E (86-21)64953679 www.sgsgroup.com.cn
中国·上海·徐汇区宜山路889号3号楼 邮编: 200233 t HL (86-21) 61402594 f HL (86-21)61156899 e sgs.china@sgs.com
Member of the SGS Group (SGS SA)

附件

六价铬检测流程图

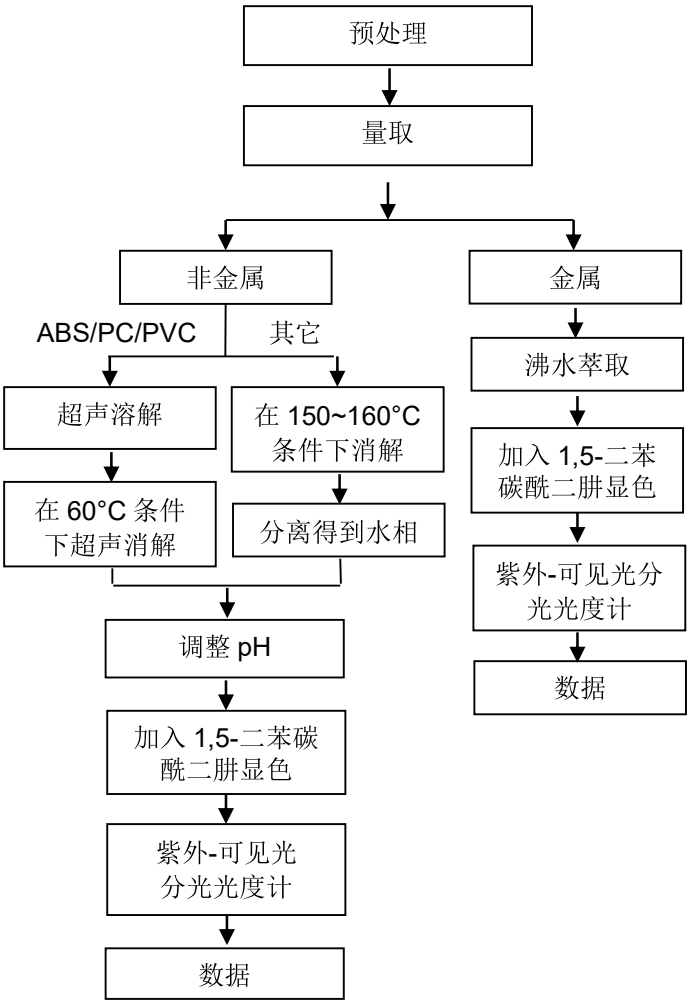

Unless otherwise agreed in writing, this document is issued by the Company subject to its General Conditions of Service printed overleaf, available on request or accessible at http://www.sgs.com/en/Terms-and-Conditions.aspx and, for electronic format documents, subject to Terms and Conditions for Electronic Documents at http://www.sgs.com/en/Terms-and-Conditions/Terms-e-Document.aspx. Attention is drawn to the limitation of liability, indemnification and jurisdiction issues defined therein. Any holder of this document is advised that information contained hereon reflects the Company's findings at the time of its intervention only and within the limits of Client's instructions, if any. The Company's sole responsibility is to its Client and this document does not exonerate parties to a transaction from exercising all their rights and obligations under the transaction documents. This document cannot be reproduced except in full, without prior written approval of the Company. Any unauthorized alteration, forgery or falsification of the content or appearance of this document is unlawful and offenders may be prosecuted to the fullest extent of the law. Unless otherwise stated the results shown in this test report refer only to the sample(s) tested.
Attention: To check the authenticity of testing /inspection report & certificate, please contact us at telephone: (86-755) 8307 1443, or email: CN.Doccheck@sgs.com
3rd Building,No.889 Yishan Road Xuhui District,Shanghai China 200233 t E&E (86–21) 61402553 f E&E (86–21)64953679 www.sgsgroup.com.cn
中国·上海·徐汇区宜山路889号3号楼 邮编: 200233 t HL (86–21) 61402594 f HL (86–21)61156899 e sgs.china@sgs.com
Member of the SGS Group (SGS SA)

附件

PBB/PBDE 检测流程图

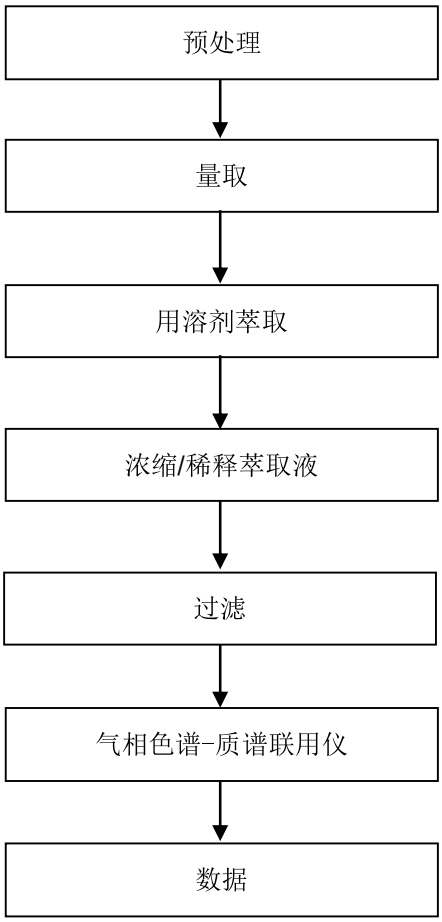

Unless otherwise agreed in writing, this document is issued by the Company subject to its General Conditions of Service printed overleaf, available on request or accessible at http://www.sgs.com/en/Terms-and-Conditions.aspx and, for electronic format documents, subject to Terms and Conditions for Electronic Documents at http://www.sgs.com/en/Terms-and-Conditions/Terms-e-Document.aspx. Attention is drawn to the limitation of liability, indemnification and jurisdiction issues defined therein. Any holder of this document is advised that information contained hereon reflects the Company's findings at the time of its intervention only and within the limits of Client's instructions, if any. The Company's sole responsibility is to its Client and this document does not exonerate parties to a transaction from exercising all their rights and obligations under the transaction documents. This document cannot be reproduced except in full, without prior written approval of the Company. Any unauthorized alteration, forgery or falsification of the content or appearance of this document is unlawful and offenders may be prosecuted to the fullest extent of the law. Unless otherwise stated the results shown in this test report refer only to the sample(s) tested.
Attention: To check the authenticity of testing /inspection report & certificate, please contact us at telephone: (86-755) 8307 1443, or email: CN.Doccheck@sgs.com
3rd Building,No.889 Yishan Road Xuhui District,Shanghai China 200233 t E&E (86-21) 61402553 f E&E (86-21)64953679 www.sgsgroup.com.cn
中国·上海·徐汇区宜山路889号3号楼 邮编: 200233 t HL (86-21) 61402594 f HL (86-21)61156899 e sgs.china@sgs.com
Member of the SGS Group (SGS SA)

附件

Phthalates 检测流程图

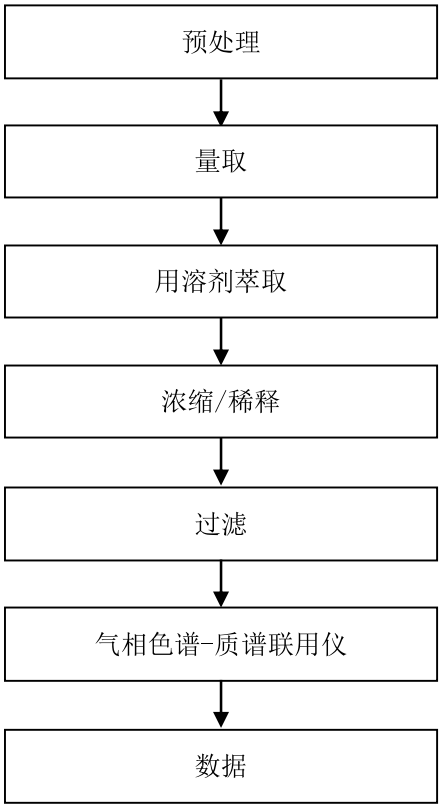

Unless otherwise agreed in writing, this document is issued by the Company subject to its General Conditions of Service printed overleaf, available on request or accessible at http://www.sgs.com/en/Terms-and-Conditions.aspx and, for electronic format documents, subject to Terms and Conditions for Electronic Documents at http://www.sgs.com/en/Terms-and-Conditions/Terms-e-Document.aspx. Attention is drawn to the limitation of liability, indemnification and jurisdiction issues defined therein. Any holder of this document is advised that information contained hereon reflects the Company's findings at the time of its intervention only and within the limits of Client's instructions, if any. The Company's sole responsibility is to its Client and this document does not exonerate parties to a transaction from exercising all their rights and obligations under the transaction documents. This document cannot be reproduced except in full, without prior written approval of the Company. Any unauthorized alteration, forgery or falsification of the content or appearance of this document is unlawful and offenders may be prosecuted to the fullest extent of the law. Unless otherwise stated the results shown in this test report refer only to the sample(s) tested .
Attention: To check the authenticity of testing /inspection report & certificate, please contact us at telephone: (86-755) 8307 1443, or email: CN.Doccheck@sgs.com
3rd Building,No.889 Yishan Road Xuhui District,Shanghai China 200233 t E&E (86-21) 61402553 f E&E (86-21)64953679 www.sgsgroup.com.cn
中国·上海·徐汇区宜山路889号3号楼 邮编: 200233 t HL (86-21) 61402594 f HL (86-21)61156899 e sgs.china@sgs.com
Member of the SGS Group (SGS SA)

附件：
1.0， SH， SHD， 1.25， 51021， DF14， DF13， GH， ZH， PH， PHB， PA， PHSD， DF11， C1251， 51047， 51146， FI-S， PHD， YHD200， PA， SMP，SMW，SMH， SMH200， SMH200-H， YH200，20039WR， 杜邦 2.0， XH/TJC3， XA， HA， XHB， XHD， XHE， EH， EI， 小四 P， 5263， 5264，5267，5268， SZN， SAN， SCN， SCND， JC15， JC20， JC25， 5102， 5240， SMH250， SMP250， SMW250， 25048HS， 25045HP， SM， TJC8, 杜邦 2.54， TJC8A，杜邦带锁， TJC8B， TJC8H， 5051，2510， 美尚美， 43640， 43645， 43020， 43025， 5500， 5600， VH， VHRR， YH396， VHR， 35156， 2139， 3.96， 90331， 5195， 5196， 39612， FL， 5557， 5559， 5566， 5569， SL，RV42， EL， YL， 小 EL， 8981， 大四 P， 5058， 5.08， L6.2， VL， VLP/VLR， TJC2， TJC2A， TJC2B， TJC4， TJC1， 1806， MX3.0， 1.58， 51005， 51006， BH3.5， BH4.0， 63080， 51004， TJC15， A4203， CL014， OTP， MKH， SMF， Cy-X201， 35108， 35150， 35151， 35224， 35180， 35965， 42021， 42022， 42002， 35955， SA， SCS， 35189， 35196， CH10， CH2.5， 543， SLP， SLR， YHL500， YWL500， FFC， FPC， 20030， 250， LGC， S11， YH025， 35155， 25415， 5197， 5198， 110， 2.8， 6.3， SCS

NH， XHQ， 42474， 42475， QH， NV， 50300， 50301， 5025， 3191， 5199， STV5， YHL500， YWL500， F001， F002， D440， D600， D620， D700， D220， D230， D250， D480， D520， D280， D630， D430， D400， D450， U-T， F1001-T， SIN-T， 774， 773， 778， 294， TU-JTK(SV)， TU(SNB)， TO-JTK(RV)， MDD， FDD， TG-JT， IDC， AUTO， CONNECTOR， DJ70， DT04， DT06， UY/K1， UY2/K2， UR/K3， UR2， UB/K4， UB2A， UG/K5， U1R/K8， U1B/K9， HJKT10， UDW2， 314， A5001， A5002， MC100， FPC2.54， SGN， PHR， ZHR， 205， 5.2， C1801， C1802， 2060， A5003， ME020， ME010， FPC/FFC， B2541， 1971845， 1971846， 2232043， 2232044， 2232511， 1971895， 1971896， JWPF， SY， Molex1.5， ME0100， RAST， A5004， DV， SJN， SDN， 35182， 35524， RCY， LC， VR， SHJ， SHL， DF19， ACH， IL-Z， SATA， XSR， SUR， SUH， ZE， ZND， ZPD， SFH， PUD， AMP2.0， 35507， DF3， PND， RE， RA， RF， SYP/SYR， HIF3， MC100/ME020/ME010， F2541， VHB， VHC， VHD
SHB1.0, NHB1.0, FIS, VHE, 35313, 30PIN, PR9-409, PR5-70-1, PR5-24, 5240B, 5500B, 5600B,13006,13007, 3DLG06FW, 1719057, 1719058, 1719059, CS28H, 9102501, 9103101, 9111001, PP0311401, 33EMMT26FBK, 3CN2BH02, 3FW06FBM, PP0426613, PP0426202, GIC3.3, 1376421-1, XADR, XADRR, 179846, 179849, XHR, 50235, PAD, PNI, SDL2.5, PS-250-2A-15, 4.8, 62306, H9002, DC4235, 62308, 62420-1, B35E0, 63658-1, 1060-16-0122, RH0409000142, RH011810030061, RH040499000142, RH011810030090, 299900421692, 33146412, 1.25 插板, SPS-01T-110, 282104-1, 282105-1, 282110-1, 282109-1, 21T1000501, 20T1001001, PP043531T, XNIRP, XL, 1123343-1, DF16, 1473413-1, 12147302, MG641234-5, PHBS,0.8, Molex1.2, 35746, 35748, APM2.54

1969738, 1969740, 1971845, 1971846, 1971895, 1971896, 1971946 thru 1971949, 1971954 thru 1971957, 2232008 thru 2232011, 2232000 thru 2232003, 2232016 thru 2232019, 1971962 thru 1971965, 2232024 thru 2232027, 2232289 thru 2232292, 2232043 thru 2232074, 2232298 thru 2232301, 2232511, 2232532, 2232557, 2232559, 2232560, 2232562, 2232563, 2232565, 2232566, 2232568, 2232569, 2232571, 2232572, 2232574, 2232575, 2232577, 2232578, 2232580, 2232581, 2232583, 2232584, 2232586, 2232587, 2232589, 2232590, 2232592, 2232593, 2232595, 2232596, 2232598, 2232599, 2232601, 2232602, 2232604, 2232605, 2232607, 2232608, 2232611 thru 2232682, 2292457, 2292458, 1064,2064,3064,1080,2080,3080,1100,2100,3100,1120, 2120,3120,1150,2150,3150, 1180,2180,3180,1230,2230, 3230,1250,2250,3250,1280,2280,3280,1300,2300,3300, 1480,2480,3480, 1630,2630,3630,1780,2780,3780,1950, 2950,3950,1010,2010,3010,1013,2013,3013,1015,2015, 3015, 1016,2016,3016,1025,2025,3025,1035,2035,3035, 1045,2045,3045,1058,2058,3058,1999,2999,3999, 401,402,403,503,TPA,BX,CPA, 404, 501, 502
A1001 A1002 A1003 A1004 A1005 A1006 A1007 A1008 A1009

Unless otherwise agreed in writing, this document is issued by the Company subject to its General Conditions of Service printed overleaf, available on request or accessible at http://www.sgs.com/en/Terms-and-Conditions.aspx and, for electronic format documents, subject to Terms and Conditions for Electronic Documents at http://www.sgs.com/en/Terms-and-Conditions/Terms-e-Document.aspx. Attention is drawn to the limitation of liability, indemnification and jurisdiction issues defined therein. Any holder of this document is advised that information contained hereon reflects the Company's findings at the time of its intervention only and within the limits of Client's instructions, if any. The Company's sole responsibility is to its Client and this document does not exonerate parties to a transaction from exercising all their rights and obligations under the transaction documents. This document cannot be reproduced except in full, without prior written approval of the Company. Any unauthorized alteration, forgery or falsification of the content or appearance of this document is unlawful and offenders may be prosecuted to the fullest extent of the law. Unless otherwise stated the results shown in this test report refer only to the sample(s) tested.
Attention: To check the authenticity of testing /inspection report & certificate, please contact us at telephone: (86-755) 8307 1443, or email: CN.Doccheck@sgs.com
检验检测专用章 Inspection & Testing Services
SGS-CSTC Standards Technical Services (Shanghai) Co., Ltd. Testing Center-Chemical Laboratory
3rd Building,No.889 Yishan Road Xuhui District,Shanghai China 200233 t E&E (86-21) 61402553 f E&E (86-21)64953679 www.sgsgroup.com.cn
中国·上海·徐汇区宜山路889号3号楼 邮编: 200233 t HL (86-21) 61402594 f HL (86-21)61156899 e sgs.china@sgs.com
Member of the SGS Group (SGS SA)

A1251	A1252	A1253	A1254	A1255	A1256	A1257	A1258	A1259
A1501	A1502	A1503	A1504	A1505	A1506	A1507	A1508	A1509
A2001	A2002	A2003	A2004	A2005	A2006	A2007	A2008	A2009
A2010	A2011	A2012	A2013	A2014	A2015	A2016	A2017	A2018
A2501	A2502	A2503	A2504	A2505	A2506	A2507	A2508	A2509
A25010	A25011	A25012	A25013	A25014	A25015	A25016	A25017	A25018
A2541	A2542	A2543	A2544	A2545	A2546	A2547	A2548	A2549
A3001	A3002	A3003	A3004	A3005	A3006	A3007	A3008	A3009
A3301	A3302	A3303	A3304	A3305	A3306	A3307	A3308	A3309
A3961	A3962	A3963	A3964	A3965	A3966	A3967	A3968	A3969
A4201	A4202	A4203	A4204	A4205	A4206	A4207	A4208	A4209
A5001	A5002	A5003	A5004	A5005	A5006	A5007	A5008	A5009
A5081	A5082	A5083	A5084	A5085	A5086	A5087	A5088	A5089
A6501	A6502	A6503	A6504	A6505	A6506	A6507	A6508	A6509
B1251	B1252	B1253	B1254	B1255	B1256	B1257	B1258	B1259
B1501	B1502	B1503	B1504	B1505	B1506	B1507	B1508	B1509
B2001	B2002	B2003	B2004	B2005	B2006	B2007	B2008	B2009
B2501	B2502	B2503	B2504	B2505	B2506	B2507	B2508	B2509
B2541	B2542	B2543	B2544	B2545	B2546	B2547	B2548	B2549
B76201	B76202	B76203	B76204	B76205	B76206	B76207	B76208	B76209
B13001	B13002	B13003	B13004	B13005	B13006	B13007	B13008	B13009
C01581	C01582	C01583	C01584	C01585	C01586	C01587	C01588	C01589
C1251	C1252	C1253	C1254	C1255	C1256	C1257	C1258	C1259
C1501	C1502	C1503	C1504	C1505	C1506	C1507	C1508	C1509
C2001	C2002	C2003	C2004	C2005	C2006	C2007	C2008	C2009
C2501	C2502	C2503	C2504	C2505	C2506	C2507	C2508	C2509
C25010	C25011	C25012	C25013	C25014	C25015	C25016	C25017	C25018
C2541	C2542	C2543	C2544	C2545	C2546	C2547	C2548	C2549
C3001	C3002	C3003	C3004	C3005	C3006	C3007	C3008	C3009
C3501	C3502	C3503	C3504	C3505	C3506	C3507	C3508	C3509
C3681	C3682	C3683	C3684	C3685	C3686	C3687	C3688	C3689
C3961	C3962	C3963	C3964	C3965	C3966	C3967	C3968	C3969
C4001	C4002	C4003	C4004	C4005	C4006	C4007	C4008	C4009
C4141	C4142	C4143	C4144	C4145	C4146	C4147	C4148	C4149
C4201	C4202	C4203	C4204	C4205	C4206	C4207	C4208	C4209
C4501	C4502	C4503	C4504	C4505	C4506	C4507	C4508	C4509
C5001	C5002	C5003	C5004	C5005	C5006	C5007	C5008	C5009
C6201	C6202	C6203	C6204	C6205	C6206	C6207	C6208	C6209
C6351	C6352	C6353	C6354	C6355	C6356	C6357	C6358	C6359
D2801	D2802	D2803	D2804	D2805	D2806	D2807	D2808	D2809
D4801	D4802	D4803	D4804	D4805	D4806	D4807	D4808	D4809
D5201	D5202	D5203	D5204	D5205	D5206	D5207	D5208	D5209
D6301	D6302	D6303	D6304	D6305	D6306	D6307	D6308	D6309
D6201	D6202	D6203	D6204	D6205	D6206	D6207	D6208	D6209
D7001	D7002	D7003	D7004	D7005	D7006	D7007	D7008	D7009
F0501	F0502	F0503	F0504	F0505	F0506	F0507	F0508	F0509
F05010	F05011	F05012	F05013	F05014	F05015	F05016	F05017	F05018
F1001	F1002	F1003	F1004	F1005	F1006	F1007	F1008	F1009
F10010	F10011	F10012	F10013	F10014	F10015	F10016	F10017	F10018
F2541	F2542	F2543	F2544	F2545	F2546	F2547	F2548	F2549
P0001	P0002	P0003	P0004	P0005	P0006	P0007	P0008	P0009
P0010	P0011	P0012	P0013	P0014	P0015	P0016	P0017	P0018

Unless otherwise agreed in writing, this document is issued by the Company subject to its General Conditions of Service printed overleaf, available on request or accessible at http://www.sgs.com/en/Terms-and-Conditions.aspx and, for electronic format documents, subject to Terms and Conditions for Electronic Documents at http://www.sgs.com/en/Terms-and-Conditions/Terms-e-Document.aspx. Attention is drawn to the limitation of liability, indemnification and jurisdiction issues defined therein. Any holder of this document is advised that information contained hereon reflects the Company's findings at the time of its intervention only and within the limits of Client's instructions, if any. The Company's sole responsibility is to its Client and this document does not exonerate parties to a transaction from exercising all their rights and obligations under the transaction documents. This document cannot be reproduced except in full, without prior written approval of the Company. Any unauthorized alteration, forgery or falsification of the content or appearance of this document is unlawful and offenders may be prosecuted to the fullest extent of the law. Unless otherwise stated the results shown in this test report refer only to the sample(s) tested.
Attention: To check the authenticity of testing /inspection report & certificate, please contact us at telephone: (86-755) 8307 1443, or email: CN.Doccheck@sgs.com
SGS-CSTC Standards Technical Services (Shanghai) Co.,Ltd. Testing Center-Chemical Laboratory
3rd Building,No.889 Yishan Road Xuhui District,Shanghai China 200233 t E&E (86-21) 61402553 f E&E (86-21)64953679 www.sgsgroup.com.cn
中国·上海·徐汇区宜山路889号3号楼 邮编: 200233 t HL (86-21) 61402594 f HL (86-21)61156899 e sgs.china@sgs.com
Member of the SGS Group (SGS SA)

P0019 P0020 P0021 P0022 P0023 P0024 P0025 P0026 P0027
D2301 D2302 D2303 D2304 D2305 D2306 D2307 D2308 D2309
D6001 D6002 D6003 D6004 D6005 D6006 D6007 D6008 D6009
D2201 D2202 D2203 D2204 D2205 D2206 D2207 D2208 D2209
B10901 B13601 C6001 C6002 C6003 C6004 A20010 A20011 P0028
P0029 P0030 P0031 B11001 C2201 C2202 C4101 C6701 C6702
D630J D700G A20012 P0032 B4001 A0801 A1271 A1803
A10001 A4141 A7501 A7502 A3501 A1201 A4001 A6351 B14501
A20013 A1202 D2501 A1801 A1802

Unless otherwise agreed in writing, this document is issued by the Company subject to its General Conditions of Service printed overleaf, available on request or accessible at http://www.sgs.com/en/Terms-and-Conditions.aspx and, for electronic format documents, subject to Terms and Conditions for Electronic Documents at http://www.sgs.com/en/Terms-and-Conditions/Terms-e-Document.aspx. Attention is drawn to the limitation of liability, indemnification and jurisdiction issues defined therein. Any holder of this document is advised that information contained hereon reflects the Company's findings at the time of its intervention only and within the limits of Client's instructions, if any. The Company's sole responsibility is to its Client and this document does not exonerate parties to a transaction from exercising all their rights and obligations under the transaction documents. This document cannot be reproduced except in full, without prior written approval of the Company. Any unauthorized alteration, forgery or falsification of the content or appearance of this document is unlawful and offenders may be prosecuted to the fullest extent of the law. Unless otherwise stated the results shown in this test report refer only to the sample(s) tested .
Attention: To check the authenticity of testing /inspection report & certificate, please contact us at telephone: (86-755) 8307 1443, or email: CN.Doccheck@sgs.com
3rd Building,No.889 Yishan Road Xuhui District,Shanghai China 200233 t E&E (86–21) 61402553 f E&E (86–21)64953679 www.sgsgroup.com.cn
中国·上海·徐汇区宜山路889号3号楼 邮编: 200233 t HL (86–21) 61402594 f HL (86–21)61156899 e sgs.china@sgs.com
Member of the SGS Group (SGS SA)

样品照片：

SHA24-0059016-0001.C001

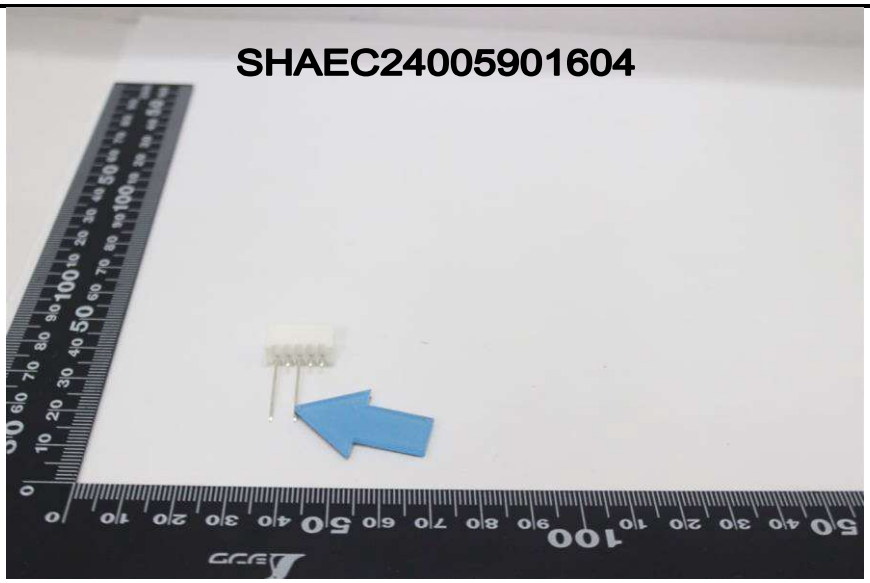

SHA24-0059016-0001.C002

此照片仅限于随 SGS 正本报告使用

报告结束

Unless otherwise agreed in writing, this document is issued by the Company subject to its General Conditions of Service printed overleaf, available on request or accessible at http://www.sgs.com/en/Terms-and-Conditions.aspx and, for electronic format documents, subject to Terms and Conditions for Electronic Documents at http://www.sgs.com/en/Terms-and-Conditions/Terms-e-Document.aspx. Attention is drawn to the limitation of liability, indemnification and jurisdiction issues defined therein. Any holder of this document is advised that information contained hereon reflects the Company's findings at the time of its intervention only and within the limits of Client's instructions, if any. The Company's sole responsibility is to its Client and this document does not exonerate parties to a transaction from exercising all their rights and obligations under the transaction documents. This document cannot be reproduced except in full, without prior written approval of the Company. Any unauthorized alteration, forgery or falsification of the content or appearance of this document is unlawful and offenders may be prosecuted to the fullest extent of the law. Unless otherwise stated the results shown in this test report refer only to the sample(s) tested.
Attention: To check the authenticity of testing /inspection report & certificate, please contact us at telephone: (86-755) 8307 1443, or email: CN.Doccheck@sgs.com
3rd Building,No.889 Yishan Road Xuhui District,Shanghai China 200233 t E&E (86-21) 61402553 f E&E (86-21)64953679 www.sgsgroup.com.cn
中国·上海·徐汇区宜山路889号3号楼 邮编: 200233 t HL (86-21) 61402594 f HL (86-21)61156899 e sgs.china@sgs.com
Member of the SGS Group (SGS SA)

检测报告

编号：SHAEC24008425816　　**日期：**2024 年 05 月 07 日　　第 1 页，共 8 页

客户名称：　浙江联和电子有限公司

客户地址：　浙江省乐清市乐清湾港区乐商创业园
浙江省乐清市乐清湾港区电子信息产业园红旗路 8 号

样品名称：　端子 针

客户参考信息：　见附件

以上样品及信息由客户提供。

SGS 工作编号：　TIC1020240424174615KLN9

样品接收时间：　2024 年 04 月 26 日

检测周期：　2024 年 04 月 26 日 ~ 2024 年 05 月 07 日

检测要求：　根据客户要求检测。

检测方法：　见后续页。

检测结果：　见后续页。

检测要求	结论
欧盟 RoHS 指令 2011/65/EU 附录 II 的修正指令(EU) 2015/863-铅、汞、镉和六价铬	符合

通标标准技术服务（上海）有限公司
授权签名

胡敏

Dora Hu 胡敏
批准签署人

scan to see the report
F5FAA78D

Unless otherwise agreed in writing, this document is issued by the Company subject to its General Conditions of Service printed overleaf, available on request or accessible at http://www.sgs.com/en/Terms-and-Conditions.aspx and, for electronic format documents, subject to Terms and Conditions for Electronic Documents at http://www.sgs.com/en/Terms-and-Conditions/Terms-e-Document.aspx. Attention is drawn to the limitation of liability, indemnification and jurisdiction issues defined therein. Any holder of this document is advised that information contained hereon reflects the Company's findings at the time of its intervention only and within the limits of Client's instructions, if any. The Company's sole responsibility is to its Client and this document does not exonerate parties to a transaction from exercising all their rights and obligations under the transaction documents. This document cannot be reproduced except in full, without prior written approval of the Company. Any unauthorized alteration, forgery or falsification of the content or appearance of this document is unlawful and offenders may be prosecuted to the fullest extent of the law. Unless otherwise stated the results shown in this test report refer only to the sample(s) tested .
Attention: To check the authenticity of testing /inspection report & certificate, please contact us at telephone: (86-755) 8307 1443, or email: CN.Doccheck@sgs.com

3rd Building,No.889 Yishan Road Xuhui District,Shanghai China 200233　t E&E (86-21) 61402553　f E&E (86-21)64953679　www.sgsgroup.com.cn
中国 · 上海 · 徐汇区宜山路889号3号楼　邮编: 200233　t HL (86-21) 61402594　f HL (86-21)61156899　e sgs.china@sgs.com

Member of the SGS Group (SGS SA)

检测结果：

检测部件外观描述:

样品序号	样品编号	SGS 样品 ID	样品描述
SN1	A3	SHA24-0084258-0001.C003	银色金属

备注：
(1) 1 mg/kg = 1 ppm = 0.0001%
(2) MDL= 方法检测限
(3) ND = 未检出(< MDL)
(4) "-" = 未规定

欧盟 RoHS 指令 2011/65/EU 附录 II 的修正指令(EU) 2015/863-铅、汞、镉和六价铬

检测方法： 参考 IEC 62321-4:2013+AMD1:2017，IEC 62321-5:2013 和 IEC 62321-7-1:2015，采用 ICP-OES/AAS 和 UV-Vis 进行分析。

检测项目	限值	单位	MDL	A3
铅 (Pb)	1000	mg/kg	2	37
汞 (Hg)	1000	mg/kg	2	ND
镉 (Cd)	100	mg/kg	2	ND
六价铬 (Cr(VI))▼	-	μg/cm²	0.10	ND

备注：
(1) 最大允许极限值引用自RoHS指令(EU) 2015/863。
(2) IEC 62321系列等同于 EN 62321系列。
(3) ▼ = a. 当六价铬的浓度高于0.13 μg/cm²时，样品为阳性，即含有六价铬；
b. 当六价铬的浓度为ND (低于0.10 μg/cm²) 时，样品为阴性，即未检测到六价铬；
c. 当六价铬的浓度介于0.10 μg/cm²与0.13 μg/cm²之间时，无法直接判定是否检测到六价铬，因不同个体的样品表面差异可能会影响测定结果。

由于未获知样品的存储条件和生产日期，样品的六价铬检测结果仅能代表检测时样品含六价铬的状态。

除非另有说明，参照 ILAC-G8:09/2019，使用简单接受（*w*=0）的二元判定规则进行符合性判定。
除非另有说明，此报告结果仅对检测的样品负责。本报告未经本公司书面许可，不可部分复制。

Unless otherwise agreed in writing, this document is issued by the Company subject to its General Conditions of Service printed overleaf, available on request or accessible at http://www.sgs.com/en/Terms-and-Conditions.aspx and, for electronic format documents, subject to Terms and Conditions for Electronic Documents at http://www.sgs.com/en/Terms-and-Conditions/Terms-e-Document.aspx. Attention is drawn to the limitation of liability, indemnification and jurisdiction issues defined therein. Any holder of this document is advised that information contained hereon reflects the Company's findings at the time of its intervention only and within the limits of Client's instructions, if any. The Company's sole responsibility is to its Client and this document does not exonerate parties to a transaction from exercising all their rights and obligations under the transaction documents. This document cannot be reproduced except in full, without prior written approval of the Company. Any unauthorized alteration, forgery or falsification of the content or appearance of this document is unlawful and offenders may be prosecuted to the fullest extent of the law. Unless otherwise stated the results shown in this test report refer only to the sample(s) tested.
Attention: To check the authenticity of testing /inspection report & certificate, please contact us at telephone: (86-755) 8307 1443, or email: CN.Doccheck@sgs.com
3rd Building,No.889 Yishan Road Xuhui District,Shanghai China 200233 t E&E (86-21) 61402553 f E&E (86-21)64953679 www.sgsgroup.com.cn
中国·上海·徐汇区宜山路889号3号楼 邮编: 200233 t HL (86-21) 61402594 f HL (86-21)61156899 e sgs.china@sgs.com
Member of the SGS Group (SGS SA)

附件

元素检测流程图

样品按照下述流程被完全消解

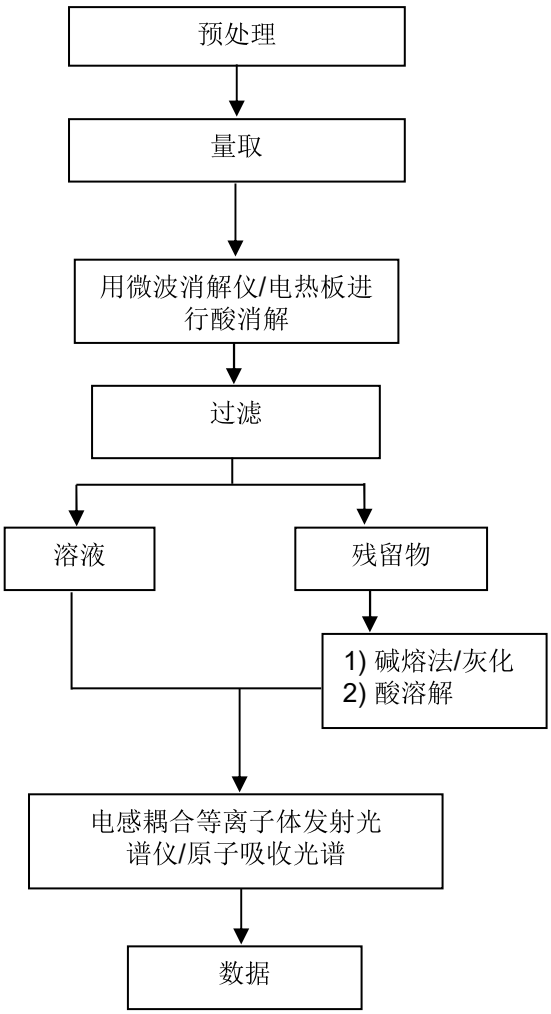

Unless otherwise agreed in writing, this document is issued by the Company subject to its General Conditions of Service printed overleaf, available on request or accessible at http://www.sgs.com/en/Terms-and-Conditions.aspx and, for electronic format documents, subject to Terms and Conditions for Electronic Documents at http://www.sgs.com/en/Terms-and-Conditions/Terms-e-Document.aspx. Attention is drawn to the limitation of liability, indemnification and jurisdiction issues defined therein. Any holder of this document is advised that information contained hereon reflects the Company's findings at the time of its intervention only and within the limits of Client's instructions, if any. The Company's sole responsibility is to its Client and this document does not exonerate parties to a transaction from exercising all their rights and obligations under the transaction documents. This document cannot be reproduced except in full, without prior written approval of the Company. Any unauthorized alteration, forgery or falsification of the content or appearance of this document is unlawful and offenders may be prosecuted to the fullest extent of the law. Unless otherwise stated the results shown in this test report refer only to the sample(s) tested.
Attention: To check the authenticity of testing /inspection report & certificate, please contact us at telephone: (86-755) 8307 1443, or email: CN.Doccheck@sgs.com
3rd Building,No.889 Yishan Road Xuhui District,Shanghai China 200233 t E&E (86-21) 61402553 f E&E (86-21)64953679 www.sgsgroup.com.cn
中国·上海·徐汇区宜山路889号3号楼 邮编: 200233 t HL (86-21) 61402594 f HL (86-21)61156899 e sgs.china@sgs.com
Member of the SGS Group (SGS SA)

附件

六价铬检测流程图

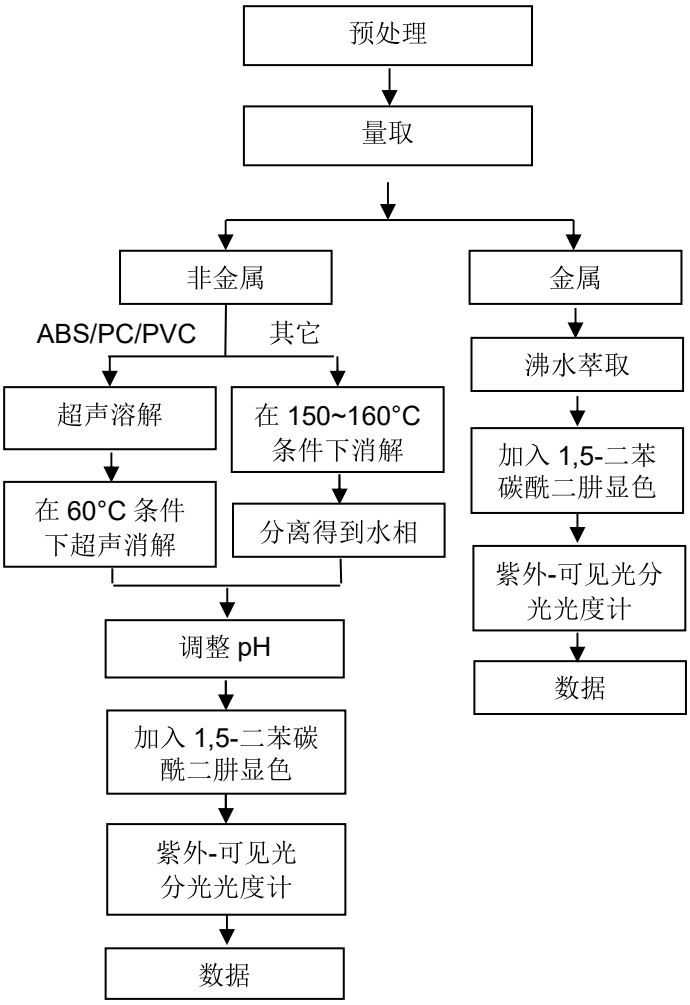

Unless otherwise agreed in writing, this document is issued by the Company subject to its General Conditions of Service printed overleaf, available on request or accessible at http://www.sgs.com/en/Terms-and-Conditions.aspx and, for electronic format documents, subject to Terms and Conditions for Electronic Documents at http://www.sgs.com/en/Terms-and-Conditions/Terms-e-Document.aspx. Attention is drawn to the limitation of liability, indemnification and jurisdiction issues defined therein. Any holder of this document is advised that information contained hereon reflects the Company's findings at the time of its intervention only and within the limits of Client's instructions, if any. The Company's sole responsibility is to its Client and this document does not exonerate parties to a transaction from exercising all their rights and obligations under the transaction documents. This document cannot be reproduced except in full, without prior written approval of the Company. Any unauthorized alteration, forgery or falsification of the content or appearance of this document is unlawful and offenders may be prosecuted to the fullest extent of the law. Unless otherwise stated the results shown in this test report refer only to the sample(s) tested.
Attention: To check the authenticity of testing /inspection report & certificate, please contact us at telephone: (86-755) 8307 1443, or email: CN.Doccheck@sgs.com
3rd Building,No.889 Yishan Road Xuhui District,Shanghai China 200233 t E&E (86–21) 61402553 f E&E (86–21)64953679 www.sgsgroup.com.cn
中国·上海·徐汇区宜山路889号3号楼 邮编: 200233 t HL (86–21) 61402594 f HL (86–21)61156899 e sgs.china@sgs.com
Member of the SGS Group (SGS SA)

附件：

1.0, SH, SHD, 1.25, 51021, DF14, DF13, GH, ZH, PH, PHB, PA, PHSD, DF11, C1251, 51047, 51146, FI-S, PHD, YHD200, PA, SMP, SMW, SMH, SMH200, SMH200-H, YH200, 20039WR, 杜邦 2.0, XH/TJC3, XA, HA, XHB, XHD, XHE, EH, EI, 小四 P, 5263, 5264, 5267, 5268, SZN, SAN, SCN, SCND, JC15, JC20, JC25, 5102, 5240, SMH250, SMP250, SMW250, 25048HS, 25045HP, SM, TJC8, 杜邦 2.54, TJC8A, 杜邦带锁, TJC8B, TJC8H, 5051, 2510, 美尚美, 43640, 43645, 43020, 43025, 5500, 5600, VH, VHRR, YH396, VHR, 35156, 2139, 3.96, 90331, 5195, 5196, 39612, FL, 5557, 5559, 5566, 5569, SL, RV42, EL, YL, 小 EL, 8981, 大四 P, 5058, 5.08, L6.2, VL, VLP/VLR, TJC2, TJC2A, TJC2B, TJC4, TJC1, 1806, MX3.0, 1.58, 51005, 51006, BH3.5, BH4.0, 63080, 51004, TJC15, A4203, CL014, OTP, MKH, SMF, Cy-X201, 35108, 35150, 35151, 35224, 35180, 35965, 42021, 42022, 42002, 35955, SA, SCS, 35189, 35196, CH10, CH2.5, 543, SLP, SLR, YHL500, YWL500, FFC, FPC, 20030, 250, LGC, S11, YH025, 35155, 25415, 5197, 5198, 110, 2.8, 6.3, SCS

NH, XHQ, 42474, 42475, QH, NV, 50300, 50301, 5025, 3191, 5199, STV5, YHL500, YWL500, F001, F002, D440, D600, D620, D700, D220, D230, D250, D480, D520, D280, D630, D430, D400, D450, U-T, F1001-T, SIN-T, 774, 773, 778, 294, TU-JTK(SV), TU(SNB), TO-JTK(RV), MDD, FDD, TG-JT, IDC, AUTO, CONNECTOR, DJ70, DT04, DT06, UY/K1, UY2/K2, UR/K3, UR2, UB/K4, UB2A, UG/K5, U1R/K8, U1B/K9, HJKT10, UDW2, 314, A5001, A5002, MC100, FPC2.54, SGN, PHR, ZHR, 205, 5.2, C1801, C1802, 2060, A5003, ME020, ME010, FPC/FFC, B2541, 1971845, 1971846, 2232043, 2232044, 2232511, 1971895, 1971896, JWPF, SY, Molex1.5, ME0100, RAST, A5004, DV, SJN, SDN, 35182, 35524, RCY, LC, VR, SHJ, SHL, DF19, ACH, IL-Z, SATA, XSR, SUR, SUH, ZE, ZND, ZPD, SFH, PUD, AMP2.0, 35507, DF3, PND, RE, RA, RF, SYP/SYR, HIF3, MC100/ME020/ME010, F2541, VHB, VHC, VHD

SHB1.0, NHB1.0, FIS, VHE, 35313, 30PIN, PR9-409, PR5-70-1, PR5-24, 5240B, 5500B, 5600B,13006,13007, 3DLG06FW, 1719057, 1719058, 1719059, CS28H, 9102501, 9103101, 9111001, PP0311401, 33EMMT26FBK, 3CN2BH02, 3FW06FBM, PP0426613, PP0426202, GIC3.3, 1376421-1, XADR, XADRR, 179846, 179849, XHR, 50235, PAD, PNI, SDL2.5, PS-250-2A-15, 4.8, 62306, H9002, DC4235, 62308, 62420-1, B35E0, 63658-1, 1060-16-0122, RH0409000142, RH011810030061, RH040499000142, RH011810030090, 299900421692, 33146412, 1.25 插板, SPS-01T-110, 282104-1, 282105-1, 282110-1, 282109-1, 21T1000501, 20T1001001, PP043531T, XNIRP, XL, 1123343-1, DF16, 1473413-1, 12147302, MG641234-5, PHBS,0.8, Molex1.2, 35746, 35748, APM2.54

1969738, 1969740, 1971845, 1971846, 1971895, 1971896, 1971946 thru 1971949, 1971954 thru 1971957, 2232008 thru 2232011, 2232000 thru 2232003, 2232016 thru 2232019, 1971962 thru 1971965, 2232024 thru 2232027, 2232289 thru 2232292, 2232043 thru 2232074, 2232298 thru 2232301, 2232511, 2232532, 2232557, 2232559, 2232560, 2232562, 2232563, 2232565, 2232566, 2232568, 2232569, 2232571, 2232572, 2232574, 2232575, 2232577, 2232578, 2232580, 2232581, 2232583, 2232584, 2232586, 2232587, 2232589, 2232590, 2232592, 2232593, 2232595, 2232596, 2232598, 2232599, 2232601, 2232602, 2232604, 2232605, 2232607, 2232608, 2232611 thru 2232682, 2292457, 2292458, 1064,2064,3064,1080,2080,3080,1100,2100,3100,1120, 2120,3120,1150,2150,3150, 1180,2180,3180,1230,2230, 3230,1250,2250,3250,1280,2280,3280,1300,2300,3300, 1480,2480,3480, 1630,2630,3630,1780,2780,3780,1950, 2950,3950,1010,2010,3010,1013,2013,3013,1015,2015, 3015, 1016,2016,3016,1025,2025,3025,1035,2035,3035, 1045,2045,3045,1058,2058,3058,1999,2999,3999, 401,402,403,503,TPA,BX,CPA, 404, 501, 502

A1001 A1002 A1003 A1004 A1005 A1006 A1007 A1008 A1009
A1251 A1252 A1253 A1254 A1255 A1256 A1257 A1258 A1259
A1501 A1502 A1503 A1504 A1505 A1506 A1507 A1508 A1509
A2001 A2002 A2003 A2004 A2005 A2006 A2007 A2008 A2009

Unless otherwise agreed in writing, this document is issued by the Company subject to its General Conditions of Service printed overleaf, available on request or accessible at http://www.sgs.com/en/Terms-and-Conditions.aspx and, for electronic format documents, subject to Terms and Conditions for Electronic Documents at http://www.sgs.com/en/Terms-and-Conditions/Terms-e-Document.aspx. Attention is drawn to the limitation of liability, indemnification and jurisdiction issues defined therein. Any holder of this document is advised that information contained hereon reflects the Company's findings at the time of its intervention only and within the limits of Client's instructions, if any. The Company's sole responsibility is to its Client and this document does not exonerate parties to a transaction from exercising all their rights and obligations under the transaction documents. This document cannot be reproduced except in full, without prior written approval of the Company. Any unauthorized alteration, forgery or falsification of the content or appearance of this document is unlawful and offenders may be prosecuted to the fullest extent of the law. Unless otherwise stated the results shown in this test report refer only to the sample(s) tested.
Attention: To check the authenticity of testing /inspection report & certificate, please contact us at telephone: (86-755) 8307 1443, or email: CN.Doccheck@sgs.com
检验检测专用章 Inspection & Testing Services
SGS-CSTC Standards Technical Services (Shanghai) Co., Ltd. Testing Center-Chemical Laboratory
3rd Building,No.889 Yishan Road Xuhui District,Shanghai China 200233 t E&E (86-21) 61402553 f E&E (86-21)64953679 www.sgsgroup.com.cn
中国·上海·徐汇区宜山路889号3号楼 邮编: 200233 t HL (86-21) 61402594 f HL (86-21)61156899 e sgs.china@sgs.com
Member of the SGS Group (SGS SA)

A2010	A2011	A2012	A2013	A2014	A2015	A2016	A2017	A2018
A2501	A2502	A2503	A2504	A2505	A2506	A2507	A2508	A2509
A25010	A25011	A25012	A25013	A25014	A25015	A25016	A25017	A25018
A2541	A2542	A2543	A2544	A2545	A2546	A2547	A2548	A2549
A3001	A3002	A3003	A3004	A3005	A3006	A3007	A3008	A3009
A3301	A3302	A3303	A3304	A3305	A3306	A3307	A3308	A3309
A3961	A3962	A3963	A3964	A3965	A3966	A3967	A3968	A3969
A4201	A4202	A4203	A4204	A4205	A4206	A4207	A4208	A4209
A5001	A5002	A5003	A5004	A5005	A5006	A5007	A5008	A5009
A5081	A5082	A5083	A5084	A5085	A5086	A5087	A5088	A5089
A6501	A6502	A6503	A6504	A6505	A6506	A6507	A6508	A6509
B1251	B1252	B1253	B1254	B1255	B1256	B1257	B1258	B1259
B1501	B1502	B1503	B1504	B1505	B1506	B1507	B1508	B1509
B2001	B2002	B2003	B2004	B2005	B2006	B2007	B2008	B2009
B2501	B2502	B2503	B2504	B2505	B2506	B2507	B2508	B2509
B2541	B2542	B2543	B2544	B2545	B2546	B2547	B2548	B2549
B76201	B76202	B76203	B76204	B76205	B76206	B76207	B76208	B76209
B13001	B13002	B13003	B13004	B13005	B13006	B13007	B13008	B13009
C01581	C01582	C01583	C01584	C01585	C01586	C01587	C01588	C01589
C1251	C1252	C1253	C1254	C1255	C1256	C1257	C1258	C1259
C1501	C1502	C1503	C1504	C1505	C1506	C1507	C1508	C1509
C2001	C2002	C2003	C2004	C2005	C2006	C2007	C2008	C2009
C2501	C2502	C2503	C2504	C2505	C2506	C2507	C2508	C2509
C25010	C25011	C25012	C25013	C25014	C25015	C25016	C25017	C25018
C2541	C2542	C2543	C2544	C2545	C2546	C2547	C2548	C2549
C3001	C3002	C3003	C3004	C3005	C3006	C3007	C3008	C3009
C3501	C3502	C3503	C3504	C3505	C3506	C3507	C3508	C3509
C3681	C3682	C3683	C3684	C3685	C3686	C3687	C3688	C3689
C3961	C3962	C3963	C3964	C3965	C3966	C3967	C3968	C3969
C4001	C4002	C4003	C4004	C4005	C4006	C4007	C4008	C4009
C4141	C4142	C4143	C4144	C4145	C4146	C4147	C4148	C4149
C4201	C4202	C4203	C4204	C4205	C4206	C4207	C4208	C4209
C4501	C4502	C4503	C4504	C4505	C4506	C4507	C4508	C4509
C5001	C5002	C5003	C5004	C5005	C5006	C5007	C5008	C5009
C6201	C6202	C6203	C6204	C6205	C6206	C6207	C6208	C6209
C6351	C6352	C6353	C6354	C6355	C6356	C6357	C6358	C6359
D2801	D2802	D2803	D2804	D2805	D2806	D2807	D2808	D2809
D4801	D4802	D4803	D4804	D4805	D4806	D4807	D4808	D4809
D5201	D5202	D5203	D5204	D5205	D5206	D5207	D5208	D5209
D6301	D6302	D6303	D6304	D6305	D6306	D6307	D6308	D6309
D6201	D6202	D6203	D6204	D6205	D6206	D6207	D6208	D6209
D7001	D7002	D7003	D7004	D7005	D7006	D7007	D7008	D7009
F0501	F0502	F0503	F0504	F0505	F0506	F0507	F0508	F0509
F05010	F05011	F05012	F05013	F05014	F05015	F05016	F05017	F05018
F1001	F1002	F1003	F1004	F1005	F1006	F1007	F1008	F1009
F10010	F10011	F10012	F10013	F10014	F10015	F10016	F10017	F10018
F2541	F2542	F2543	F2544	F2545	F2546	F2547	F2548	F2549
P0001	P0002	P0003	P0004	P0005	P0006	P0007	P0008	P0009
P0010	P0011	P0012	P0013	P0014	P0015	P0016	P0017	P0018
P0019	P0020	P0021	P0022	P0023	P0024	P0025	P0026	P0027

Unless otherwise agreed in writing, this document is issued by the Company subject to its General Conditions of Service printed overleaf, available on request or accessible at http://www.sgs.com/en/Terms-and-Conditions.aspx and, for electronic format documents, subject to Terms and Conditions for Electronic Documents at http://www.sgs.com/en/Terms-and-Conditions/Terms-e-Document.aspx. Attention is drawn to the limitation of liability, indemnification and jurisdiction issues defined therein. Any holder of this document is advised that information contained hereon reflects the Company's findings at the time of its intervention only and within the limits of Client's instructions, if any. The Company's sole responsibility is to its Client and this document does not exonerate parties to a transaction from exercising all their rights and obligations under the transaction documents. This document cannot be reproduced except in full, without prior written approval of the Company. Any unauthorized alteration, forgery or falsification of the content or appearance of this document is unlawful and offenders may be prosecuted to the fullest extent of the law. Unless otherwise stated the results shown in this test report refer only to the sample(s) tested.
Attention: To check the authenticity of testing /inspection report & certificate, please contact us at telephone: (86-755) 8307 1443, or email: CN.Doccheck@sgs.com
检验检测专用章 Inspection & Testing Services
SGS-CSTC Standards Technical Services (Shanghai) Co.,Ltd. Testing Center-Chemical Laboratory
3rd Building,No.889 Yishan Road Xuhui District,Shanghai China 200233 t E&E (86-21) 61402553 f E&E (86-21)64953679 www.sgsgroup.com.cn
中国·上海·徐汇区宜山路889号3号楼 邮编: 200233 t HL (86-21) 61402594 f HL (86-21)61156899 e sgs.china@sgs.com
Member of the SGS Group (SGS SA)

D2301 D2302 D2303 D2304 D2305 D2306 D2307 D2308 D2309
D6001 D6002 D6003 D6004 D6005 D6006 D6007 D6008 D6009
D2201 D2202 D2203 D2204 D2205 D2206 D2207 D2208 D2209
B10901 B13601 C6001 C6002 C6003 C6004 A20010 A20011 P0028
P0029 P0030 P0031 B11001 C2201 C2202 C4101 C6701 C6702
D630J D700G A20012 P0032 B4001 A0801 A1271 A1803
A10001 A4141 A7501 A7502 A3501 A1201 A4001 A6351 B14501
A20013 A1202 D2501 A1801 A1802

Unless otherwise agreed in writing, this document is issued by the Company subject to its General Conditions of Service printed overleaf, available on request or accessible at http://www.sgs.com/en/Terms-and-Conditions.aspx and, for electronic format documents, subject to Terms and Conditions for Electronic Documents at http://www.sgs.com/en/Terms-and-Conditions/Terms-e-Document.aspx. Attention is drawn to the limitation of liability, indemnification and jurisdiction issues defined therein. Any holder of this document is advised that information contained hereon reflects the Company's findings at the time of its intervention only and within the limits of Client's instructions, if any. The Company's sole responsibility is to its Client and this document does not exonerate parties to a transaction from exercising all their rights and obligations under the transaction documents. This document cannot be reproduced except in full, without prior written approval of the Company. Any unauthorized alteration, forgery or falsification of the content or appearance of this document is unlawful and offenders may be prosecuted to the fullest extent of the law. Unless otherwise stated the results shown in this test report refer only to the sample(s) tested .
Attention: To check the authenticity of testing /inspection report & certificate, please contact us at telephone: (86-755) 8307 1443, or email: CN.Doccheck@sgs.com
3rd Building,No.889 Yishan Road Xuhui District,Shanghai China 200233 t E&E (86–21) 61402553 f E&E (86–21)64953679 www.sgsgroup.com.cn
中国·上海·徐汇区宜山路889号3号楼 邮编: 200233 t HL (86–21) 61402594 f HL (86–21)61156899 e sgs.china@sgs.com
Member of the SGS Group (SGS SA)

样品照片：

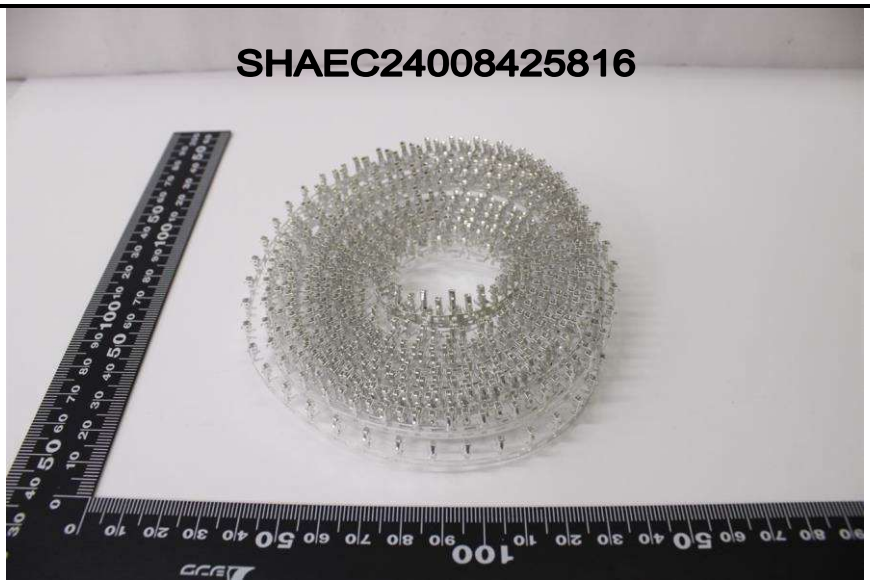

SHA24-0084258-0001.C003

此照片仅限于随 SGS 正本报告使用

报告结束

Unless otherwise agreed in writing, this document is issued by the Company subject to its General Conditions of Service printed overleaf, available on request or accessible at http://www.sgs.com/en/Terms-and-Conditions.aspx and, for electronic format documents, subject to Terms and Conditions for Electronic Documents at http://www.sgs.com/en/Terms-and-Conditions/Terms-e-Document.aspx. Attention is drawn to the limitation of liability, indemnification and jurisdiction issues defined therein. Any holder of this document is advised that information contained hereon reflects the Company's findings at the time of its intervention only and within the limits of Client's instructions, if any. The Company's sole responsibility is to its Client and this document does not exonerate parties to a transaction from exercising all their rights and obligations under the transaction documents. This document cannot be reproduced except in full, without prior written approval of the Company. Any unauthorized alteration, forgery or falsification of the content or appearance of this document is unlawful and offenders may be prosecuted to the fullest extent of the law. Unless otherwise stated the results shown in this test report refer only to the sample(s) tested.
Attention: To check the authenticity of testing /inspection report & certificate, please contact us at telephone: (86-755) 8307 1443, or email: CN.Doccheck@sgs.com
3rd Building,No.889 Yishan Road Xuhui District,Shanghai China 200233 t E&E (86-21) 61402553 f E&E (86-21)64953679 www.sgsgroup.com.cn
中国·上海·徐汇区宜山路889号3号楼 邮编: 200233 t HL (86-21) 61402594 f HL (86-21)61156899 e sgs.china@sgs.com
Member of the SGS Group (SGS SA)

检测报告

编号：SHAEC24008219302　　**日期：**2024 年 04 月 29 日　　第 1 页，共 11 页

客户名称：　浙江联和电子有限公司

客户地址：　浙江省乐清市乐清湾港区乐商创业园
浙江省乐清市乐清湾港区电子信息产业园红旗路 8 号

样品名称：　LCP 连接器

型号：　1.25-4AB

客户参考信息：　见附件

以上样品及信息由客户提供。

SGS 工作编号：　TIC1020240423173125DXY5

样品接收时间：　2024 年 04 月 24 日

检测周期：　2024 年 04 月 24 日 ~ 2024 年 04 月 29 日

检测要求：　根据客户要求检测。

检测方法：　见后续页。

检测结果：　见后续页。

检测要求	结论
欧盟 RoHS 指令 2011/65/EU 附录 II 的修正指令(EU) 2015/863-铅、汞、镉、六价铬、多溴联苯 (PBB)、多溴二苯醚 (PBDE)、邻苯二甲酸二(2-乙基已基)酯 (DEHP)、邻苯二甲酸丁苄酯 (BBP)、邻苯二甲酸二丁酯 (DBP)和邻苯二甲酸二异丁酯 (DIBP)	符合

通标标准技术服务（上海）有限公司
授权签名

Jenny Lan 兰柳珍
批准签署人

scan to see the report
A619732A

Unless otherwise agreed in writing, this document is issued by the Company subject to its General Conditions of Service printed overleaf, available on request or accessible at http://www.sgs.com/en/Terms-and-Conditions.aspx and, for electronic format documents, subject to Terms and Conditions for Electronic Documents at http://www.sgs.com/en/Terms-and-Conditions/Terms-e-Document.aspx. Attention is drawn to the limitation of liability, indemnification and jurisdiction issues defined therein. Any holder of this document is advised that information contained hereon reflects the Company's findings at the time of its intervention only and within the limits of Client's instructions, if any. The Company's sole responsibility is to its Client and this document does not exonerate parties to a transaction from exercising all their rights and obligations under the transaction documents. This document cannot be reproduced except in full, without prior written approval of the Company. Any unauthorized alteration, forgery or falsification of the content or appearance of this document is unlawful and offenders may be prosecuted to the fullest extent of the law. Unless otherwise stated the results shown in this test report refer only to the sample(s) tested .
Attention: To check the authenticity of testing /inspection report & certificate, please contact us at telephone: (86-755) 8307 1443, or email: CN.Doccheck@sgs.com

3rd Building,No.889 Yishan Road Xuhui District,Shanghai China 200233　t E&E (86-21) 61402553　f E&E (86-21)64953679　www.sgsgroup.com.cn
中国 · 上海 · 徐汇区宜山路889号3号楼　邮编: 200233　t HL (86-21) 61402594　f HL (86-21)61156899　e sgs.china@sgs.com

Member of the SGS Group (SGS SA)

检测结果：

检测部件外观描述:

样品序号	样品编号	SGS 样品 ID	样品描述
SN1	A1	SHA24-0082193-0001.C001	米色塑料部分

备注：

(1) 1 mg/kg = 1 ppm = 0.0001%
(2) MDL= 方法检测限
(3) ND = 未检出(< MDL)
(4) "-" = 未规定

欧盟 RoHS 指令 2011/65/EU 附录 II 的修正指令(EU) 2015/863-铅、汞、镉、六价铬、多溴联苯 (PBB)、多溴二苯醚 (PBDE)、邻苯二甲酸二(2-乙基已基)酯 (DEHP)、邻苯二甲酸丁苄酯 (BBP)、邻苯二甲酸二丁酯 (DBP)和邻苯二甲酸二异丁酯 (DIBP)

检测方法： 参考 IEC 62321-4:2013+AMD1:2017，IEC 62321-5:2013，IEC 62321-7-2:2017，IEC 62321-6:2015 和 IEC 62321-8:2017，采用 ICP-OES/AAS，UV-Vis 和 GC-MS 进行分析。

检测项目	限值	单位	MDL	A1
铅 (Pb)	1000	mg/kg	2	7
汞 (Hg)	1000	mg/kg	2	ND
镉 (Cd)	100	mg/kg	2	ND
六价铬 (Cr(VI))	1000	mg/kg	8	ND
多溴联苯之和 (PBB)	1000	mg/kg	-	ND
一溴联苯 (MonoBB)	-	mg/kg	5	ND
二溴联苯 (DiBB)	-	mg/kg	5	ND
三溴联苯 (TriBB)	-	mg/kg	5	ND
四溴联苯 (TetraBB)	-	mg/kg	5	ND
五溴联苯 (PentaBB)	-	mg/kg	5	ND
六溴联苯 (HexaBB)	-	mg/kg	5	ND
七溴联苯 (HeptaBB)	-	mg/kg	5	ND
八溴联苯 (OctaBB)	-	mg/kg	5	ND
九溴联苯 (NonaBB)	-	mg/kg	5	ND
十溴联苯 (DecaBB)	-	mg/kg	5	ND
多溴二苯醚之和 (PBDE)	1000	mg/kg	-	ND
一溴二苯醚 (MonoBDE)	-	mg/kg	5	ND
二溴二苯醚 (DiBDE)	-	mg/kg	5	ND
三溴二苯醚 (TriBDE)	-	mg/kg	5	ND
四溴二苯醚 (TetraBDE)	-	mg/kg	5	ND
五溴二苯醚 (PentaBDE)	-	mg/kg	5	ND
六溴二苯醚 (HexaBDE)	-	mg/kg	5	ND
七溴二苯醚 (HeptaBDE)	-	mg/kg	5	ND
八溴二苯醚 (OctaBDE)	-	mg/kg	5	ND

Unless otherwise agreed in writing, this document is issued by the Company subject to its General Conditions of Service printed overleaf, available on request or accessible at http://www.sgs.com/en/Terms-and-Conditions.aspx and, for electronic format documents, subject to Terms and Conditions for Electronic Documents at http://www.sgs.com/en/Terms-and-Conditions/Terms-e-Document.aspx. Attention is drawn to the limitation of liability, indemnification and jurisdiction issues defined therein. Any holder of this document is advised that information contained hereon reflects the Company's findings at the time of its intervention only and within the limits of Client's instructions, if any. The Company's sole responsibility is to its Client and this document does not exonerate parties to a transaction from exercising all their rights and obligations under the transaction documents. This document cannot be reproduced except in full, without prior written approval of the Company. Any unauthorized alteration, forgery or falsification of the content or appearance of this document is unlawful and offenders may be prosecuted to the fullest extent of the law. Unless otherwise stated the results shown in this test report refer only to the sample(s) tested.
Attention: To check the authenticity of testing /inspection report & certificate, please contact us at telephone: (86-755) 8307 1443, or email: CN.Doccheck@sgs.com
检验检测专用章 Inspection & Testing Services
SGS-CSTC Standards Technical Services (Shanghai) Co., Ltd. Testing Center-Chemical Laboratory
3rd Building,No.889 Yishan Road Xuhui District,Shanghai China 200233 t E&E (86-21) 61402553 f E&E (86-21)64953679 www.sgsgroup.com.cn
中国·上海·徐汇区宜山路889号3号楼 邮编: 200233 t HL (86-21) 61402594 f HL (86-21)61156899 e sgs.china@sgs.com
Member of the SGS Group (SGS SA)

检测项目	限值	单位	MDL	A1
九溴二苯醚 (NonaBDE)	-	mg/kg	5	ND
十溴二苯醚 (DecaBDE)	-	mg/kg	5	ND
邻苯二甲酸二(2-乙基己基)酯 (DEHP)	1000	mg/kg	50	ND
邻苯二甲酸丁苄酯 (BBP)	1000	mg/kg	50	ND
邻苯二甲酸二丁酯 (DBP)	1000	mg/kg	50	ND
邻苯二甲酸二异丁酯 (DIBP)	1000	mg/kg	50	ND

备注：

(1) 最大允许极限值引用自 RoHS 指令(EU) 2015/863。

(2) IEC 62321 系列等同于 EN 62321 系列。

(3) 2021 年 7 月 22 号开始，DEHP， BBP， DBP 和 DIBP 的限制适用于医疗器械，包括体外医疗器械，监控仪表，包括工业监测和控制仪器。

除非另有说明，参照 ILAC-G8:09/2019，使用简单接受（*w*=0）的二元判定规则进行符合性判定。

除非另有说明，此报告结果仅对检测的样品负责。本报告未经本公司书面许可，不可部分复制。

Unless otherwise agreed in writing, this document is issued by the Company subject to its General Conditions of Service printed overleaf, available on request or accessible at http://www.sgs.com/en/Terms-and-Conditions.aspx and, for electronic format documents, subject to Terms and Conditions for Electronic Documents at http://www.sgs.com/en/Terms-and-Conditions/Terms-e-Document.aspx. Attention is drawn to the limitation of liability, indemnification and jurisdiction issues defined therein. Any holder of this document is advised that information contained hereon reflects the Company's findings at the time of its intervention only and within the limits of Client's instructions, if any. The Company's sole responsibility is to its Client and this document does not exonerate parties to a transaction from exercising all their rights and obligations under the transaction documents. This document cannot be reproduced except in full, without prior written approval of the Company. Any unauthorized alteration, forgery or falsification of the content or appearance of this document is unlawful and offenders may be prosecuted to the fullest extent of the law. Unless otherwise stated the results shown in this test report refer only to the sample(s) tested .
Attention: To check the authenticity of testing /inspection report & certificate, please contact us at telephone: (86-755) 8307 1443, or email: CN.Doccheck@sgs.com
3rd Building,No.889 Yishan Road Xuhui District,Shanghai China 200233 t E&E (86-21) 61402553 f E&E (86-21)64953679 www.sgsgroup.com.cn
中国·上海·徐汇区宜山路889号3号楼 邮编: 200233 t HL (86-21) 61402594 f HL (86-21)61156899 e sgs.china@sgs.com
Member of the SGS Group (SGS SA)

附件

元素检测流程图

样品按照下述流程被完全消解

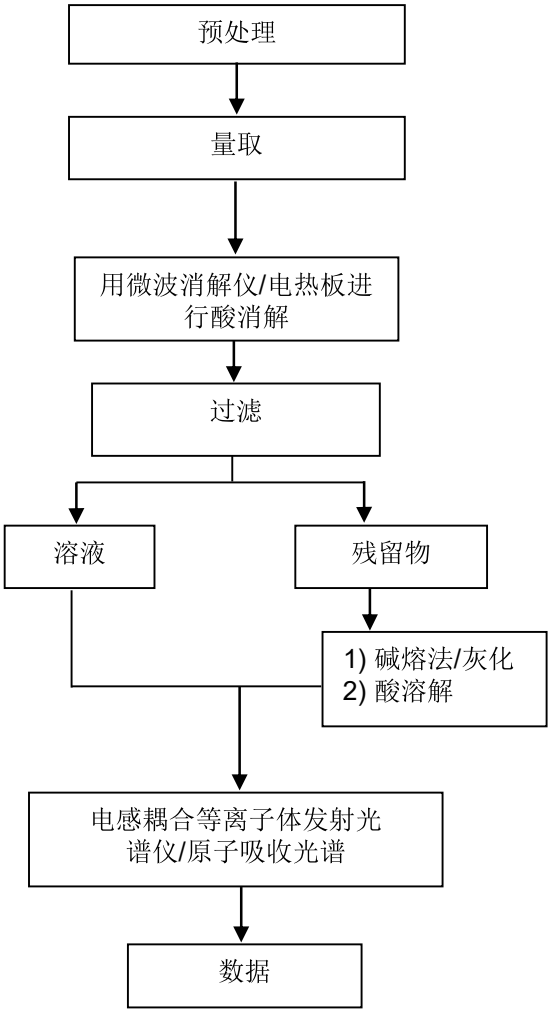

Unless otherwise agreed in writing, this document is issued by the Company subject to its General Conditions of Service printed overleaf, available on request or accessible at http://www.sgs.com/en/Terms-and-Conditions.aspx and, for electronic format documents, subject to Terms and Conditions for Electronic Documents at http://www.sgs.com/en/Terms-and-Conditions/Terms-e-Document.aspx. Attention is drawn to the limitation of liability, indemnification and jurisdiction issues defined therein. Any holder of this document is advised that information contained hereon reflects the Company's findings at the time of its intervention only and within the limits of Client's instructions, if any. The Company's sole responsibility is to its Client and this document does not exonerate parties to a transaction from exercising all their rights and obligations under the transaction documents. This document cannot be reproduced except in full, without prior written approval of the Company. Any unauthorized alteration, forgery or falsification of the content or appearance of this document is unlawful and offenders may be prosecuted to the fullest extent of the law. Unless otherwise stated the results shown in this test report refer only to the sample(s) tested .
Attention: To check the authenticity of testing /inspection report & certificate, please contact us at telephone: (86-755) 8307 1443, or email: CN.Doccheck@sgs.com
3rd Building,No.889 Yishan Road Xuhui District,Shanghai China 200233 t E&E (86-21) 61402553 f E&E (86-21)64953679 www.sgsgroup.com.cn
中国·上海·徐汇区宜山路889号3号楼 邮编: 200233 t HL (86-21) 61402594 f HL (86-21)61156899 e sgs.china@sgs.com
Member of the SGS Group (SGS SA)

附件

六价铬检测流程图

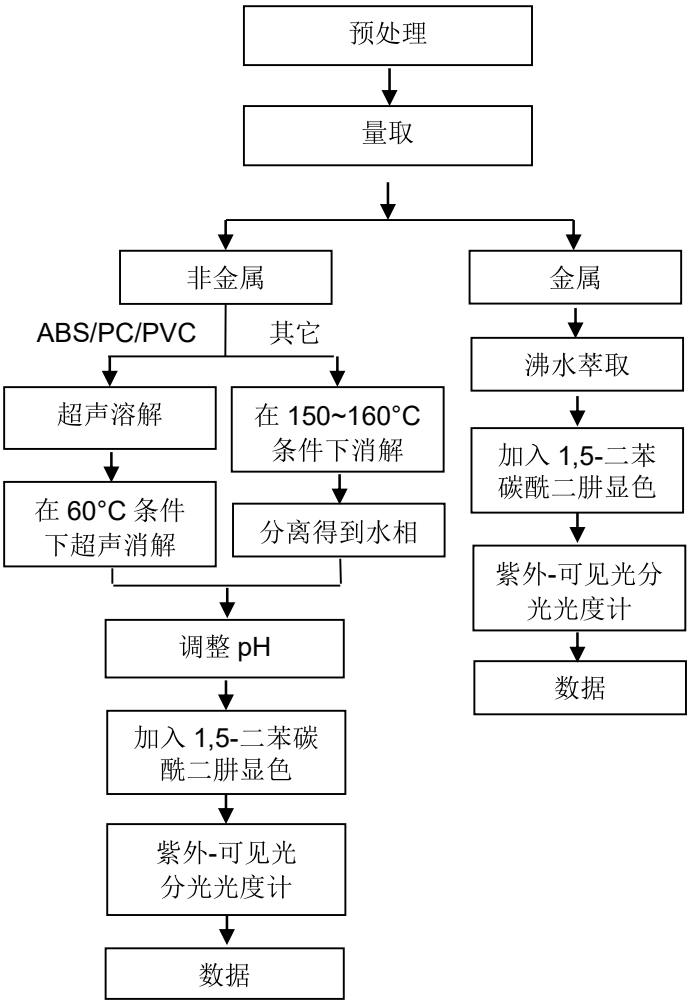

Unless otherwise agreed in writing, this document is issued by the Company subject to its General Conditions of Service printed overleaf, available on request or accessible at http://www.sgs.com/en/Terms-and-Conditions.aspx and, for electronic format documents, subject to Terms and Conditions for Electronic Documents at http://www.sgs.com/en/Terms-and-Conditions/Terms-e-Document.aspx. Attention is drawn to the limitation of liability, indemnification and jurisdiction issues defined therein. Any holder of this document is advised that information contained hereon reflects the Company's findings at the time of its intervention only and within the limits of Client's instructions, if any. The Company's sole responsibility is to its Client and this document does not exonerate parties to a transaction from exercising all their rights and obligations under the transaction documents. This document cannot be reproduced except in full, without prior written approval of the Company. Any unauthorized alteration, forgery or falsification of the content or appearance of this document is unlawful and offenders may be prosecuted to the fullest extent of the law. Unless otherwise stated the results shown in this test report refer only to the sample(s) tested.
Attention: To check the authenticity of testing /inspection report & certificate, please contact us at telephone: (86-755) 8307 1443, or email: CN.Doccheck@sgs.com
3rd Building,No.889 Yishan Road Xuhui District,Shanghai China 200233 t E&E (86-21) 61402553 f E&E (86-21)64953679 www.sgsgroup.com.cn
中国·上海·徐汇区宜山路889号3号楼 邮编: 200233 t HL (86-21) 61402594 f HL (86-21)61156899 e sgs.china@sgs.com
Member of the SGS Group (SGS SA)

附件

PBB/PBDE 检测流程图

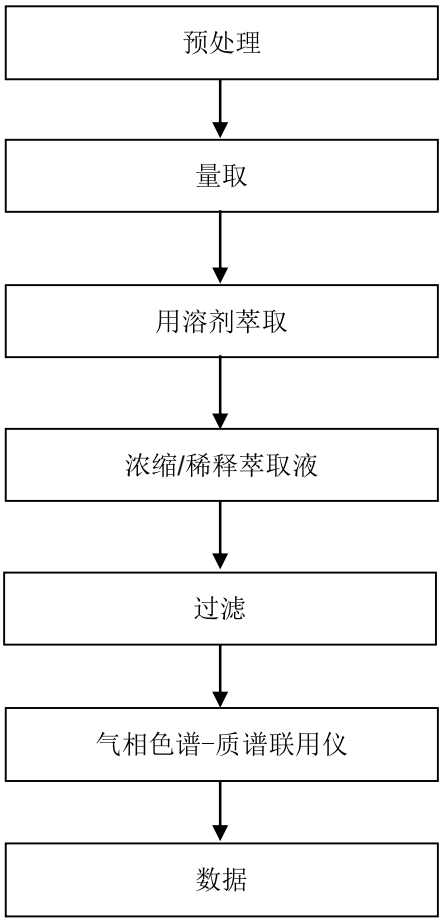

Unless otherwise agreed in writing, this document is issued by the Company subject to its General Conditions of Service printed overleaf, available on request or accessible at http://www.sgs.com/en/Terms-and-Conditions.aspx and, for electronic format documents, subject to Terms and Conditions for Electronic Documents at http://www.sgs.com/en/Terms-and-Conditions/Terms-e-Document.aspx. Attention is drawn to the limitation of liability, indemnification and jurisdiction issues defined therein. Any holder of this document is advised that information contained hereon reflects the Company's findings at the time of its intervention only and within the limits of Client's instructions, if any. The Company's sole responsibility is to its Client and this document does not exonerate parties to a transaction from exercising all their rights and obligations under the transaction documents. This document cannot be reproduced except in full, without prior written approval of the Company. Any unauthorized alteration, forgery or falsification of the content or appearance of this document is unlawful and offenders may be prosecuted to the fullest extent of the law. Unless otherwise stated the results shown in this test report refer only to the sample(s) tested.
Attention: To check the authenticity of testing /inspection report & certificate, please contact us at telephone: (86-755) 8307 1443, or email: CN.Doccheck@sgs.com
3rd Building,No.889 Yishan Road Xuhui District,Shanghai China 200233 t E&E (86-21) 61402553 f E&E (86-21)64953679 www.sgsgroup.com.cn
中国·上海·徐汇区宜山路889号3号楼 邮编: 200233 t HL (86-21) 61402594 f HL (86-21)61156899 e sgs.china@sgs.com
Member of the SGS Group (SGS SA)

附件

Phthalates 检测流程图

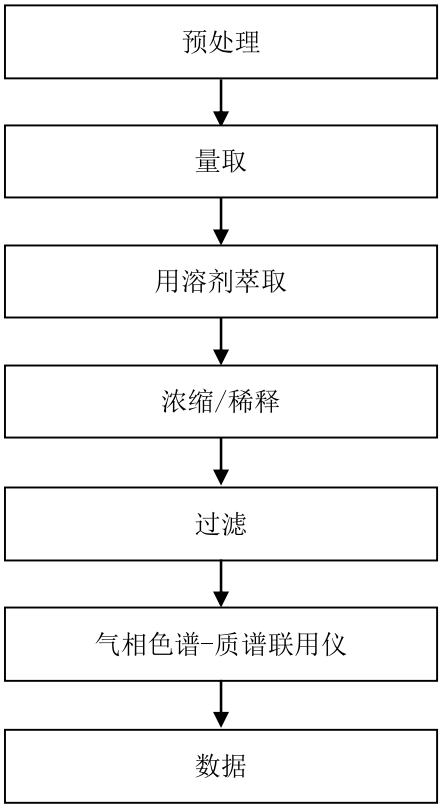

Unless otherwise agreed in writing, this document is issued by the Company subject to its General Conditions of Service printed overleaf, available on request or accessible at http://www.sgs.com/en/Terms-and-Conditions.aspx and, for electronic format documents, subject to Terms and Conditions for Electronic Documents at http://www.sgs.com/en/Terms-and-Conditions/Terms-e-Document.aspx. Attention is drawn to the limitation of liability, indemnification and jurisdiction issues defined therein. Any holder of this document is advised that information contained hereon reflects the Company's findings at the time of its intervention only and within the limits of Client's instructions, if any. The Company's sole responsibility is to its Client and this document does not exonerate parties to a transaction from exercising all their rights and obligations under the transaction documents. This document cannot be reproduced except in full, without prior written approval of the Company. Any unauthorized alteration, forgery or falsification of the content or appearance of this document is unlawful and offenders may be prosecuted to the fullest extent of the law. Unless otherwise stated the results shown in this test report refer only to the sample(s) tested .
Attention: To check the authenticity of testing /inspection report & certificate, please contact us at telephone: (86-755) 8307 1443, or email: CN.Doccheck@sgs.com
3rd Building,No.889 Yishan Road Xuhui District,Shanghai China 200233 t E&E (86-21) 61402553 f E&E (86-21)64953679 www.sgsgroup.com.cn
中国·上海·徐汇区宜山路889号3号楼 邮编: 200233 t HL (86-21) 61402594 f HL (86-21)61156899 e sgs.china@sgs.com
Member of the SGS Group (SGS SA)

附件：
1.0， SH， SHD， 1.25， 51021， DF14， DF13， GH， ZH， PH， PHB， PA， PHSD， DF11， C1251， 51047， 51146， FI-S， PHD， YHD200， PA， SMP，SMW，SMH， SMH200， SMH200-H， YH200，20039WR， 杜邦 2.0， XH/TJC3， XA， HA， XHB， XHD， XHE， EH， EI， 小四 P， 5263， 5264，5267，5268， SZN， SAN， SCN， SCND， JC15， JC20， JC25， 5102， 5240， SMH250， SMP250， SMW250， 25048HS， 25045HP， SM， TJC8, 杜邦 2.54， TJC8A，杜邦带锁， TJC8B， TJC8H， 5051，2510， 美尚美， 43640， 43645， 43020， 43025， 5500， 5600， VH， VHRR， YH396， VHR， 35156， 2139， 3.96， 90331， 5195， 5196， 39612， FL， 5557， 5559， 5566， 5569， SL，RV42， EL， YL， 小 EL， 8981， 大四 P， 5058， 5.08， L6.2， VL， VLP/VLR， TJC2， TJC2A， TJC2B， TJC4， TJC1， 1806， MX3.0， 1.58， 51005， 51006， BH3.5， BH4.0， 63080， 51004， TJC15， A4203， CL014， OTP， MKH， SMF， Cy-X201， 35108， 35150， 35151， 35224， 35180， 35965， 42021， 42022， 42002， 35955， SA， SCS， 35189， 35196， CH10， CH2.5， 543， SLP， SLR， YHL500， YWL500， FFC， FPC， 20030， 250， LGC， S11， YH025， 35155， 25415， 5197， 5198， 110， 2.8， 6.3， SCS

NH， XHQ， 42474， 42475， QH， NV， 50300， 50301， 5025， 3191， 5199， STV5， YHL500， YWL500， F001， F002， D440， D600， D620， D700， D220， D230， D250， D480， D520， D280， D630， D430， D400， D450， U-T， F1001-T， SIN-T， 774， 773， 778， 294， TU-JTK(SV)， TU(SNB)， TO-JTK(RV)， MDD， FDD， TG-JT， IDC， AUTO， CONNECTOR， DJ70， DT04， DT06， UY/K1， UY2/K2， UR/K3， UR2， UB/K4， UB2A， UG/K5， U1R/K8， U1B/K9， HJKT10， UDW2， 314， A5001， A5002， MC100， FPC2.54， SGN， PHR， ZHR， 205， 5.2， C1801， C1802， 2060， A5003， ME020， ME010， FPC/FFC， B2541， 1971845， 1971846， 2232043， 2232044， 2232511， 1971895， 1971896， JWPF， SY， Molex1.5， ME0100， RAST， A5004， DV， SJN， SDN， 35182， 35524， RCY， LC， VR， SHJ， SHL， DF19， ACH， IL-Z， SATA， XSR， SUR， SUH， ZE， ZND， ZPD， SFH， PUD， AMP2.0， 35507， DF3， PND， RE， RA， RF， SYP/SYR， HIF3， MC100/ME020/ME010， F2541， VHB， VHC， VHD
SHB1.0, NHB1.0, FIS, VHE, 35313, 30PIN, PR9-409, PR5-70-1, PR5-24, 5240B, 5500B, 5600B,13006,13007, 3DLG06FW, 1719057, 1719058, 1719059, CS28H, 9102501, 9103101, 9111001, PP0311401, 33EMMT26FBK, 3CN2BH02, 3FW06FBM, PP0426613, PP0426202, GIC3.3, 1376421-1, XADR, XADRR, 179846, 179849, XHR, 50235, PAD, PNI, SDL2.5, PS-250-2A-15, 4.8, 62306, H9002, DC4235, 62308, 62420-1, B35E0, 63658-1, 1060-16-0122, RH0409000142, RH011810030061, RH040499000142, RH011810030090, 299900421692, 33146412, 1.25 插板, SPS-01T-110, 282104-1, 282105-1, 282110-1, 282109-1, 21T1000501, 20T1001001, PP043531T, XNIRP, XL, 1123343-1, DF16, 1473413-1, 12147302, MG641234-5, PHBS,0.8, Molex1.2, 35746, 35748, APM2.54

1969738, 1969740, 1971845, 1971846, 1971895, 1971896, 1971946 thru 1971949, 1971954 thru 1971957, 2232008 thru 2232011, 2232000 thru 2232003, 2232016 thru 2232019, 1971962 thru 1971965, 2232024 thru 2232027, 2232289 thru 2232292, 2232043 thru 2232074, 2232298 thru 2232301, 2232511, 2232532, 2232557, 2232559, 2232560, 2232562, 2232563, 2232565, 2232566, 2232568, 2232569, 2232571, 2232572, 2232574, 2232575, 2232577, 2232578, 2232580, 2232581, 2232583, 2232584, 2232586, 2232587, 2232589, 2232590, 2232592, 2232593, 2232595, 2232596, 2232598, 2232599, 2232601, 2232602, 2232604, 2232605, 2232607, 2232608, 2232611 thru 2232682, 2292457, 2292458, 1064,2064,3064,1080,2080,3080,1100,2100,3100,1120, 2120,3120,1150,2150,3150, 1180,2180,3180,1230,2230, 3230,1250,2250,3250,1280,2280,3280,1300,2300,3300, 1480,2480,3480, 1630,2630,3630,1780,2780,3780,1950, 2950,3950,1010,2010,3010,1013,2013,3013,1015,2015, 3015, 1016,2016,3016,1025,2025,3025,1035,2035,3035, 1045,2045,3045,1058,2058,3058,1999,2999,3999, 401,402,403,503,TPA,BX,CPA, 404, 501, 502
A1001 A1002 A1003 A1004 A1005 A1006 A1007 A1008 A1009

Unless otherwise agreed in writing, this document is issued by the Company subject to its General Conditions of Service printed overleaf, available on request or accessible at http://www.sgs.com/en/Terms-and-Conditions.aspx and, for electronic format documents, subject to Terms and Conditions for Electronic Documents at http://www.sgs.com/en/Terms-and-Conditions/Terms-e-Document.aspx. Attention is drawn to the limitation of liability, indemnification and jurisdiction issues defined therein. Any holder of this document is advised that information contained hereon reflects the Company's findings at the time of its intervention only and within the limits of Client's instructions, if any. The Company's sole responsibility is to its Client and this document does not exonerate parties to a transaction from exercising all their rights and obligations under the transaction documents. This document cannot be reproduced except in full, without prior written approval of the Company. Any unauthorized alteration, forgery or falsification of the content or appearance of this document is unlawful and offenders may be prosecuted to the fullest extent of the law. Unless otherwise stated the results shown in this test report refer only to the sample(s) tested.
Attention: To check the authenticity of testing /inspection report & certificate, please contact us at telephone: (86-755) 8307 1443, or email: CN.Doccheck@sgs.com
检验检测专用章 Inspection & Testing Services
SGS-CSTC Standards Technical Services (Shanghai) Co., Ltd. Testing Center-Chemical Laboratory
3rd Building,No.889 Yishan Road Xuhui District,Shanghai China 200233 t E&E (86-21) 61402553 f E&E (86-21)64953679 www.sgsgroup.com.cn
中国·上海·徐汇区宜山路889号3号楼 邮编: 200233 t HL (86-21) 61402594 f HL (86-21)61156899 e sgs.china@sgs.com
Member of the SGS Group (SGS SA)

A1251	A1252	A1253	A1254	A1255	A1256	A1257	A1258	A1259
A1501	A1502	A1503	A1504	A1505	A1506	A1507	A1508	A1509
A2001	A2002	A2003	A2004	A2005	A2006	A2007	A2008	A2009
A2010	A2011	A2012	A2013	A2014	A2015	A2016	A2017	A2018
A2501	A2502	A2503	A2504	A2505	A2506	A2507	A2508	A2509
A25010	A25011	A25012	A25013	A25014	A25015	A25016	A25017	A25018
A2541	A2542	A2543	A2544	A2545	A2546	A2547	A2548	A2549
A3001	A3002	A3003	A3004	A3005	A3006	A3007	A3008	A3009
A3301	A3302	A3303	A3304	A3305	A3306	A3307	A3308	A3309
A3961	A3962	A3963	A3964	A3965	A3966	A3967	A3968	A3969
A4201	A4202	A4203	A4204	A4205	A4206	A4207	A4208	A4209
A5001	A5002	A5003	A5004	A5005	A5006	A5007	A5008	A5009
A5081	A5082	A5083	A5084	A5085	A5086	A5087	A5088	A5089
A6501	A6502	A6503	A6504	A6505	A6506	A6507	A6508	A6509
B1251	B1252	B1253	B1254	B1255	B1256	B1257	B1258	B1259
B1501	B1502	B1503	B1504	B1505	B1506	B1507	B1508	B1509
B2001	B2002	B2003	B2004	B2005	B2006	B2007	B2008	B2009
B2501	B2502	B2503	B2504	B2505	B2506	B2507	B2508	B2509
B2541	B2542	B2543	B2544	B2545	B2546	B2547	B2548	B2549
B76201	B76202	B76203	B76204	B76205	B76206	B76207	B76208	B76209
B13001	B13002	B13003	B13004	B13005	B13006	B13007	B13008	B13009
C01581	C01582	C01583	C01584	C01585	C01586	C01587	C01588	C01589
C1251	C1252	C1253	C1254	C1255	C1256	C1257	C1258	C1259
C1501	C1502	C1503	C1504	C1505	C1506	C1507	C1508	C1509
C2001	C2002	C2003	C2004	C2005	C2006	C2007	C2008	C2009
C2501	C2502	C2503	C2504	C2505	C2506	C2507	C2508	C2509
C25010	C25011	C25012	C25013	C25014	C25015	C25016	C25017	C25018
C2541	C2542	C2543	C2544	C2545	C2546	C2547	C2548	C2549
C3001	C3002	C3003	C3004	C3005	C3006	C3007	C3008	C3009
C3501	C3502	C3503	C3504	C3505	C3506	C3507	C3508	C3509
C3681	C3682	C3683	C3684	C3685	C3686	C3687	C3688	C3689
C3961	C3962	C3963	C3964	C3965	C3966	C3967	C3968	C3969
C4001	C4002	C4003	C4004	C4005	C4006	C4007	C4008	C4009
C4141	C4142	C4143	C4144	C4145	C4146	C4147	C4148	C4149
C4201	C4202	C4203	C4204	C4205	C4206	C4207	C4208	C4209
C4501	C4502	C4503	C4504	C4505	C4506	C4507	C4508	C4509
C5001	C5002	C5003	C5004	C5005	C5006	C5007	C5008	C5009
C6201	C6202	C6203	C6204	C6205	C6206	C6207	C6208	C6209
C6351	C6352	C6353	C6354	C6355	C6356	C6357	C6358	C6359
D2801	D2802	D2803	D2804	D2805	D2806	D2807	D2808	D2809
D4801	D4802	D4803	D4804	D4805	D4806	D4807	D4808	D4809
D5201	D5202	D5203	D5204	D5205	D5206	D5207	D5208	D5209
D6301	D6302	D6303	D6304	D6305	D6306	D6307	D6308	D6309
D6201	D6202	D6203	D6204	D6205	D6206	D6207	D6208	D6209
D7001	D7002	D7003	D7004	D7005	D7006	D7007	D7008	D7009
F0501	F0502	F0503	F0504	F0505	F0506	F0507	F0508	F0509
F05010	F05011	F05012	F05013	F05014	F05015	F05016	F05017	F05018
F1001	F1002	F1003	F1004	F1005	F1006	F1007	F1008	F1009
F10010	F10011	F10012	F10013	F10014	F10015	F10016	F10017	F10018
F2541	F2542	F2543	F2544	F2545	F2546	F2547	F2548	F2549
P0001	P0002	P0003	P0004	P0005	P0006	P0007	P0008	P0009
P0010	P0011	P0012	P0013	P0014	P0015	P0016	P0017	P0018

Unless otherwise agreed in writing, this document is issued by the Company subject to its General Conditions of Service printed overleaf, available on request or accessible at http://www.sgs.com/en/Terms-and-Conditions.aspx and, for electronic format documents, subject to Terms and Conditions for Electronic Documents at http://www.sgs.com/en/Terms-and-Conditions/Terms-e-Document.aspx. Attention is drawn to the limitation of liability, indemnification and jurisdiction issues defined therein. Any holder of this document is advised that information contained hereon reflects the Company's findings at the time of its intervention only and within the limits of Client's instructions, if any. The Company's sole responsibility is to its Client and this document does not exonerate parties to a transaction from exercising all their rights and obligations under the transaction documents. This document cannot be reproduced except in full, without prior written approval of the Company. Any unauthorized alteration, forgery or falsification of the content or appearance of this document is unlawful and offenders may be prosecuted to the fullest extent of the law. Unless otherwise stated the results shown in this test report refer only to the sample(s) tested.
Attention: To check the authenticity of testing /inspection report & certificate, please contact us at telephone: (86-755) 8307 1443, or email: CN.Doccheck@sgs.com
检验检测专用章 Inspection & Testing Services
SGS-CSTC Standards Technical Services (Shanghai) Co., Ltd. Testing Center-Chemical Laboratory
3rd Building,No.889 Yishan Road Xuhui District,Shanghai China 200233 t E&E (86-21) 61402553 f E&E (86-21)64953679 www.sgsgroup.com.cn
中国·上海·徐汇区宜山路889号3号楼 邮编: 200233 t HL (86-21) 61402594 f HL (86-21)61156899 e sgs.china@sgs.com
Member of the SGS Group (SGS SA)

P0019 P0020 P0021 P0022 P0023 P0024 P0025 P0026 P0027
D2301 D2302 D2303 D2304 D2305 D2306 D2307 D2308 D2309
D6001 D6002 D6003 D6004 D6005 D6006 D6007 D6008 D6009
D2201 D2202 D2203 D2204 D2205 D2206 D2207 D2208 D2209
B10901 B13601 C6001 C6002 C6003 C6004 A20010 A20011 P0028
P0029 P0030 P0031 B11001 C2201 C2202 C4101 C6701 C6702
D630J D700G A20012 P0032 B4001 A0801 A1271 A1803
A10001 A4141 A7501 A7502 A3501 A1201 A4001 A6351 B14501
A20013 A1202 D2501 A1801 A1802

Unless otherwise agreed in writing, this document is issued by the Company subject to its General Conditions of Service printed overleaf, available on request or accessible at http://www.sgs.com/en/Terms-and-Conditions.aspx and, for electronic format documents, subject to Terms and Conditions for Electronic Documents at http://www.sgs.com/en/Terms-and-Conditions/Terms-e-Document.aspx. Attention is drawn to the limitation of liability, indemnification and jurisdiction issues defined therein. Any holder of this document is advised that information contained hereon reflects the Company's findings at the time of its intervention only and within the limits of Client's instructions, if any. The Company's sole responsibility is to its Client and this document does not exonerate parties to a transaction from exercising all their rights and obligations under the transaction documents. This document cannot be reproduced except in full, without prior written approval of the Company. Any unauthorized alteration, forgery or falsification of the content or appearance of this document is unlawful and offenders may be prosecuted to the fullest extent of the law. Unless otherwise stated the results shown in this test report refer only to the sample(s) tested .
Attention: To check the authenticity of testing /inspection report & certificate, please contact us at telephone: (86-755) 8307 1443, or email: CN.Doccheck@sgs.com
3rd Building,No.889 Yishan Road Xuhui District,Shanghai China 200233 t E&E (86–21) 61402553 f E&E (86–21)64953679 www.sgsgroup.com.cn
中国·上海·徐汇区宜山路889号3号楼 邮编: 200233 t HL (86–21) 61402594 f HL (86–21)61156899 e sgs.china@sgs.com
Member of the SGS Group (SGS SA)

样品照片：

SHA24-0082193-0001.C001

此照片仅限于随 SGS 正本报告使用

报告结束

Unless otherwise agreed in writing, this document is issued by the Company subject to its General Conditions of Service printed overleaf, available on request or accessible at http://www.sgs.com/en/Terms-and-Conditions.aspx and, for electronic format documents, subject to Terms and Conditions for Electronic Documents at http://www.sgs.com/en/Terms-and-Conditions/Terms-e-Document.aspx. Attention is drawn to the limitation of liability, indemnification and jurisdiction issues defined therein. Any holder of this document is advised that information contained hereon reflects the Company's findings at the time of its intervention only and within the limits of Client's instructions, if any. The Company's sole responsibility is to its Client and this document does not exonerate parties to a transaction from exercising all their rights and obligations under the transaction documents. This document cannot be reproduced except in full, without prior written approval of the Company. Any unauthorized alteration, forgery or falsification of the content or appearance of this document is unlawful and offenders may be prosecuted to the fullest extent of the law. Unless otherwise stated the results shown in this test report refer only to the sample(s) tested.
Attention: To check the authenticity of testing /inspection report & certificate, please contact us at telephone: (86-755) 8307 1443, or email: CN.Doccheck@sgs.com
3rd Building,No.889 Yishan Road Xuhui District,Shanghai China 200233 t E&E (86-21) 61402553 f E&E (86-21)64953679 www.sgsgroup.com.cn
中国·上海·徐汇区宜山路889号3号楼 邮编: 200233 t HL (86-21) 61402594 f HL (86-21)61156899 e sgs.china@sgs.com
Member of the SGS Group (SGS SA)

化 学 品 安 全 说 明 书

MSDS

第一部分：化学制品、产品或公司信息

产品名称： PA66
产品别名：聚酰胺
责任方：浙江联和电子有限公司
一般用途:工程热塑性塑料

MSDS编号: PA66

第二部分：合成物或成分信息

组成部分：成分 CAS号码基础树脂 32131-17-2这是一种聚合物材料。所有成分和聚合物系统紧密结合，因此，目前正常的加工和处理情况下没有存在接触的可能性。本产品可能含有专利成分。根据美国《职业安全与卫生条例》，本产品没有被归类为危险品，此化学品安全说明书包含关于安全处理和合理使用本产品的有价值的重要信息。该说明书应妥善保管以便员工或其他使用该产品的用户使用。本产品不受加拿大《工作场所危险物质信息系统》管制。

第三部分：危险鉴定

紧急情况概述：轻微的不规则颗粒物状。燃烧分解可能会产生有危害性的气体基础树脂粉尘或粉末在美国矿务局相关粉尘爆炸的危害等级为低级。熔料可能会导致皮肤或眼睛接触性的热灼伤。此外，溢出的固体硬颗粒可能会造成滑倒的危险。

潜在健康影响：接触方式:皮肤和眼睛接触；气体吸入，如果温度过热的话。征兆症状：没有相关的具体资料。

即刻健康影响：
皮肤：本产品没有相关的具体资料。产品中可能含有的聚合物颗粒和纤维增强也可能会造成机械性的伤害。热性或熔化材料有潜在的可能导致热灼伤。
眼睛:本产品没有相关的具体资料。产品中可能含有的聚合物颗粒和纤维增强也可能会造成机械性的伤害。

吸入：	本产品没有相关的具体资料。从供应的形式来看，本产品不存在被吸入的危险；然而聚合物颗粒可能被认为一种是惰性的微害微粒。加热过程中可能会有产生刺激性气体的危险。
摄入：	本产品没有相关的具体资料。但是，基于高分子聚合物的生物活性，摄取本产品预计会造成轻微的毒性。
长期或滞后影响：	没有相关的具体资料。
致癌性：	国际癌症研究机构（ IARC）曾评估过本产品中可能含有的碳黑，并发现它可能对人类有致癌性（ 2B组）。本产品中的任何碳黑成分都被聚合物体系紧密结合，因此，目前正常的加工和处理情况下致癌的几率很小。
医疗条件风险加剧：	本产品没有相关的具体资料。废气可能会被释放，如果过热的话，会影响那些有呼吸系统慢性疾病的人。

第四部分：急救措施

皮肤：如果烫的或熔化的聚合物或者热气接触皮肤，迅速用冷水降温。如果聚合物被粘在皮肤上，不要擅自去除，但是允许粘附的聚合物自然脱落，应寻求医学处理。相比聚合物随着时间推移自行脱落而言，擅自去除粘在皮肤上的聚合物，可能会造成更多的组织损伤。

眼睛：用大量的水冲洗。如果仍旧不舒适，应寻求医疗处理，去除异物。

吸入：转移到空气新鲜之处。如果呼吸困难的情况仍然发生，应寻求医学处理。

摄入：如果相当数量的本产品被吞咽，应饮用两杯水来稀释，并寻求医学处理。

医生注意事项：本产品本质上是惰性和无毒的。然而，如果被加热到高温或被燃烧，可能会有气体排放出来（见第五和第十部分的气体排放）。在这些排放的气体中，一氧化碳和一氧化氮昀有可能具有显著的临床毒性。那些曾暴露在有毒气体中的患者需要检查碳氧血红蛋白水平和动脉血气。如果一个酸中毒患者的碳氧血红蛋白水平是正常的，考虑氰化物毒性。如果患者与气体的接触发生在密闭空间内，则存在窒息（二氧化碳逐渐替代氧气）发生的可能性。一氧化氮对呼吸道有着强烈的刺激性。如果患者可能已经吸入高浓度和刺激性的烟雾，应考虑监测肺水肿病延后发生的可能。

第五部分：救火措施

闪点:不适用
危险燃烧产物：一氧化碳、二氧化碳和氮氧化物
灭火介质：水、泡沫材料、二氧化碳或干化学制
剂灭火指南：消防人员应携带自给式呼吸器和全套防护服。消防人员避免逆风救火。水应该用来给火灾中各种容器的降温。水、泡沫和干化学制剂可能会对电器设备造成损伤。

第六部分：意外泄漏对策

泄漏处理程序：用适当工具清扫泄漏场所，收集泄漏物料，以便恢复和处理。

第七部分：处理和储藏

处理：没有合适的器械，不要处理烫的或者熔化的物料。工作场所应保持整洁有序。不要超过推荐的温度，使分解产物的释放昀小化。不要在有聚合物粉尘存在的场所抽烟。在传输和加工的过程中，应采取恰当的措施控制粉尘的产生和积累。
储藏：储藏在阴凉干燥的场所，保证树脂的干燥度。

第八部分：接触控制 /个人防护

工程控制：局部排气：建议在适当的时候以控制员工接触粉尘或蒸汽。总体而言，作为控制员工暴露在粉尘或者蒸汽中的唯一手段，此办法恐怕不能满足需要。
装备推荐：
皮肤：加热或熔化过程中，有机会接触物料时应穿着长裤、长袖、隔
热手套和面罩。
眼睛：推荐安全眼罩。
吸入：如果粉尘或分解气体的产生有可能高于所允许接触的上限值，推荐使用经国家职业安全与健康研究所认证的防毒面罩 /口罩。

接触指导方针 :本产品中可能含有的任何玻璃颗粒被聚合物系统紧密结合。残留的玻璃颗粒（<1%）可能存在，导致机械性的眼部、皮肤和呼吸刺激。包括机械加工或磨削在内的操作或部分应加以审查，以确保颗粒水平低于推荐的标准，本产品可能含有炭黑。见下列的接触极限值。

成分	机构	参数
炭黑	美国职业安全与健康条例 -允许接触极限	3.5 mg/cu m
	美国政府工业卫生专家会议 -临界值限定	3.5 mg/cu m
微害惰性粉尘	美国职业安全与健康条例 -允许接触极限	15 mg/cu m (全部) 5 mg/cu m (可吸入)
微害颗粒/微粒	美国政府工业卫生专家会议 -临界值限定	10 mg/cu m (全部) 3 mg/cu m (可吸入)

第九部分：物理和化学特性

外观：颗粒状物
气味：轻微的典型气味
物理状态：固态
气压：不适用
熔点（树脂）： 265℃（509℉）
溶解性：可忽略不计 < 0.1%（水）
比重： 1.40~1.50
挥发率：〈0.5按重量计

第十部分：稳定性和反应性

化学稳定性：在通常使用和储存条件下保持稳定
避免条件：燃烧：不要加热超过 650℉（ 343℃）。避免长时间暴露在温度高于 600℉（316℃）的环境。
不能共存性：强酸和氧化剂
危险分解物：一氧化碳、氨 /氨水、脂族胺、氨基化合物/酰胺、酮、腈和氢氰酸。
危险聚合反应：不会发生。

第十一部分：毒物学信息
本产品没有相关的具体资料。

第十二部分：生态学信息

生物毒性：对于树脂颗粒可能被野生动物摄入所造成的影响，我们还不是很清楚。如果是海鸟，一些海洋生物学家认为，鸟类消化道可能无法让塑料颗粒通过。因此，大量摄入颗粒可能会导致肠堵塞，饱食的错觉或营养吸收的减少，从而导致营养不良和饥饿。由塑料工业协会的发起的‘彻底清除行动’（OCS）的目标就是实现塑料颗粒零损失，防止其输入环境。
环境结果/信息：此材料被认为是不可生物降解的。

第十三部分：处置条件
处置：鼓励回收。按照当地政策法规处置本产品。

第十四部分：运输信息
不适用

第十五部分：法规信息

<美国>《有毒物质管理法》：
本产品的所有成分符合有毒物质管理法目录条例。
<美国>《超级基金增补和再授权法案》： 本产品不包含任何受限于《紧急规划和社区知权法》（1986）第 313章和《联邦法规汇编》第 40标题第 372部分中的报告规定的有毒化学物质。

第十六部分：其它信息

危害等级：	健康	可燃性	反应性	其它
国家防火协会	1	1	0	
危险物质鉴别系统	1	1	0	

否认声明： 本产品不适用于作为医学或牙科植入物的使用。为获取详细的工艺指导和良好的生产实践（净化、工艺参数、停炉等），请参阅相应的大赛璐公告。据我们所知，这里所含的信息是正确的。我们没有暗示或者保证此文件所列出的危险已经包含全部危险。大赛璐不做任何关于在你方工艺或与其他物质结合过程中安全使用本产品的明示或暗示性的保证。本产品的使用效果可能会因为其他材料的使用而恶化；或者说本产品可能增强，也可能恶化其他材料的使用效果。用户有其责任对任何使用或者使用方式加以仔细考虑并确定物料的适用性。用户必须符合所有适用的安全和健康标准。

编号：LHES006

MSDS

1．物品成分与厂商资料	
厂商名称：浙江联和电子有限公司	物品编号：QSN6.5-0.1
	物品名称：磷铜端子
	纯物质：
	危害物质成分（%）无

2.成份辨识资料

成份名称	化学文摘社登记号码(CAS No.)	浓度范围（成分百分比 Percentage (%)
铜(Cu)	7440-50-8	余量
磷(P)	7723-14-0	0.0026-0.005%
锌(Zn)	7440-66-6	0.03-0.04%
镍(Ni)	7440-02-0	0.054-0.063%
锑（Sb）	7440-36-0	0.00015%
铅(Pb)	7439-92-1	＜0.005%
铁(Fe)	7439-89-6	0.005-0.0059%
纯镍(Ni)	7440-02-0	0.054-0.063%
纯锡(Sn)	7440-31-5	6.2 %

2．危害辨认资料	
严重危害效应	健康危害效应：本产品在固体时不具健康危害及危害
	环境影响：本产品在固体时对环境不具影响
	物理性及化学性危害:固体/无味/多色
	特殊危害：固体时（防火或高温）无特殊危害
主要症状：无	

3．急救措施	
急救方法	吸入：无吸入
	皮肤接触：接触无危害
	食入：无食入
主要症状及危害效应：无	

4．灭火措施
通用灭火器：二氧化碳，泡沫，干粉化学灭火器，水雾等
灭火时可能遭遇之特殊危害：会引起火灾
消防人员之特殊防护装备：使用从氧式吸防护具

5．泄漏处理方法
个人应注意事项：注意工作台面清洁，作业时及时清洗手
环境注意事项：将泄漏之物料以容器盛装以便回收或废弃
清理方式：工作台面每天作业前/后须檫试干净，建议可以戴手套或手指套作业

6．安全处置与储存方法
处置：废弃物可送到政府许可的废弃物处理中心进行处理

储存：空调仓，23±5℃，湿度 65%以下，仓库里面安装灭火器	
7. 暴露预防措施	
个人防护设备	呼吸防护：口罩，一般无此要求，可以建议采用
	手部防护设备：手套火手指套，一般无此要求，可以建议采用
	眼睛防护：安全目镜或眼镜
	皮肤及身体防护：穿工作服，经常勤洗
卫生措施：建议使用安全目镜，进食前应洗手及脸部，平时多运动，保持健康体力	
8. 物料及化学性质	
物质状态：固体	形状：连接器
颜色：多色	气味：无味
PH 值：未测定	沸点：未测定
分解温度：未测定	爆炸介限：无
自然温度：固体无	溶解度：固体无
9. 安全性及反应性	
安全性：正常状态下安全	
特殊状况下可能之危害反应：无	
应避免之状况：避免接触火源和太阳光直照射	
应避免之物质：火和酸碱性物质	
危害分解物：无	
10. 毒性资料	
急毒性	吸人：无
	皮肤接触：无
	眼睛：无
局部效应：无	特殊效应：无
11. 废弃物处理方法：废弃物可送到政府许可的废弃物处理中心进行处理	
12. 运送资料	
联合国编号：无	运输规定：并无危险分类
运送方法及注意事项：勿重压，轻拿轻放	
13. 适用法规：1.劳工安全卫生设施规划；2.危害物及有害物通讯规划；3.索尼环境通用规定；4 劳工用业环境空气中有害物容许溶度标准；5 道路交通安全规划	
14. 其他资料：	
15.法规资料	
适用法规	1.劳工安全卫生设施规则 2.RoHS 法规及有害物通识规则
16.其它资料	
参考文献	有害化学物质中文资料库，环保局
制表单位	浙江联和电子有限公司
制造商及供应商地址	浙江省温州乐清市乐清湾港区创新路8号
电话	0577-62383699
制表者	季育文
制表日期	2021-3-23

编号：LHE-S006

成品 MSDS

1．物品成分与厂商资料	
厂商名称：浙江联和电子有限公司	物品编号：LHE-WF1001
	物品名称：黄铜镀锡针
地址：浙江省温州乐清市乐清湾港区创新路8号	纯物质：
联络电话：0577-62383699	危害物质成分（%）无

2.成份辨识资料		
成份名称	化学文摘社登记号码(CAS No.)	浓度范围（成分百分比 Percentage (%)
铜(Cu)	7440-50-8	64.9%
磷(P)	7723-14-0	0.001%
锌(Zn)	7440-66-6	余量
镍(Ni)	7440-02-0	0.01%
锑（Sb）	7440-36-0	0.001%
铅(Pb)	7439-92-1	＜0.009%
铁(Fe)	7439-89-6	＜0.1%
纯镍(Ni)	7440-02-0	0.05%
纯锡(Sn)	7440-31-5	0.1%

2．危害辨认资料	
严重危害效应	健康危害效应：本产品在固体时不具健康危害及危害
	环境影响：本产品在固体时对环境不具影响
	物理性及化学性危害:固体/无味/多色
	特殊危害：固体时（防火或高温）无特殊危害
主要症状：无	

3．急救措施	
急救方法	吸入：无吸入
	皮肤接触：接触无危害
	食入：无食入
主要症状及危害效应：无	

4．灭火措施
通用灭火器：二氧化碳，泡沫，干粉化学灭火器，水雾等
灭火时可能遭遇之特殊危害：会引起火灾
消防人员之特殊防护装备：使用从氧式吸防护具

5．泄漏处理方法
个人应注意事项：注意工作台面清洁，作业时及时清洗手
环境注意事项：将泄漏之物料以容器盛装以便回收或废弃
清理方式：工作台面每天作业前/后须檫试干净，建议可以戴手套或手指套作业

6．安全处置与储存方法
处置：废弃物可送到政府许可的废弃物处理中心进行处理

储存：空调仓，23±5℃，湿度 65%以下，仓库里面安装灭火器	
7. 暴露预防措施	
个人防护设备	呼吸防护：口罩，一般无此要求，可以建议采用
	手部防护设备：手套火手指套，一般无此要求，可以建议采用
	眼睛防护：安全目镜或眼镜
	皮肤及身体防护：穿工作服，经常勤洗
卫生措施：建议使用安全目镜，进食前应洗手及脸部，平时多运动，保持健康体力	
8. 物料及化学性质	
物质状态：固体	形状：连接器
颜色：多色	气味：无味
PH 值：未测定	沸点：未测定
分解温度：未测定	爆炸介限：无
自然温度：固体无	溶解度：固体无
9. 安全性及反应性	
安全性：正常状态下安全	
特殊状况下可能之危害反应：无	
应避免之状况：避免接触火源和太阳光直照射	
应避免之物质：火和酸碱性物质	
危害分解物：无	
10. 毒性资料	
急毒性	吸人：无
	皮肤接触：无
	眼睛：无
局部效应：无	特殊效应：无
11. 废弃物处理方法：废弃物可送到政府许可的废弃物处理中心进行处理	
12. 运送资料	
联合国编号：无	运输规定：并无危险分类
运送方法及注意事项：勿重压，轻拿轻放	
13. 适用法规：1.劳工安全卫生设施规划；2.危害物及有害物通讯规划；3.索尼环境通用规定；4 劳工用业环境空气中有害物容许溶度标准；5 道路交通安全规划	
14. 其他资料：	
15.法规资料	
适用法规	1.劳工安全卫生设施规则 2.RoHS 法规及有害物通识规则
16.其它资料	
参考文献	有害化学物质中文资料库，环保局
制表单位	浙江联和电子有限公司
制造商及供应商地址	浙江省温州乐清市乐清湾港区创新路8号
电话	0577-62383699
制表者	陈浙海
制表日期	2021-3-23

SAFETY DATA SHEET（SDS）

Issued: December 3 , 2015
Revised: March 9 , 2016

FileNo. 4052-1

1.Chemical Product & Company Identification

CHEMICALPRODUCT NAME:	LAPEROS® E130i VF2201
NAME OF COMPANY:	Polyplastics Co.,Ltd.
ADDRESS:	2-18-1 Konan, Minato-ku, Tokyo,108-8280 Japan
SECTION IN CHARGE:	Quality Assurance Dept.
TELEPHONE NUMBER:	03-6711-8605
FACSIMILE NUMBER	03-6711-8616

2. Hazards identification

[GHS CLASSIFICATION]

Physical and Chemical Hazards : ・Flammable solids : Classification not possible
・Self-reactive substances and mixtures : Not applicable
・Pyrophoric solids : Not classified
・Self-heating substances and mixtures : Not classified
・Substances and mixtures, which in contact with water, emit flammable gases : Not classified
・Oxidizing solids : Not classified
・Corrosive to metal : Not classified

Health Hazards : ・Carcinogeneses : No hazard
・Specific target organ/systemic toxicity (Repeated exposure) : No hazard

[GHS CLASSIFICATION]

Environmental Hazards : No hazard

[SYMBOL] : None

[SIGNAL WORD] : None

[HAZARD STATEMENT] : None

[PRECAUTIONARY STATEMENTS]

Prevention : ・Wash hands thoroughly after handling.
・Wear protective gloves.

Response : –

Storage : Avoid direct sunlight and store in a well-ventilated place.

Disposal : Dispose of contents/container in accordance with local & national regulations.

3. Composition/information on ingredients

SUBSTANCE/PREPARATION	: Preparation
COMMON CHEMICAL NAME	: Aromatic Liquid Crystal Polymer
SYNONYMS	: Aromatic Liquid Crystal Polymer(LCP)
INGREDIENTS AND COMPOSITION	: LCP ≧69%, Glass fiber 30%, Others ≦1%
CHEMICAL FORMURA	: not open
SERIAL No. IN OFFICIAL GAZETTE	: 7-2577(base resin) (Law Concerning Examination and Regulation of Manufacture, etc. , of Chemical Substances)
CAS №.	: 147310-94-9(base resin)
INGREDIENTS CONTRIBUTING TO THE HAZARD	: Cadmium, lead, hexavalent chromium and mercury are not used in this grade.

4. First-aid measures

INGESTION : When a gas generated from the molten polymer has been inhaled, move to area of fresh air without delay and wait until the victim is recovered. If sick feeling continues, ask a physician for advice.

SKIN CONTACT : Cool the contacted skin with clean water without delay, if a contact with the polymer in a molten form. Do not force to remove the solid resin on the skin. If any burns are observed on

		the skin, ask a physician for advice.
EYE CONTACT	:	Cool and rinse the eye with clean water for at least 15 minutes when the eyes had contact with molten polymer. In case of wearing contact lenses, remove the lenses as soon as possible, and ask a physician for advice. When the eye had contact with the polymer in an ordinary solid form, rinse the eye with clean water without delay. If the discomfort persists, ask a physician for advice.
SWALLOW	:	Help to vomit as much as possible. If sick feeling continues, and ask a physician for advice.

5. Fire-fighting measures

EXTINGUISHING MEDIA	:	Water, foam fire-extinguishing agent, powder fire-extinguishing agent, and carbon dioxide gas.
SPECIFIC METHODS	:	Extinguish the fire with water. A method of extinguishing an ordinary fire may be applied. Do not apply water directly to processing machines.
SPECIFIC HAZARDS	:	Incomplete combustion leads to generation of toxic gases such as carbon monoxide or phenol, in addition to carbonic acid gas and water.
SPECIAL PROTECTIVE EQUIPMENT FOR FIREFIGHTERS	:	In case the fire gained force, use a gas mask or other protective equipment.

6. Accidental release measures

PERSONAL PRECAUTIONS	:	When pellets were spilled on the road or floor, wipe them off with a besom or cleaner not to cause slipping.
ENVIRONMENTAL PRECAUTION	:	Handle the spillage in accordance with provisions given in the "Resin pellet spillage preventive manual", in order to prevent intakes by marine animals and birds.

7. Handling and storage

HANDLING	:	LCP polymer in a pellet form will neither ignite nor explode at room temperatures.
HANDLING 2	:	This pellets spilled on the floor are likely to cause slipping. Remove such spillage at any times.
HANDLING 3	:	For molding work, effective means for local exhaust are required to discharge gases generated by melt processing.
HANDLING 4	:	Avoid inhaling of gases generated in molding work. Do not directly touch resin of high temperature.
HANDLING 5	:	Avoid retaining hot resin in the processing machines for many hours.
HANDLING 6	:	Glass fibers are not generally exposed in a single substance under normal processing and handling conditions as they are compounded in pellets. However, the following measures will be necessary to minimize the exposure to glass fibers or dusts containing glass fibers, when pellets or molded parts containing glass fibers are cut, ground or burnt, depending on environmental and operational conditions. ・Those who are sensitive in skin to glass fiber should wear suitable(protective) clothes to minimize the exposure of their skin. ・Wash working clothes apart from other laundry, so that the latter will not cause contamination with glass fibers. ・Provide the workshop with partitions to prevent diffusion of glass fiber dusts. ・Pay precautions not to rub face, neck or arms with hands. Wash hands and gargle after working without fall. ・Keep dust sources totally enclosed.

		・Provide local air exhausters and implement periodical inspections and adjustments at least once a year. ・Reduce cutting and grinding processes to the possible minimum, and devise working procedures to minimize dust generation. ・Provide dust-preventive masks, protective glasses and gloves for personal hygiene. ・Determine the operational environment at indoor working places and confirm the effects of environmental improvement. Note) Glass fibers are, like road dusts, told to be least hazardous to human bodies, but proper measures are required to avoid useless inhaling.
STORAGE	:	Keep the substance away from any fire or heat sources for the sake of safe storage.
STORAGE 2	:	Handle in accordance with municipal rules and regulations.
RECOMMENDED PACKAGING MATERIALS	:	No information.

8. Exposure controls/ personal protection

CONTROL CONCENTRATION	:	None at present
PERMISSIBLE CONCENTRATION	:	OSHA PEL/1985 Max. permissible concentration of inactive powder 15mg/m3 - ditto - (Aspiration) 5 mg/m3 ACGIH TLV/1992 1993 Exposure limit of the powder TWA 10 mg/m3
ENGINEERING MEASURE	:	・When handling dust: Use totally enclosed containers resisting dust explosion. ・When heat melted in molding: Effective local ventilation must be provided.
PERSONAL PROTECTIVE EQUIPMENT		
RESPIRATORY PROTECTION	:	Wear a dust-proof mask.
HAND PROTECTION	:	Wear heat-resisting gloves against burns, when handling molten polymer.
EYE PROTECTION	:	Wear protective glasses or goggles.
SKIN & BODY PROTECTION	:	Wear long sleeve clothes against burns, when handling molten polymer.

9. Physical and chemical properties

APPEARANCE etc.	:	Pellet
BOILING POINT	:	Not applicable
VAPOUR PRESSURE	:	Not applicable
VOLATILITY	:	Not applicable
INITIAL BOILING POINT	:	Not applicable
SUBLIMATION	:	None
MELTING POINT	:	335℃~345℃
DENSITY	:	1.61
SOLUBILITY	:	Insoluble in water
FLASH POINT	:	No finding
IGNITION POINT	:	540℃ or higher
EXPLOSION PROPERTY	:	Not applicable
INFLAMMABILITY	:	It is flammable, but shows self-fire extinguishing characteristics when kept away from flame.
REACTIVITY WITH WATER	:	None
OXIDIZABILITY	:	None
SELF-REACTIVITY	:	None
DUST EXPLOSIVENESS	:	No finding

10. Stability and reactivity

STABILITY AND REACTIVITY	:	Stable for normal storage or handling.

11. Toxicological information

SKIN CORROSION/IRRITATION	:	No finding.
SERIOUS EYE DAMAGE/IRRITATION	:	Gas generated in drying or melting is irritating eyes and skins.
RESPIRATORY OR SKIN SENSITISATION	:	No finding
ACUTE TOXICITY(INCLUDING LD50)	:	No finding.
SUBACUTE TOXICITY	:	No finding.
CHRONIC TOXICITY	:	No finding.
CARCINOGENECITY	:	No finding.
MUTAGENECITY(Micro organisms, chromosomal aberration)	:	No finding.
REPRODUCTIVE TOXICITY	:	No finding.
TERATOGENICITY	:	No finding.
OTHERS(Including generation of hazardous gases by reaction with water, for example)	:	No finding in this report means that there will be no hazard in general, but no proving data available at the time of reporting.
OTHER CAUTIONS	:	With regard to dust, the maximum permissible concentration and limits are fixed by OSHA and ACGIH.
OTHER CAUTIONS 2	:	Information on hazards of glass fibers as filler.

〈Effects on Human Bodies〉

(1) Effects on skin

Stimulation to the skin with glass fibers may be caused when glass fibers diameter is larger than 4.5~5 μm. They give mechanical stimulation followed by itchiness to the skin, but further continuous exposure reportedly results in extinction of stimulation. It may sometimes leads to irritable dermatitis complicated with urticaria or eczema-like reaction. It is, however reported that such dermatitis is not so serious in general and does not last too long. Therefore, skin stimulation can be prevented by proper use of glass fibers.

(2) Effects on Tumor

Investigations made on glass fibers till today reveal that there is neither increase in mortality of glass fiber production workers due to lung cancer or mesothelioma nor such cases reported.

〈Animal Test Report〉

It is suggested that carcinogenecity of mineral fibers is dependent on their shapes rather than on their constituents. According to a report on experiments using 17 kinds of artificial mineral fibers in various sizes prepared by Dr.Stanton of National Cancer Institute, in USA, statistical studies on correlations between the diameter and length of fibers and the coincidence of mesothelioma have revealed that mineral fibers having a diameter smaller than 0.25 μm and a length larger than 8 μm are closely related to the coincidence of cancers. Since these experiments were performed by artificially dosing the subject animals with a large quantity of glass fibers and consequently they are quite different from the actual exposures to human bodies, it is told to be problematic to make a conclusion that mineral fibers are hazardous to human health, basing on the results obtained from these experiments. Up to the present time, there is no result obtainable to demonstrate a mechanism of glass fibers causing lung cancers in spite of experiment by long exposure to glass fibers with high concentration.

12. Ecological information		
BIODEGRADABILITY	:	No finding.
BIOACCUMULATION	:	No finding.
FISH TOXICITY	:	No finding.
HAZARDS TO OZONE LAYER	:	None
13. Disposal considerations		
WASTE FROM RESIDUES	:	This is designated as waste plastics among industrial wastes by the Wastes Disposal Law. Disposal waste pellets through licensed wastes handlers or local autonomous bodies if they are handling wastes disposal.
WASTE FROM RESIDUES 2	:	When disposed by incineration, use the well controlled incinerators in accordance with the Wastes Disposal Law, Air Pollution Control Law and Water Pollution Prevention Law.
14. Transport information		
UN CLASSIFICATION NUMBER	:	Not applicable
OTHER CAUTIONS	:	Handle with care so as not to give damages to containers or not to be subjected to wetting.
OTHER CAUTIONS 2	:	Secure the containers firmly so as not to cause collapsing.
15. Regulatory information		
WASTE DISPOSAL LAW	:	Waste plastics among industrial wastes.
16. Other information		
HANDLING OF THE DETAILS GIVEN ABOVE	:	This SDS is the English version translated from the Japanese SDS which is prepared for domestic use. Details given above are based on references, information and data available at this moment, but no warranty can be made on exactness of these details. They are also prepared on the assumption that the product will be handled in a normal way. For special handling, adequate safety and environmental measures should be taken in respect to its applications. Our products are not specifically intended for implants for medical and dental applications, and therefore they are not recommended for such applications. "No finding" in this report means that there will be no hazard in general, but no proving data is available at the time of reporting.
WHERE TO CALL FOR FURTHER INFORMATION	:	Polyplastics Co. , Ltd. Quality Assurance Dept. Tel. No 03-6711-8605

*LAPEROS® is a registered trademark of Polyplastics Co., Ltd. in Japan and other countries.

反馈与建议：