产品合格证

产品合格证

检 验 员: 检 07

出厂日期: 见产品或包装

本产品经检验合格, 准予出厂。

欣灵电气股份有限公司 XINLING ELECTRIC CO.,LTD

欣灵电气股份有限公司
XINLING ELECTRICAL CO.,LTD.
Address: No. 328, Weishi 19th Road, Yueqing Economic Development Zone, Zhejiang Province
Tel: 0577-6273 5353 Fax: 0577-6272 29630fficial
Website: www.xinling.com E-mail: C-Lin@xinling.com
Technical Consultation: 400-8236-775

RECYCLABLE

欣灵

使用说明书
Products Instructions

C6-F Series

Multifunctional Dual Digital Display Fiber Optic Sensor

Thank you very much for using C-Lin brand sensors. Please read the instruction manual before using the product!

13A015R1

Thank you for choosing Xinling products. We sincerely express our gratitude.When using, please be sure to comply with the following:
◆Please have operations performed by experts with electrical knowledge.
◆Please read this instruction manual carefully and use the product correctly on the basis of full understanding.
◆Please keep this instruction manual properly for future reference at any time.

Safety Precautions

●Meaning of Warning Labels

⚠ Caution	If used improperly, it may cause minor injuries, moderate injuries, or property damage.

●Warning Labels

⚠ Caution	
Do not use this product directly or indirectly for human body detection for safety purposes. Also, do not use it in detection devices for human body protection.	
There is a risk of malfunction or fire. Do not exceed the rated voltage during use.	
There is a risk of breakage. It is strictly prohibited to use under AC power supply.	

Safety Points

To ensure your safety, please be sure to comply with the following. Otherwise, it may cause damage or fire.

♦Do not use in the following environments.
① Places exposed to direct sunlight
② Places with high humidity and prone to condensation
③ Places with corrosive gases
④ Places where vibration or impact exceeds the rated range
⑤ Places with splashes of water, oil, chemicals, etc.
⑥ Places exposed to steam
⑦ Places with strong electric fields or strong magnetic fields

♦Do not use in environments with flammable or explosive gases.
♦Do not use in environments beyond the rated range.
♦Please install the sensor far away from high-voltage or power equipment to avoid danger during operation or maintenance.
♦Please route the sensor cables separately from high-voltage lines and power lines. If they are routed in the same cable or in the same trunking, mutual induction will occur, causing malfunctions or damage.
♦Please ensure that the load is used within the rated range. Otherwise, it may cause damage or fire.
♦Do not short-circuit the load. Otherwise, there is a risk of damage or fire.♦Please connect the load correctly.
♦Please pay attention to the polarity of the power supply to prevent wrong wiring.
♦Do not use when the case is damaged.
♦It may cause burns. The surface temperature of the sensor will rise depending on the operating conditions (ambient temperature, power supply voltage, etc.), so please be careful when operating or cleaning.
♦Please stop the device when setting the sensor and confirm safety before performing operations.
♦Be sure to cut off the power supply before installing or removing wires.
♦Do not disassemble, repair, or modify this product without authorization.
♦When disposing, please handle it as industrial waste.

Precautions for Use

♦When installing on a DIN rail, push the amplifier until the hook is fully inserted into the rail.
♦Please ensure the extension wire is within 100m. Use wires with a cross-sectional area of 0.3mm² or more for extension wires.
♦Please ensure the force applied to the wire part is within the following ranges:Tensile force: ≤ 40N, Torque: ≤0.1N · m, Compressive force: ≤20N, Bending force: ≤294kg
♦Detection is possible 200ms after power is turned on.
♦When an excessive received light quantity is detected, the anti-mutual interference function may fail to work fully, leading to malfunctions. In such cases, please increase the set threshold.
♦When the fiber unit is fixed to the amplifier unit, do not forcibly apply tensile force, compressive force, etc. to it.
♦Be sure to install the protective cover before use; otherwise, misoperation may occur.
♦Do not use thinners, gasoline, acetone, or kerosene-based solvents for cleaning.
♦After power is turned on, due to different surrounding environments, it may take some time for the received light quantity/measured value to stabilize.
♦In case of any abnormality, please immediately cut off the power supply, stop using the product, and contact our company.

Confirmation of Package Contents

♦1 Amplifier Unit♦1 Card Slot

1 Setting

1-1 Outline Dimension Drawing

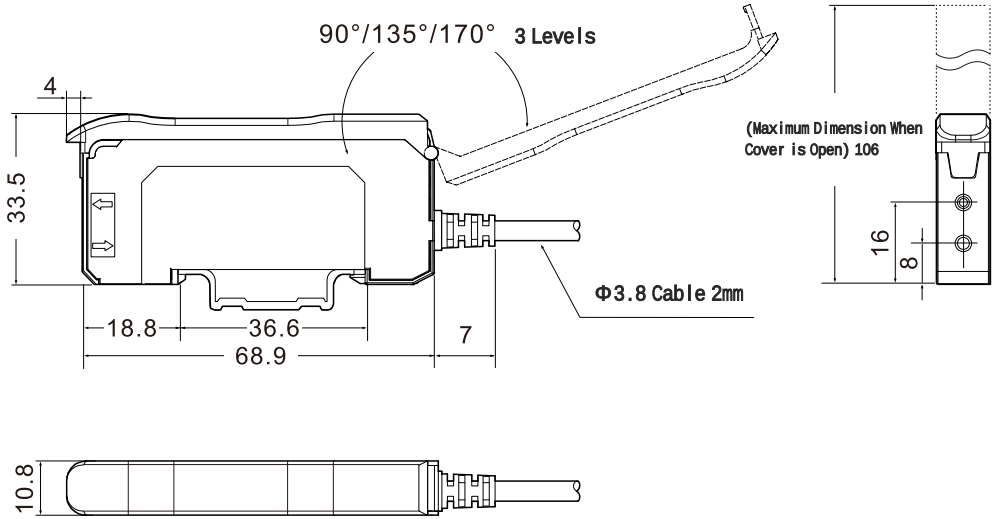

1-2 Installation of Amplifier Unit

♦Installation Method of Amplifier (35mm Wide DIN Rail)
① Insert the rear part of the mounting section into the 35mm wide DIN rail.
② While pressing the rear part of the mounting section against the 35mm wide DIN rail, insert the front part of the amplifier into the 35mm wide DIN rail.

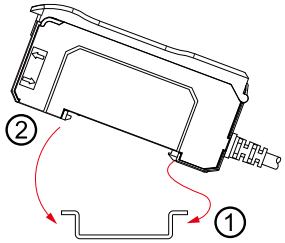

35mm Wide DIN Rail

Installation Method of Amplifier (Mounting Bracket)
① Fix the mounting bracket.
② Insert the rear part of the mounting section into the mounting bracket.
③ While pressing the rear part of the mounting section against the mounting bracket, insert the front part of the amplifier into the mounting bracket.

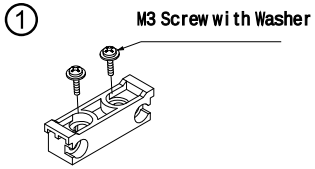

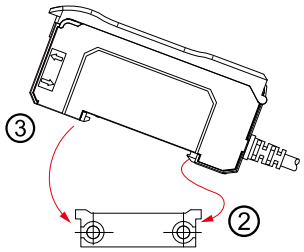

Mounting Bracket

④When installing with screws, please use M3 screws with washers and set the tightening torque to ≤0.5 N · m.

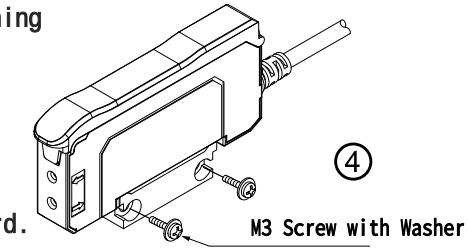

· Disassembly Method of Amplifier
①Hold the amplifier and push it forward.
②Lift the front end of the amplifier to disassemble it.

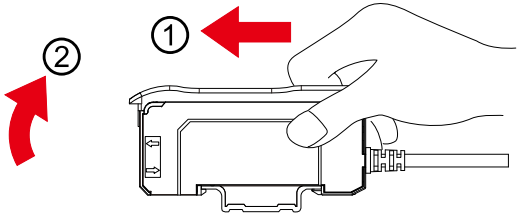

(Note 1): If you lift the front end without pushing the amplifier forward, the hook at the rear end of the mounting part may be damaged. Please be careful.

1-3 Installation of Fiber Unit

♦Usage Method of Fiber Cleaver

① Insert the fiber unit into the cutting hole of the fiber cleaver. For standard fiber units, insert to the desired cutting position. For thin-diameter fiber units, insert to the deepest position.
② Press down the cutting blade in one go to perform cutting.

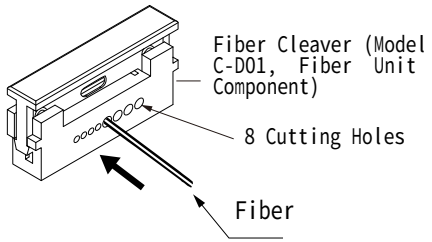

♦Installation of Fiber

① Press down the fiber lock lever.
② Slowly insert the fiber from the insertion port until it can no longer move (Note 1).
③ Reset the fiber lock lever until it can no longer move.

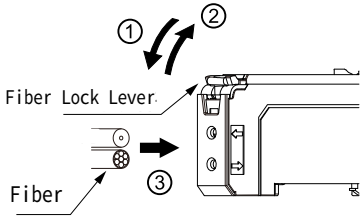

(Note 1): Incomplete insertion of the fiber will shorten the detection distance. Please note. When inserting bend-resistant fibers, they may bend, so insert them carefully.
(Note 2): When using coaxial reflective fibers, insert the central fiber (single-core) into the light-emitting part. Reversing the installation will reduce detection accuracy. Please note.

2 Maintenance

2-1 Troubleshooting

●Troubleshooting

Fault	Cause	Countermeasure
Blank Display on Screen	Power not connected or wire broken.	Please check wiring, power voltage and power capacity.
No Digital Display	Power-saving function is ON.	Please turn off the eco-friendly function.
Unclear Setting	–	Please perform setting initialization.

● Error Display

Fault	Cause	Countermeasure
ProoucEr	Overcurrent in control output	Please check the load of control output and set it within the rated range.Please check if the load is short-circuited.

2-2 Input/Output Circuit Diagram

NPN Input and Output Circuit Diagram

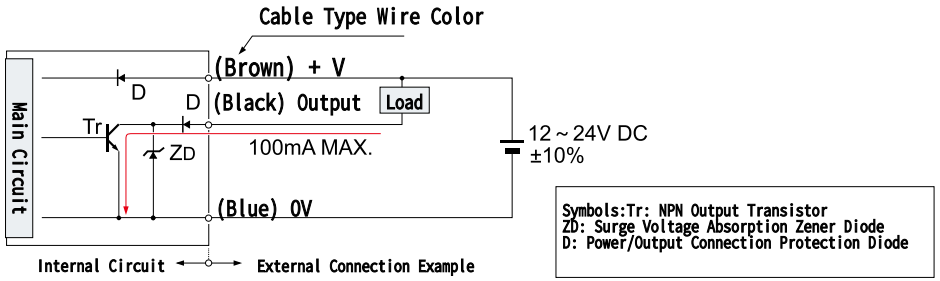

PNP Input and Output Circuit Diagram

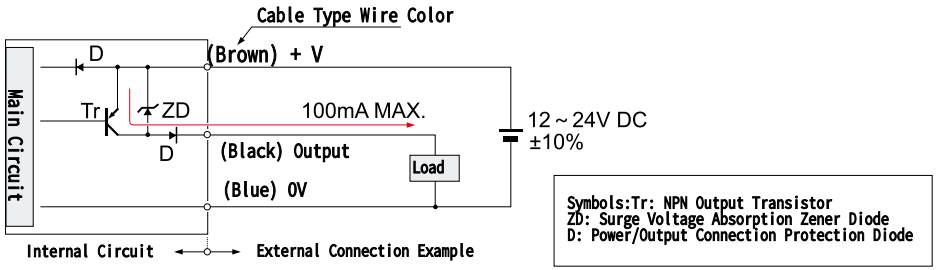

2-3 Ratings/Specifications

Item / Type / Model	Category
NPN	C6-F21
PNP	C6-F21P
Light Source (Emission Wavelength)	Red Modulated Light 625nm
Supply Voltage	DC12~24V±10% Ripple (P-P) ≤10%
Power Consumption/Current Draw	≤30mA
Output Mode	NPN Open Collector/PNP Open Collector
Switching Mode	L. on (Light-on Operation)/D. on (Dark-on Operation) Configurable
Response Time	Standard Mode 200μs, Long-distance Mode 24ms, High-speed Mode 25μs
Timer Function	On-delay, Off-delay, ONE SHOT Timer
Timing Range	1～9999ms
Practical Functions	Parameter Initialization/Button Lock/Two Threshold Points, Full-auto and Manual Setting
Advanced Functions	Baseline Tracking, Adjustable Emission Frequency to Prevent Mutual Interference, Offset Setting, Area Detection
Ambient Temperature	-20°C～55°C
Ambient Humidity	35～85%RH
Protection Circuit	Surge Protection Circuit, Short-circuit Protection, Polarity Reverse Protection
Shock Resistance	500m/s², X、Y、Z , 2 Hours Each in X, Y, Z Directions
Vibration Resistance	10~55Hz, Full Amplitude 1.5mm, 2 Hours Each in X, Y, Z Directions
Connection Method	Lead-out Type (Standard Cable Length 2m)
Material	PC

3 Setting

3-1 Operation and Display Overview

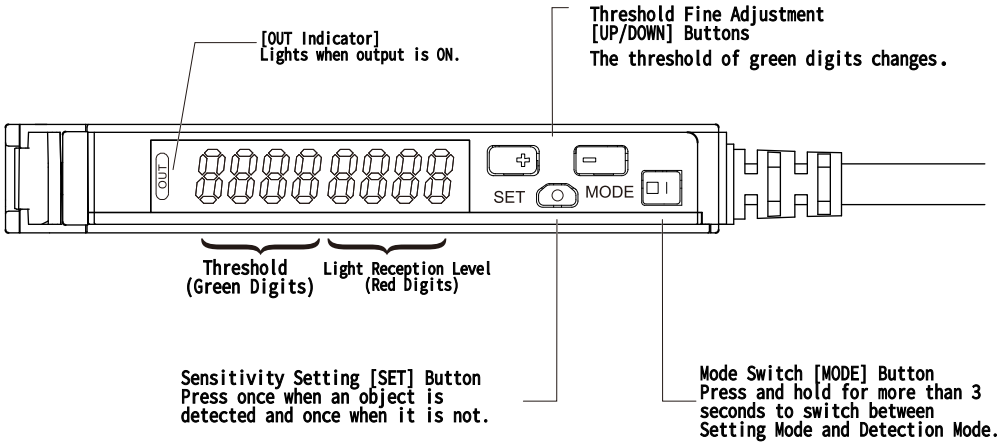

3-2

① When the Detected Object Can Be Set

● 2-Point Teaching

1.In the state with the detected object, press the SET button once.

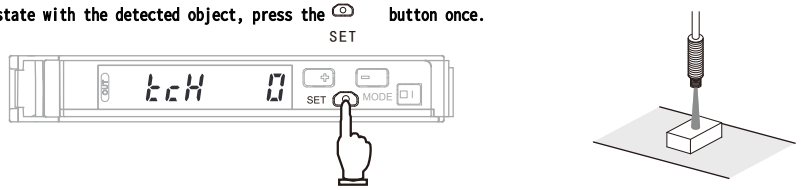

2.In the state without the detected object, press the SET button again.

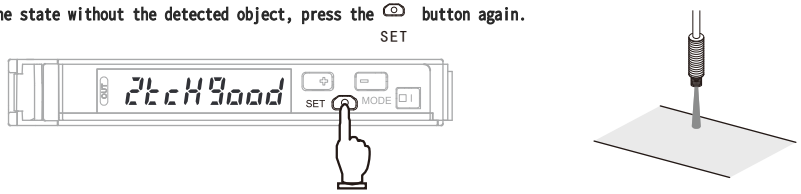

➡ Setting Completed

When detection is stable, [2tcH9ood] is displayed; when detection is unstable, [2tcHHRrd] is displayed.Threshold Setting: Set to the intermediate value of the light reception levels at State 1 and State 2.

Note 1: The order of 1 and 2 can be reversed.

②When the Detected Object Cannot Be Set

● Limited Teaching

1.In the state with or without the detected object, press the SET button once.
2.Press the UP button again to adjust to a higher reference value (low sensitivity) side, or press the DOWN button to adjust to a lower reference value (high sensitivity) side.

Note 1: The initial value of the offset is 10%. The offset can be switched to percentage display [approx. 0 ~ 999% (in 1% increments)] or numerical display [approx. 0 ~ 9999 (in 1 increments)].
For the setting method of the offset, please refer to <5. Offset Setting> in “5. Detailed Setting”.

Through-beam Type: State with Detected Object

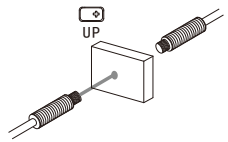

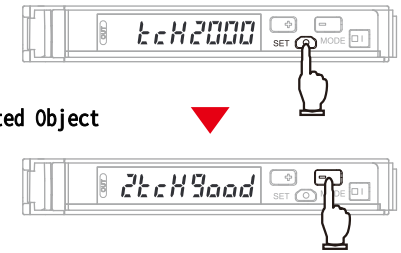

Reflective Type: State without Detected Object

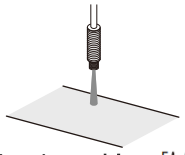

➡ Setting Completed

When detection is stable, [LtcH9ood] is displayed; when detection is unstable, [LtcHHRrd] is displayed.

③ When the Detected Object Cannot Be Stopped

● Automatic Teaching

1.In the state without the detected object, press the SET button once, and the green digits display [tcH].
2.During the process of passing the detected object, press the SET button again. After the green digits display [Auto], press and hold for more than 3 seconds, then release the SET button.

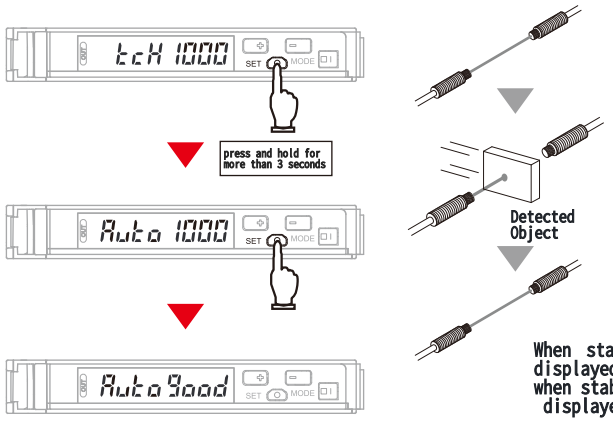

Light Reception Level Setting: Adjust the maximum light reception level at State 1 to the light level adjustment grade.
Threshold Setting: Set to the intermediate value between the maximum and minimum light reception levels at State 1.

When stable detection is possible [AutoGood] is displayed;
when stable detection is not possible [AutoHRrd] is displayed.

➡ Setting Completed

3-4 Detailed Settings

1、 UP/DOWN Use the **UP/DOWN** buttons to set.

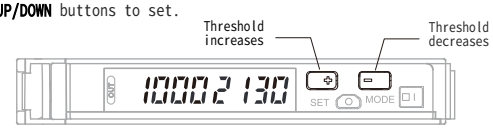

Note: You can press and hold the button for high-speed adjustment

4 Convenient Settings

① Want to prevent misoperation!

● Key Lock

Disable the operation function of all buttons. When the button is pressed, [clo on] will be displayed.

■ Execution/Release (Same Step)

1.Press and hold the SET and MODE buttons simultaneously for more than 3 seconds to activate the key lock.

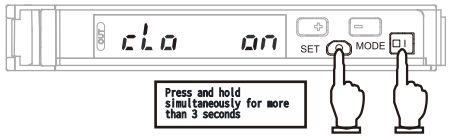

2.Press and hold the SET and MODE buttons simultaneously to activate the key lock.

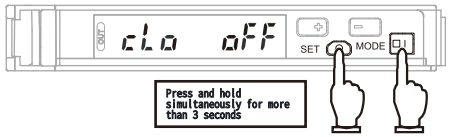

② Want to Detect Within a Certain Range

● Area Detection

1.Enable the "Area Mode" function in the setting mode and exit the setting mode.

2.Use the MODE button to switch between setting the lower threshold [L] and the upper threshold [H].

■ Setting of Lower Threshold [L]

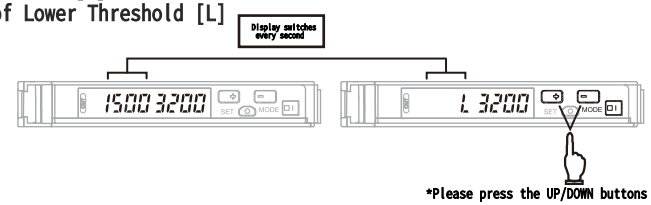

*Please press the UP/DOWN buttons to set the threshold

■ Setting of Upper Threshold [H]

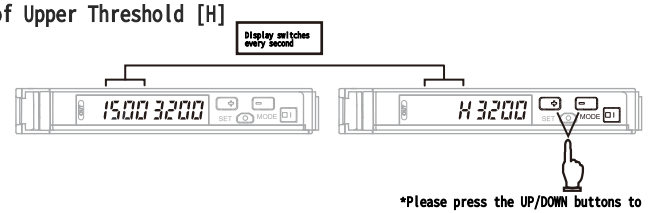

*Please press the UP/DOWN buttons to set the threshold

Note:
1.The minimum difference between the set values of L and H should be ≥200.
2.When the Area Mode is enabled, the "3-3. Intelligent Adjustment" and the <11. Reference Value Tracking> function in the function settings are disabled.

5 Section 5 Detailed Settings

Press and hold the MODE button for more than 3 seconds to switch to the setting mode.The content displayed during function migration is the factory-set content.

Note: In the setting mode, under any menu, press and hold the MODE button for more than 3 seconds to exit the setting mode.

Function Setting

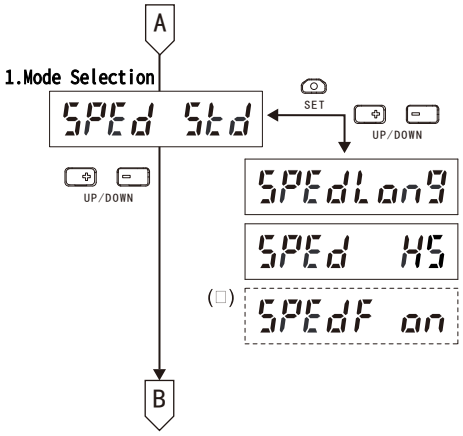

Function Description

When you want to change the light quantity and response time

	Detection Function	Response Time	Display Value
(a)	STD Standard Mode	200us	Up to 4000
(b)	Long Distance Mode	24ms	Up to 9999
(c)	HS High-Speed Mode	25us	Up to 2000

The detection function mode can be set via the SET button.

Note: Displaying "SPEdF on" indicates that the frequency-differentiating function has been enabled. If mode adjustment is needed, this function must be disabled first.

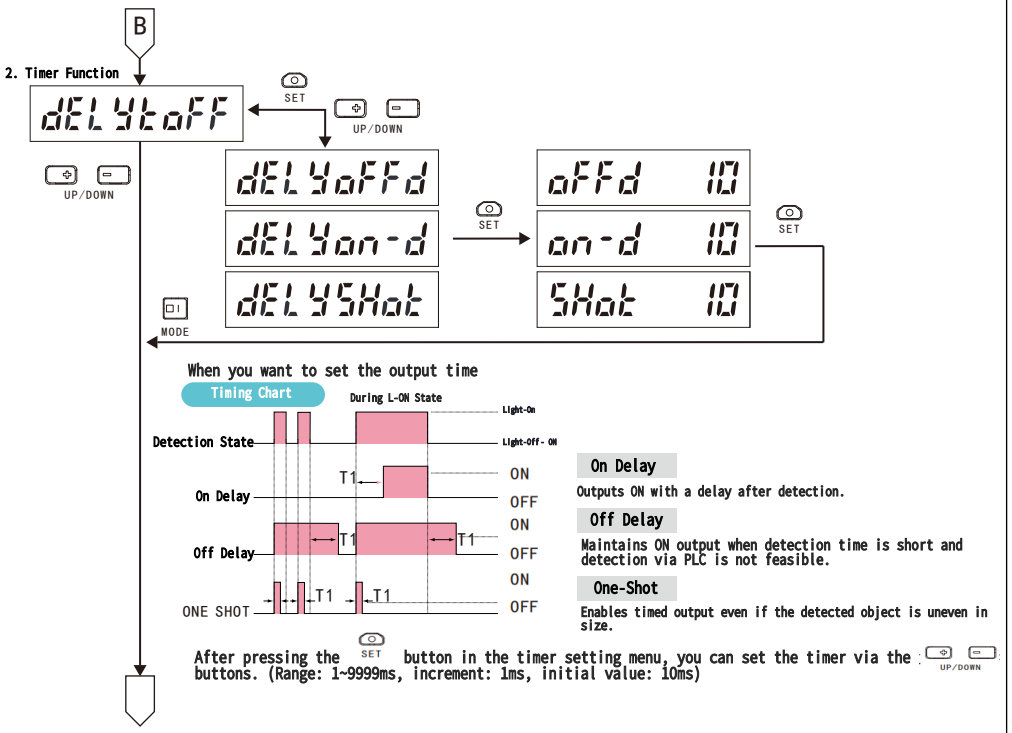

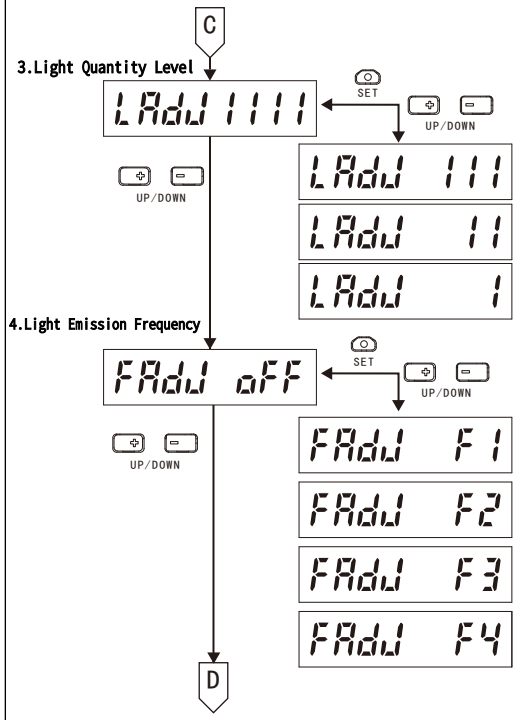

When you want to modify the target value of received light quantity (light quantity adjustment level), you can adjust the light quantity level via the UP/DOWN buttons.

The light quantity adjustment level can be set via the SET button.

When you want to change the frequency:
To prevent mutual interference when multiple detected objects are small and close in distance, and sensors are installed adjacent to each other, you can change the frequency to stagger the light emission power and achieve stable detection.

Setting
F1
F2
F3
F4

You can select the light emission frequency via the UP/DOWN buttons.

The light emission frequency can be set via the SET button.

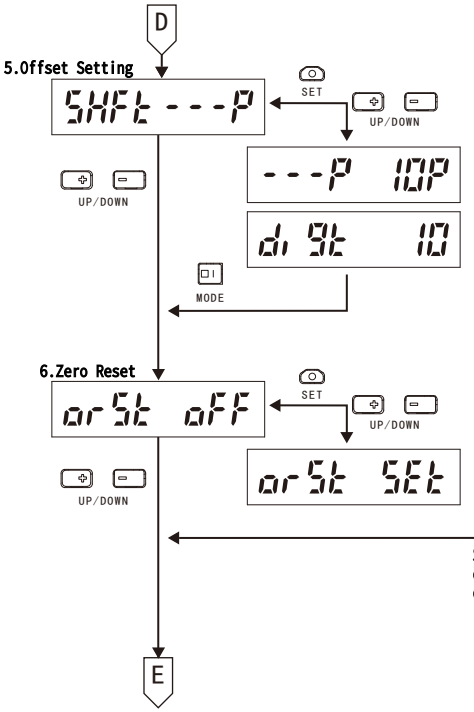

Set the offset of the threshold during limited teaching

[SHFt ---P] : Percentage Mode (Default)

[SHFt di 9t] : Numerical Mode

After pressing the SET button in the mode setting menu, you can set the percentage or numerical value via the UP/DOWN buttons.The offset mode and set value can be set via the SET button.

Set the received light quantity display to "0", set the current position as the origin, and the threshold will change accordingly.

[oFF] : Display Adjustment OFF

[SEt] : Offset (-direction) received light quantity and cancel light deflection.

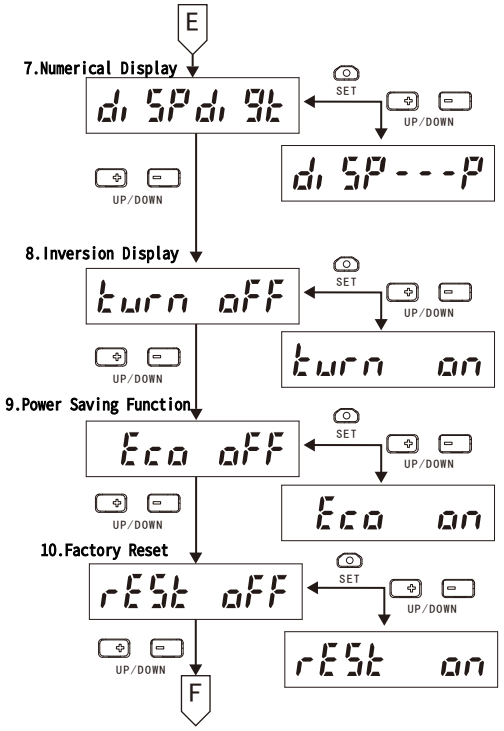

Set the Numerical Display Mode

[di SPdi 9t] : Numerical Display Mode

[di SP---P] : Percentage Display Mode

After pressing the SET button in the mode setting menu, you can select the numerical or percentage display mode via the UP/DOWN buttons. The display mode can be set via the SET button.

To set the display direction of the digital display section, invert the display of the threshold and received light quantity digits. The inversion display can be set via the SET button.

To reduce power consumption:

[Eco on] : Power Saving Mode

After no operation for about 20 seconds, the indicators (green digits, red digits) will turn off (except for the out indicator).The power saving function can be turned on or off via the SET button.

To initialize all settings and restore to the factory state.

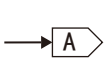

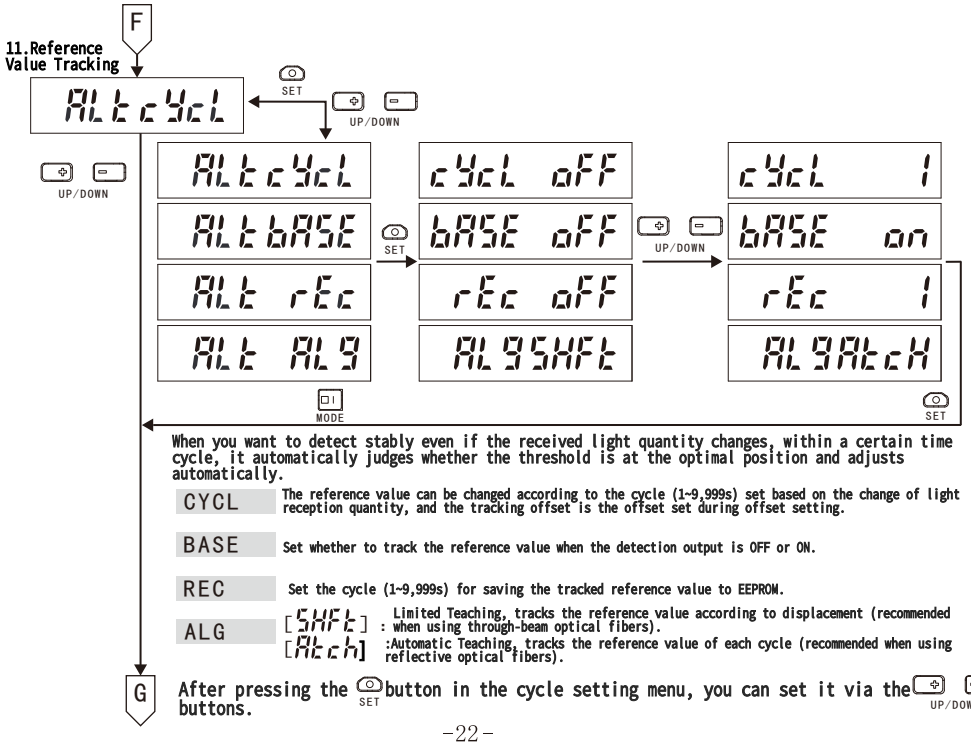

When you want to detect stably even if the received light quantity changes, within a certain time cycle, it automatically judges whether the threshold is at the optimal position and adjusts automatically.

CYCL	The reference value can be changed according to the cycle (1~9,999s) set based on the change of light reception quantity, and the tracking offset is the offset set during offset setting.
BASE	Set whether to track the reference value when the detection output is OFF or ON.
REC	Set the cycle (1~9,999s) for saving the tracked reference value to EEPROM.
ALG	[SHFt] : Limited Teaching, tracks the reference value according to displacement (recommended when using through-beam optical fibers). [AtcH] :Automatic Teaching, tracks the reference value of each cycle (recommended when using reflective optical fibers).

After pressing the SET button in the cycle setting menu, you can set it via the UP/DOWN buttons.

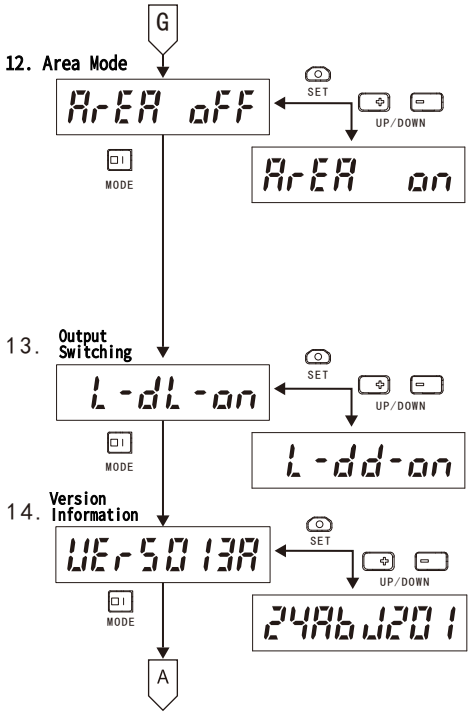

When you want to detect output within a specified range:

Set two thresholds to determine if it is within the specified range.

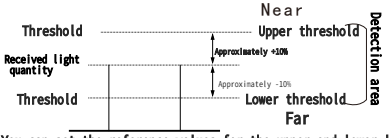

You can set the reference values for the upper and lower limits, and turn the light reception quantity ON/OFF within this range.

The area mode can be turned on or off via the SET button.

Switch between "ON when light is received" and "ON when light is blocked".

Through-beam type: When there is a detected object and you want the product to be ON, set it to "ON when light is blocked".

Reflective type: When there is a detected object and you want the product to be ON, set it to "ON when light is received".

The product version information can be viewed via the SET button.

Precautions

♦Please confirm that wiring is performed with the power supply turned off.
♦Please confirm that the power supply voltage varies within the rated range.
♦If the power supply is provided by a commercial switch regulator, ensure that the power supply rack's grounding terminal (F.G) is grounded.
♦If noise-generating equipment such as switch regulators or conversion engines is used near this sensor, be sure to ground the equipment's grounding terminal (F.G).
♦Do not use the sensor within a short time (0.5s) after the power supply is turned on.
♦The self-diagnostic output is not equipped with short-circuit protection.
♦Do not directly connect capacitors or capacitive loads.
♦Do not run the wiring together with high-voltage wires or power lines, or in the same conduit. This may cause malfunction due to induction.
♦Cables below 0.3mm2 can be extended up to 100m.
♦Avoid dust, dirt, and water vapor.
♦Do not directly contact the sensor with water, oil, grease, or organic solutions such as thinners.

Warranty Period

The product warranty period is one year, starting from the date when the product is delivered to the location designated by the buyer.

Warranty Scope

(1) If a fault caused by Xinling Company occurs within the above-mentioned warranty period, Xinling will repair the product free of charge. However, the following situations are not covered by the warranty:
♦Faults caused by incorrect operation or improper use under the conditions and environment specified in the operation manual, user manual, or technical requirements specifically agreed upon between the buyer and Xinling Company.
♦Faults not caused by product defects, but by the buyer's equipment or software design.Faults caused by modification or repair performed by personnel other than those from Xinling Company.
♦Faults that can be completely avoided by properly maintaining or replacing wearing parts in accordance with the provisions of the operation manual or user manual.
♦Faults caused by unforeseeable changes in scientific and technological levels and other factors after the product is shipped from Xinling Company.
♦Xinling Company is not responsible for warranty for faults caused by natural disasters such as fire , earthquake, and flood, or external factors such as abnormal voltage.

(2) The warranty scope is limited only to the situations specified in Clause (1). Xinling Company shall not be liable for any indirect losses (equipment damage, loss of opportunity, loss of profit, etc.) or other losses caused to the buyer by its equipment.

Product Commitment Letter

Xinling products undergo strict factory inspection. If a fault occurs, please contact Xinling technical personnel and provide detailed information about the fault so that it can be resolved for you as soon as possible.

Product Applicability

The products of Xinling Electric Co., Ltd. are designed and manufactured for general-purpose applications in ordinary industries. Therefore, this product must not be used in the following applications and is not suitable for such use. However, if the buyer, in a responsible manner, consults Xinling Company in advance regarding the product’s use, understands the product’s technical specifications, grades, and performance, and takes necessary safety measures, the product can be used. In such cases, the product warranty scope remains the same as specified above.

♦Use in applications involving potential chemical pollution or electrical hazards, or under conditions and environments not documented in the product catalog, user manual, etc.
♦Nuclear power control equipment, incineration equipment, railway, aviation, vehicle equipment, safety devices, government agencies, and equipment manufactured in accordance with individual industry regulations.
♦Machinery, systems, and devices that may endanger life or property.
♦24-hour continuous operation systems such as gas, water supply, and electrical supply systems that require high reliability.