C-Lin
欣灵电气股份有限公司
XINLING ELECTRICAL CO.,LTD.
Address: No. 328, 19th Wei Road, Yueqing Economic Development Zone, Zhejiang Province, China
Tel: 0577-6273 5555 Fax: 0577-6272 2963
Official Website: www.c-lin.cn E-mail: C-Lin@xinling.com
Technical Consultation: 400-8236-775

RECYCLABLE

National High-Tech Enterprise Zhejiang Famous Trade Name

C-Lin 欣灵

使用说明书
Products Instructions

# CDAM4100 Series

## Remote I/O Module

Thank you very much for using C-Lin brand Remote I/O Modules. Please read the user manual before using the product.

27A001O0

产品合格证

符合标准:

检 验 员: 检 05

出厂日期: 见产品或包装

本产品经检验合格,准予出厂。

C-Lin 欣灵电气股份有限公司 XINLING ELECTRIC CO.,LTD



# Preface

The CDAM4100 series remote I/O modules adopt the standard Modbus RTU protocol, enabling connection with PLCs and touch screens. They provide remote input/output signals for control systems.

This manual explains the usage methods, operation procedures, precautions, and other key information of the CDAM4100 series remote I/O modules. Please read this manual thoroughly before using the product and keep it in a safe place for future reference.

For the safety of operators and mechanical equipment, installation, commissioning, and parameter adjustment must be carried out by professional personnel. Please pay close attention to sections marked with symbols such as **[WARNING]** and **[CAUTION]** in this manual. If you have any questions or concerns, please contact our technical service department.

## ■ Meaning of Symbols

To prevent harm to personnel and damage to equipment, and to eliminate potential hazards, this manual classifies the mandatory compliance items as follows:

| | |
|---|---|
| ⚠ WARNING | This symbol indicates that ignoring it and operating incorrectly will result in personal injury. |
| ⚠ CAUTION | This symbol indicates that ignoring it and operating incorrectly will result in property damage (e.g., product malfunction). |

NOTE This symbol indicates a warning against operations that are prone to error.

## ■ General Precautions

♦Before starting work and operation, confirm that the product's functions and performance are normal before putting it into use.
♦A safety circuit should be configured using a method that does not rely on the programmable controller (PLC). This ensures that even if the PLC fails, the entire system can be moved to a safe location starting from the fail-safe point.
♦Note: The functionality and performance of products used outside of standard specifications or modified cannot be guaranteed.
♦When using our products in combination with other products, their functionality and performance may not meet requirements depending on usage conditions and the environment. Please use them after thorough evaluation.
♦Do not use this product for purposes such as protecting human bodies.





## ■ CAUTION

When using the product under the following conditions and environments, safety measures such as redundant usage methods for rated values and functions, and fail-safe protection must be adopted. Please also contact our sales department.
♦Before starting work and operation, confirm that the product's functions and performance are normal before putting it into use.
♦When used for nuclear power plant control, railway facilities, aviation facilities, vehicles, combustion equipment, medical devices, amusement facilities, safety equipment, etc.
♦When it has a significant impact on personal life and property and requires special safety provisions.

# Contents

Chapter 1 Installation and Operation . . . . . 5
Chapter 2 Technical Specifications of Each I/O Module . . . . . 7
Chapter 3 Register Address Description . . . . . 13
Chapter 4 Communication Data Format . . . . . 18
Chapter 5 Dimensions Drawing . . . . . 27





# Chapter 1 Installation and Operation

## Mounting on DIN Rail

Mounting Procedure
Hook the CDAM4100 series remote I/O module onto the DIN rail and press down firmly until you hear a "click" sound, which confirms the module is securely locked in place.

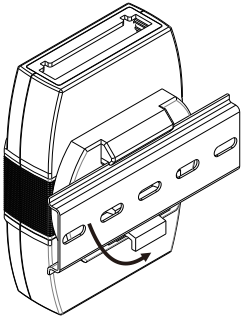

Removal Procedure
First, remove the screws on both sides of the module and lift it off the rail.Then, insert a screwdriver into the position shown in the diagram and pry outward in the indicated direction to release the module.

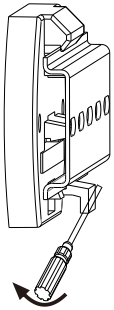

## Communication Status

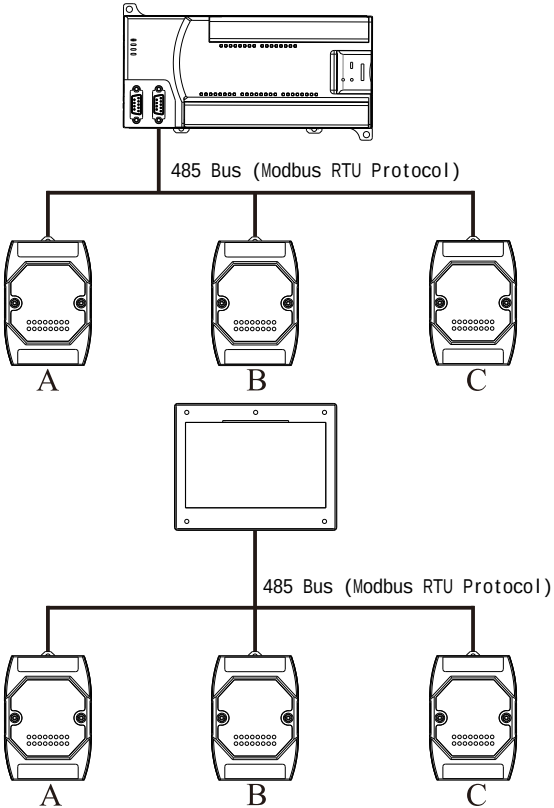






# Chapter 2 Technical Specifications of Each I/O Module

## Technical Specifications

### CDAM4101 Remote I/O Module

| | | |
|---|---|---|
| Operating Voltage | | DC21.6～26.4V |
| Power Consumption | | <3W |
| 485 | Interface Type | Plug-in Terminal Block |
| | Protocol Type | Modbus RTU(Addresses Base1) |
| | Transmission Distance | <1200m |
| | Communication Baud Rate | 1200bps-115200bps |
| Digital Channels | Contact Capacity | Transistor Output Type: 0.2A / 30VDC |
| | Number of Channels | 16 Output Channels |
| Dimensions | | 103×72×34. 5mm |
| Mounting Method | | Standard 35mm U-type DIN Rail Mounting |
| Operating Environment | | Ambient Temperature: -10~40℃, Humidity: ≤90% RH (Non-condensing) |

### CDAM4102 Remote I/O Module

| | | |
|---|---|---|
| Operating Voltage | | DC21.6～26.4V |
| Power Consumption | | <3W |
| 485 | Interface Type | Plug-in Terminal Block |
| | Protocol Type | Modbus RTU(Addresses Base1) |
| | Transmission Distance | <1200m |
| | Communication Baud Rate | 1200bps-115200bps |
| Digital Channels | Number of Channels | 16 Input Channels |
| Dimensions | | 103×72×34. 5mm |
| Mounting Method | | Standard 35mm U-type DIN Rail Mounting |
| Operating Environment | | Ambient Temperature: -10~40℃, Humidity: ≤90% RH (Non-condensing) |

CDAM4103 Remote I/O Module

| | | |
|---|---|---|
| Operating Voltage | | DC21.6～26.4V |
| Power Consumption | | <3W |
| 485 | Interface Type | Plug-in Terminal Block |
| | Protocol Type | Modbus RTU(Addresses Base1) |
| | Transmission Distance | <1200m |
| | Communication Baud Rate | 1200bps-115200bps |
| Digital Channels | Contact Capacity | Relay Output Type: 1A / 250VAC<br>Transistor Output Type: 0.2A / 30VDC |
| | Number of Channels | 8 Input Channels, 8 Output Channels |
| Dimensions | | 103×72×34. 5mm |
| Mounting Method | | Standard 35mm U-type DIN Rail Mounting |
| Operating Environment | | Ambient Temperature: -10~40℃, Humidity: ≤90% RH (Non-condensing) |





## Terminal Layout and Wiring for CDAM4100 Series

● CDAM4101 Terminal Layout

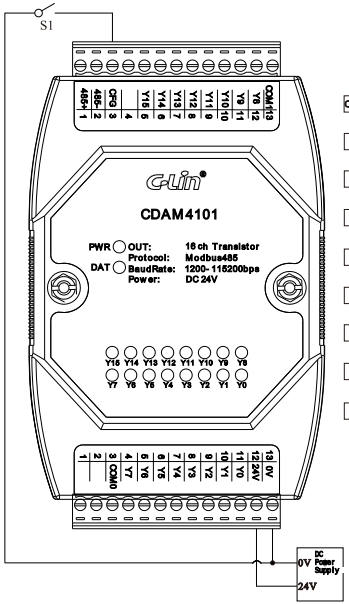


● CDAM4101 Output Wiring Diagram

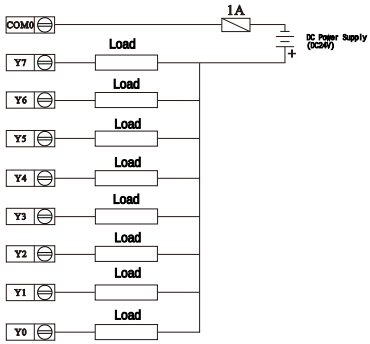


Transistor Output

Notes:1.Y0－Y15 are open-collector outputs with an integrated freewheeling diode.
2.Only DC loads are supported for this output type.
3.For the wiring configuration at the CFG position (as shown in the diagram), press and hold the S1 switch until the DAT indicator flashes, then release S1 to restore the module to its factory default settings.

● CDAM4102 Terminal Layout

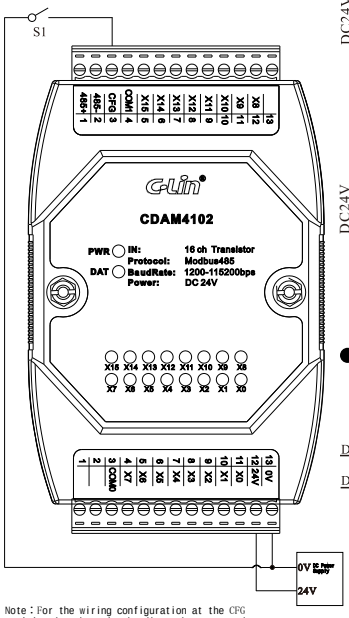


Note：For the wiring configuration at the CFG position (as shown in the diagram), press and hold the S1 switch until the DAT indicator flashes, then release the S1 switch to restore the module to its factory default settings.

● CDAM4102 Input Wiring Diagram

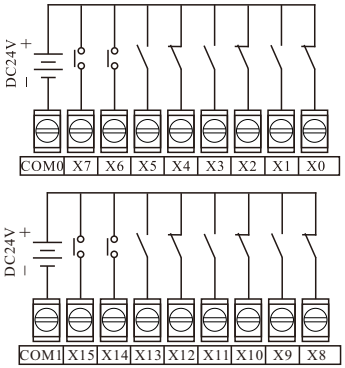


● NPN Sensor Input Wiring and PNP Sensor Input Wiring

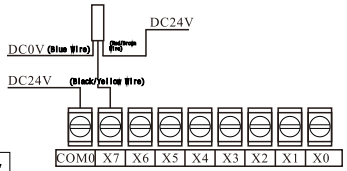


NPN Type

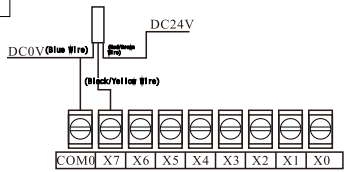


PNP Type





● CDAM4103 Terminal Layout

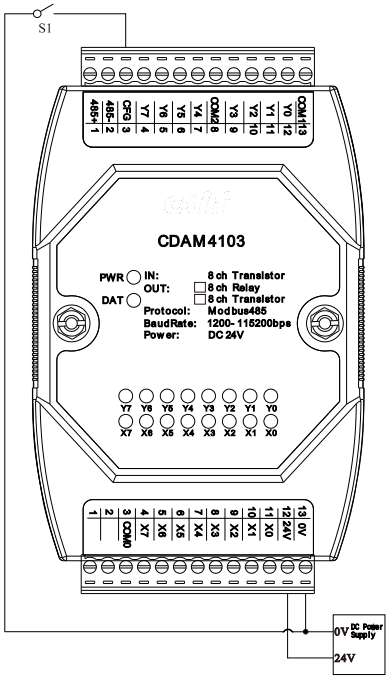


Notes：1.Transistors Y0－Y7 are open-collector outputs with an integrated freewheeling diode.
2.Only DC loads are supported for this output type.
3.For the wiring configuration at the CFG position (as shown in the diagram), press and hold the S1 switch until the DAT indicator flashes, then release S1 to restore the module to its factory default settings.

● Contact Signal Input Wiring Diagram

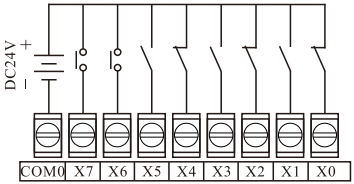


● NPN Sensor Input Wiring and PNP Sensor Input Wiring

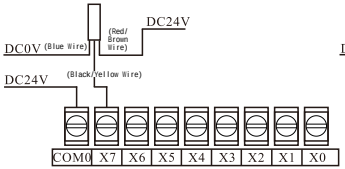


NPN Type

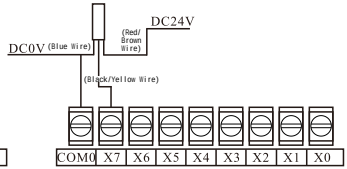


PNP Type

● Output Wiring Diagram

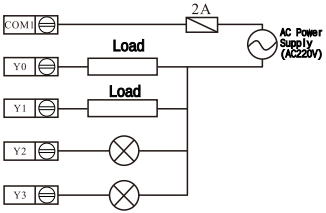


Relay Output

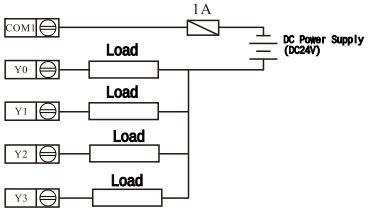


Transistor Output





# CDAM-4101 Register Address Description

| Coil Register Address (Decimal) | Function Description | Read/Write | Remarks |
|---|---|---|---|
| 17 | Output Channel Y0 | Read/Write | A non-zero register value indicates the output is active. Supports function codes 01, 05, 15 |
| 18 | Output Channel Y1 | Read/Write | |
| 19 | Output Channel Y2 | Read/Write | |
| 20 | Output Channel Y3 | Read/Write | |
| 21 | Output Channel Y4 | Read/Write | |
| 22 | Output Channel Y5 | Read/Write | |
| 23 | Output Channel Y6 | Read/Write | |
| 24 | Output Channel Y7 | Read/Write | |
| 25 | Output Channel Y8 | Read/Write | |
| 26 | Output Channel Y9 | Read/Write | |
| 27 | Output Channel Y10 | Read/Write | |
| 28 | Output Channel Y11 | Read/Write | |
| 29 | Output Channel Y12 | Read/Write | |
| 30 | Output Channel Y13 | Read/Write | |
| 31 | Output Channel Y14 | Read/Write | |
| 32 | Output Channel Y15 | Read/Write | |

# CDAM-4102 Register Address Description

| Discrete Input Register Address (Decimal) | Function Description | Read/ Write | Remarks |
|---|---|---|---|
| 01 | Input Channel X0 | Read Only | Input is active when the register value is non-zero. Supports function code 02. |
| 02 | Input Channel X1 | Read Only | |
| 03 | Input Channel X2 | Read Only | |
| 04 | Input Channel X3 | Read Only | |
| 05 | Input Channel X4 | Read Only | |
| 06 | Input Channel X5 | Read Only | |
| 07 | Input Channel X6 | Read Only | |
| 08 | Input Channel X7 | Read Only | |
| 09 | Input Channel X8 | Read Only | |
| 10 | Input Channel X9 | Read Only | |
| 11 | Input Channel X10 | Read Only | |
| 12 | Input Channel X11 | Read Only | |
| 13 | Input Channel X12 | Read Only | |
| 14 | Input Channel X13 | Read Only | |
| 15 | Input Channel X14 | Read Only | |
| 16 | Input Channel X15 | Read Only | |





# CDAM-4103 Register Address Description

| Discrete Input Register Address (Decimal) | Function Description | Read/Write | Remarks |
|---|---|---|---|
| 01 | Input Channel X0 | Read Only | A non-zero register value indicates a valid input. Supports function code 02 |
| 02 | Input Channel X1 | Read Only | |
| 03 | Input Channel X2 | Read Only | |
| 04 | Input Channel X3 | Read Only | |
| 05 | Input Channel X4 | Read Only | |
| 06 | Input Channel X5 | Read Only | |
| 07 | Input Channel X6 | Read Only | |
| 08 | Input Channel X7 | Read Only | |
| **Coil Register Address (Decimal)** | **Function Description** | **Read/Write** | **Remarks** |
| 17 | Output Channel Y0 | Read/Write | A non-zero register value indicates the output is active. Supports function codes 01, 05, 15 |
| 18 | Output Channel Y1 | Read/Write | |
| 19 | Output Channel Y2 | Read/Write | |
| 20 | Output Channel Y3 | Read/Write | |
| 21 | Output Channel Y4 | Read/Write | |
| 22 | Output Channel Y5 | Read/Write | |
| 23 | Output Channel Y6 | Read/Write | |
| 24 | Output Channel Y7 | Read/Write | |

# CDAM4100 Series Register Address Description

| Holding Register Address | Function Description | Read/Write | Remarks |
|---|---|---|---|
| 210 | Module Identification | Read/Write | Can be rewritten, but will restore to the corresponding module model after reset |
| 211 | Reserved | Read/Write | |
| 212 | Reserved | Read/Write | |
| 213 | Error Indication | Read/Write | |
| 214 | Restore Factory Settings | Read/Write | |
| 215 | Data Save | Read/Write | |
| 216 | Data Save Success Flag | Read/Write | |
| 217 | Filter Constant 0 | Read/Write | Filter Constants for Discrete Input Signals |
| 218 | Filter Constant 1 | Read/Write | |
| 219 | Filter Constant 2 | Read/Write | |
| 220 | Filter Constant 3 | Read/Write | |
| 221 | Filter Constant 4 | Read/Write | |
| 222 | Filter Constant 5 | Read/Write | |
| 223 | Filter Constant 6 | Read/Write | |





| Holding Register Address | Function Description | Read/Write | Remarks |
|---|---|---|---|
| 224 | Filter Constant 7 | Read/Write | Filter Constants for Discrete Input Signals |
| 225 | Filter Constant 8 | Read/Write | |
| 226 | Filter Constant 9 | Read/Write | |
| 227 | Filter Constant 10 | Read/Write | |
| 228 | Filter Constant 11 | Read/Write | |
| 229 | Filter Constant 12 | Read/Write | |
| 230 | Filter Constant 13 | Read/Write | |
| 231 | Filter Constant 14 | Read/Write | |
| 232 | Filter Constant 15 | Read/Write | |
| 233 | 485 Communication Baud Rate | Read/Write | Default Baud Rate: 9600 bps |
| 234 | 485 Parity Mode | Read/Write | Default Parity Mode: Even Parity |
| 235 | 485 Slave Address | Read/Write | Address Range: 1~247 (Default Address: 1) |
| 236 | Communication Configuration Password | Read/Write | Default Password: 1234 (Hexadecimal) |
| 237 | Factory Reset Password | Read/Write | Default Password: 1234 (Hexadecimal) |

# Example of Communication Data Format

Note: The module's default serial port parameters are 9600 bps / 8 data bits / Even parity / 1 stop bit.
Since the module's Modbus RTU protocol uses a 1-based starting address, you must subtract 1 from the register address during actual operations. For example, Output Channel Y0 at address 17 corresponds to the actual address 0x0010.

1. Read Output Coil Register Status

This is an example of reading the status of output coils (Y0~Y7) at register addresses 17~24.

| Host Transmission | (Hexadecimal) | Slave Response | (Hexadecimal) |
|---|---|---|---|
| Slave Address | 01 | Slave Address | 01 |
| Function Code | 01 | Function Code | 01 |
| Starting Address Hi | 00 | Byte Count | 01 |
| Starting Address Lo | 10 | Output Status 24~17 | 00 |
| Output Quantity Hi | 00 | Checksum Hi | 51 |
| Output Quantity Lo | 08 | Checksum Lo | 88 |
| Checksum Hi | 3C | | |
| Checksum Lo | 09 | | |

Notes：For the CDAM4101 (16-channel output) module, the output coil register addresses are 17~32.
For the CDAM4102 (16-channel input) module, output coil register addresses 17~32 are not applicable.
For the CDAM4103 (8-channel input, 8-channel output) module, output coil register addresses are 17~24; addresses 25~32 are not applicable.





2. Read Discrete Input Register Status

This is an example of reading the status of discrete inputs (X0~X7) at register addresses 1~8.

| Host Transmission | (Hexadecimal) | Slave Response | (Hexadecimal) |
|---|---|---|---|
| Slave Address | 01 | Slave Address | 01 |
| Function Code | 02 | Function Code | 02 |
| Starting Address Hi | 00 | Byte Count | 01 |
| Starting Address Lo | 00 | Output Status 8~1 | 00 |
| Output Quantity Hi | 00 | Checksum Hi | A1 |
| Output Quantity Lo | 08 | Checksum Lo | 88 |
| Checksum Hi | 79 | | |
| Checksum Lo | CC | | |

Notes：For the CDAM4101 (16-channel output) module, the output coil register addresses are 17~32.
For the CDAM4102 (16-channel input) module, output coil register addresses 17~32 are not applicable.
For the CDAM4103 (8-channel input, 8-channel output) module, output coil register addresses are 1~8; addresses 9~16 are not applicable.

3. Read Holding Register Status

This is an example of reading the status of holding registers at addresses 210~237.

| Host Transmission | (Hexadecimal) | Slave Response | (Hexadecimal) |
|---|---|---|---|
| Slave Address | 01 | Slave Address | 01 |
| Function Code | 03 | Function Code | 03 |
| Starting Address Hi | 00 | Byte Count | 38 |
| Starting Address Lo | D1 | Register Value Hi (210) | 41 |
| Register Quantity Hi | 00 | Register Value Lo (210) | 01 |
| Register Quantity Lo | 1C | .... | .... |
| Checksum Hi | 14 | Register Value Hi (233) | 00 |
| Checksum Lo | 3A | Register Value Lo (233) | 03 |
| | | Register Value Hi (234) | 00 |
| | | Register Value Lo (234) | 02 |
| | | Register Value Hi (235) | 00 |
| | | Register Value Lo (235) | 01 |
| | | Register Value Hi (236) | 00 |
| | | Register Value Lo (236) | 00 |
| | | Register Value Hi (237) | 00 |
| | | Register Value Lo (237) | 00 |
| | | Checksum Hi | 3E |
| | | Checksum Lo | 88 |





Note 1：For the CDAM4101 (16-channel output) module, the holding register address 210 corresponds to 4101 (Hex).
For the CDAM4102 (16-channel input) module, the holding register address 210 corresponds to 4102 (Hex).
For the CDAM4103 (8-channel input, 8-channel output) module, the holding register address 210 corresponds to 4103 (Hex).
This register value is used for device identification and must not be modified by the user.

Note 2：The Error Indication register (address 213) has a value of 0000 under normal conditions.
When data saving or factory reset fails due to a password error, the register value will be 0001 (Hex).

Note 3：To perform a factory reset:
First set the Factory Reset Password register (address 237) to 1234 (Hex).
Then set the Restore Factory Settings register (address 214) to 0001 (Hex).

// Set Factory Reset Password register to 1234 (Hex)
Transmit command: 01 06 00 EC 12 34 45 48
Receive response: 01 06 00 EC 12 34 45 48

// Enable Factory Reset
Transmit command: 01 06 00 D5 00 01 59 F2
Receive response: 01 06 00 D5 00 01 59 F2

Note 4: Filter Constant Registers 0~15 (addresses 217~232) correspond to the filtering settings for discrete inputs X0~X15, respectively. The setting value ranges from 0000 to FFFF (Hex). For example, setting Filter Constant Register 0 to 000A (Hex) means the discrete input X0 channel will filter out signals shorter than 10 ms.

// Set Filter Constant Register 0 to 000A (Hex). The filter takes effect immediately after setting.
Transmit command: 01 06 00 D8 00 0A 89 F6
Receive response: 01 06 00 D8 00 0A 89 F6

// Set Communication Configuration Password
Transmit command: 01 06 00 EB 12 34 F4 89
Receive response: 01 06 00 EB 12 34 F4 89

// Enable Data Save (Data will be retained after saving)
Transmit command: 01 06 00 D6 00 01 A9 F2
Receive response: 01 06 00 D6 00 01 A9 F2

For the CDAM4101 (16-channel output) module, Filter Constant Registers are not applicable.
For the CDAM4102 (16-channel input) module, Filter Constant Registers are at addresses 217~232.
For the CDAM4103 (8-channel input, 8-channel output) module, Filter Constant Registers are at addresses 217~224; addresses 225~232 are not applicable.

Note 5: Data Save：To save your configured parameters:First set the Communication Configuration Password register (address 236) to 1234 (Hex).Then set the Data Save register (address 215) to 0001 (Hex).If the data save is successful, the Data Save Success Flag register (address 216) will automatically be set to 0001 (Hex).If the data save fails, the Error Indication register (address 213) will be set to 0001 (Hex).

Note 6: Communication Parameter Modification:

| Address 233: 485 Communication Baud Rate Register (Hex) | Baud Rate (bps) |
|---|---|
| 0000 | 1200 |
| 0001 | 2400 |
| 0002 | 4800 |
| 0003 | 9600 |
| 0004 | 19200 |





| | |
|---|---|
| 0005 | 38400 |
| 0006 | 57600 |
| 0007 | 115200 |
| Other values | 9600 |

| Address 234: 485 Parity Mode Register (Hex) | Parity Mode |
|---|---|
| 0000 | No Parity |
| 0001 | Odd Parity |
| 0002 | Even Parity |
| Other values | Even Parity |

Example:
Change the slave address from 01 and serial port parameters from 9600 bps / 8 data bits / Even parity / 1 stop bit to slave address 05 and serial port parameters 115200 bps / 8 data bits / No parity / 2 stop bits.
(The Modbus RTU protocol specifies the length of the data frame, so 2 stop bits are required when no parity is used.)

// Modify Baud Rate, Parity Mode, Slave Address, and set Communication Configuration Password
Transmit command: 01 10 00 E8 00 04 08 00 07 00 00 00 05 12 34 BE ED
Receive response: 01 10 00 E8 00 04 41 FE

// Enable Data Save (Data will be retained after saving)
Transmit command: 01 06 00 D6 00 01 A9 F2
Receive response: 01 06 00 D6 00 01 A9 F2

After receiving this command, the module will communicate using the new serial port parameters: 115200 bps / 8 data bits / No parity / 2 stop bits, with slave address 05.

4. Write Output Coil Register

This is an example of writing to turn ON the Output Coil (Y0) register at address 17.

| Host Transmission | (Hexadecimal) | Slave Response | (Hexadecimal) |
|---|---|---|---|
| Slave Address | 01 | Slave Address | 01 |
| Function Code | 05 | Function Code | 05 |
| Starting Address Hi | 00 | Starting Address Hi | 00 |
| Starting Address Lo | 10 | Starting Address Lo | 10 |
| Output Value Hi | FF | Output Value Hi | FF |
| Output Value Lo | 00 | Output Value Lo | 00 |
| Checksum Hi | 8D | Checksum Hi | 8D |
| Checksum Lo | FF | Checksum Lo | FF |

This is an example of writing to turn OFF the Output Coil (Y0) register at address 17.

| Host Transmission | (Hexadecimal) | Slave Response | (Hexadecimal) |
|---|---|---|---|
| Slave Address | 01 | Slave Address | 01 |
| Function Code | 05 | Function Code | 05 |
| Starting Address Hi | 00 | Starting Address Hi | 00 |
| Starting Address Lo | 10 | Starting Address Lo | 10 |
| Output Value Hi | 00 | Output Value Hi | 00 |
| Output Value Lo | 00 | Output Value Lo | 00 |
| Checksum Hi | CC | Checksum Hi | CC |
| Checksum Lo | 0F | Checksum Lo | 0F |





5. Write Multiple Output Coil Registers

This is an example of writing to turn ON multiple Output Coils (Y0~Y7) registers at addresses 17~24.

| Host Transmission | (Hexadecimal) | Slave Response | (Hexadecimal) |
|---|---|---|---|
| Slave Address | 01 | Slave Address | 01 |
| Function Code | 0F | Function Code | 0F |
| Starting Address Hi | 00 | Starting Address Hi | 00 |
| Starting Address Lo | 10 | Starting Address Lo | 10 |
| Output Quantity Hi | 00 | Output Quantity Hi | 00 |
| Output Quantity Lo | 08 | Output Quantity Lo | 08 |
| Byte Count | 01 | Checksum Hi | 55 |
| Output Value | FF | Checksum Lo | C8 |
| Checksum Hi | 7F | | |
| Checksum Lo | 16 | | |
| | | | |

This is an example of writing to turn OFF multiple Output Coils (Y0~Y7) registers at addresses 17~24.

| Host Transmission | (Hexadecimal) | Slave Response | (Hexadecimal) |
|---|---|---|---|
| Slave Address | 01 | Slave Address | 01 |
| Function Code | 0F | Function Code | 0F |
| Starting Address Hi | 00 | Starting Address Hi | 00 |
| Starting Address Lo | 10 | Starting Address Lo | 10 |
| Output Quantity Hi | 00 | Output Quantity Hi | 00 |
| Output Quantity Lo | 08 | Output Quantity Lo | 08 |

| | | | |
|---|---|---|---|
| Byte Count | 01 | Checksum Hi | 55 |
| Output Value | 00 | Checksum Lo | C8 |
| Checksum Hi | 3F | | |
| Checksum Lo | 56 | | |
| | | | |





# Chapter 5 Outline Dimensions Drawing

## Outline Dimensions Drawing

CDAM4100 series remote I/O module unit
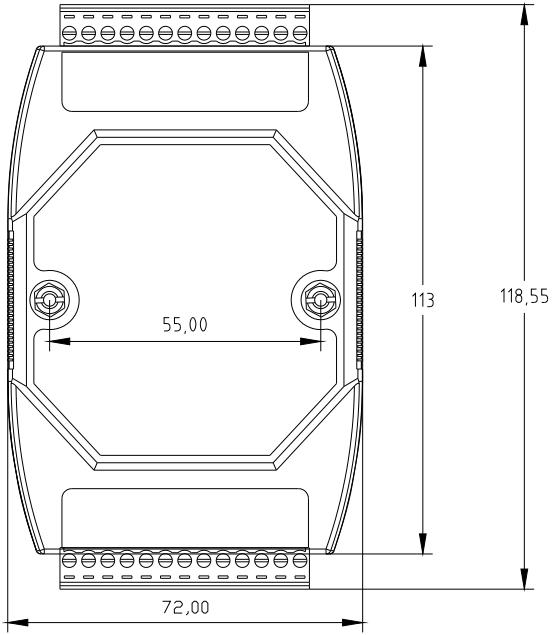
### CDAM4100 Series Remote I/O Module