浙 江 联 和 电 子 有 限 公 司

ZHEJIANG LIANHE ELECTRONICS CO.,LTD.

承　认　书

SPECIFCATION FOR APPROVAL

客 户 名 称 CUSTOMER	
品 名 DESCRIPTION	FPC2.54型连接器
料 号 CUSERTOMER PART NO	F2541
日 期 DATE	

客 户 确 认（APPROVED SIGNATURES）

核准（APPROVAL）	工程（ENGINEERING）	品管（QC）
承认结果：	☐ 承认　☐ 不承认	☐ 重新送样

浙江联和电子有限公司
ZHEJIANG LIANHE ELECTRONICS CO.,LTD.
地址：浙江省乐清市乐清湾港区创新路
Address：Chuangxin Road,YueQing Bay Port Zone,Yueqing City,Zhejiang China 325600.
Tel：0577-62383668(销售)　0577-62383212(Sales)
Fax：0577-62382566
Web：lhecn.1688.com(中文) www.lhecn.net.cn(English)

目　　录

1. 封面……1

2. 目录……2

3. 命名和图纸……3-6

4. 规格书……7-10

5. 样件检验/实验报告 ……11-13

6. 认证……14-18

7. PBT RoHS报告……19-33

8. PBT REACH/卤素报告 ……34-49

9. 端子RoHS报告……50-57

10. 端子REACH报告……58-65

11. MSDS ……66-78

12. 反馈与建议……79

核准（APPROVAL）	确认（CHECK）	制作（PREPARE）

FPC2.54料号命名规则

FPC2.54 Part No.Naming Rules

F X - X N

单排Single Row:08、10、12、14

WV=直针座 Straight Angle

WR=弯针座 Right Angle

系列号 Series Number

2541

F:FPC连接器 FPC Connectors

FPC2.54型连接器承认图面

REV	DESCRIPTION	DATE
A/0	原 始 版 本	E
A/1	修 订 版 本	

安装尺寸Mounting Measurement

立式 Straight Angle(V-Type)

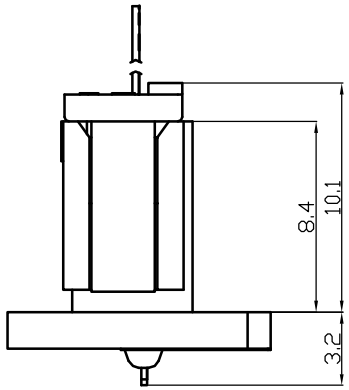

卧式 Right Angle(R-Type)

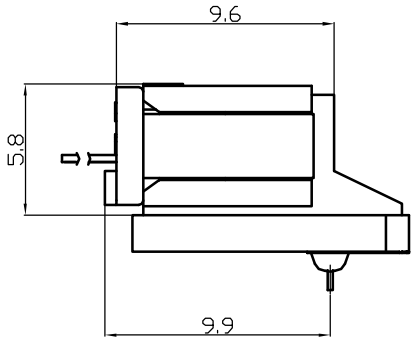

引脚部尺寸 Lead section dimensions of FPC

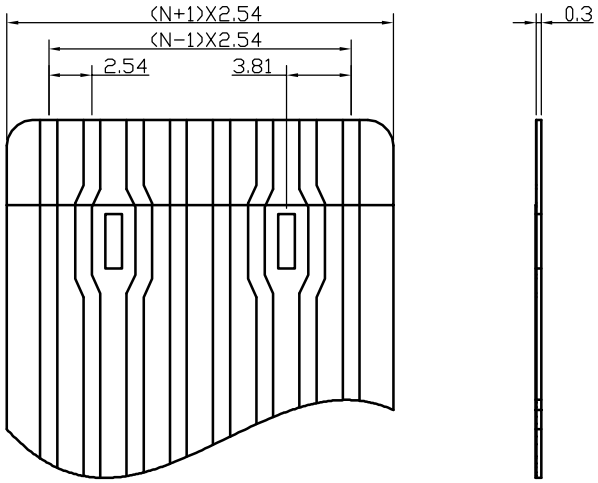

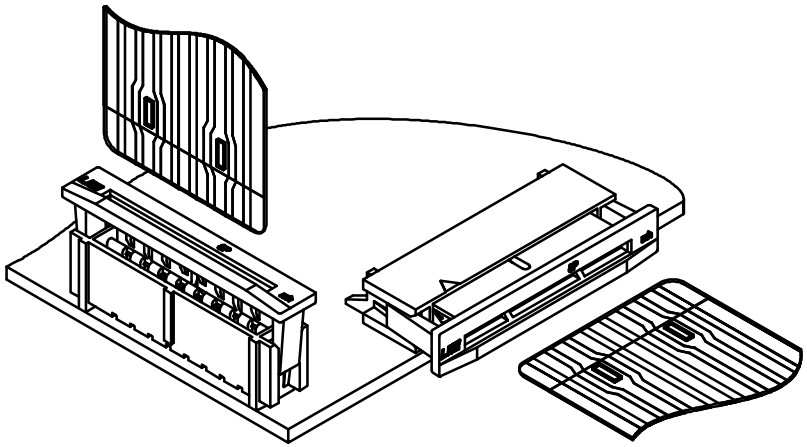

序号	图 号	名 称	材 料	数量	附 注

未 注 公 差

X.° ±3° X.X° ±0.5°

>0-3	>3-18	>18-50	>50-120
±0.12	±0.15	±0.3	±0.5

LHE® 浙江联和电子有限公司
ZHEJIANG LIANHE ELECTRONICS CO.,LTD

单位	比例	Design Units	SIZE	页码
MM Only	——	METRIC	A4	

制 作	审 核	批 准	材 料	图 号		Part No
			见图解	品 名	FPC2.54	

旧底图总号
底图总号
签 字
日 期

FPC2.54型连接器承认图面

REV	DESCRIPTION	DATE
A/0	原 始 版 本	E
A/1	修 订 版 本	

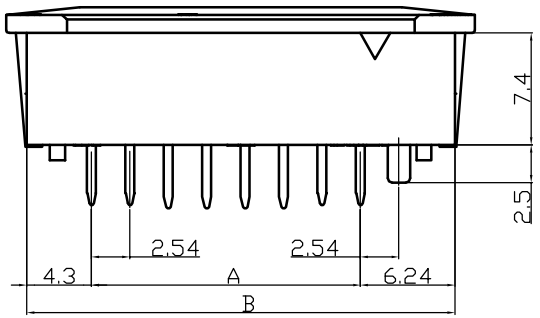

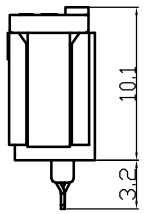

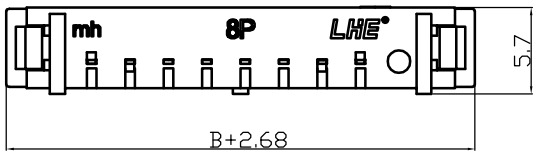

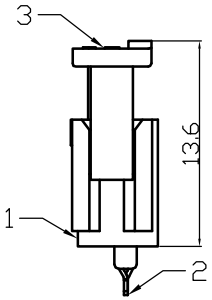

装配引脚前
Before assembly

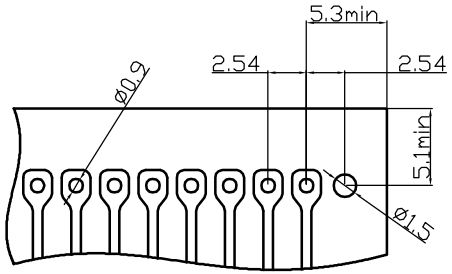

P.C.B LAYOUT

规格 Specifications

1、额定电流 Current rating：镀锡铜箔引脚/ 1.0A AC,DC
银浆炭黑外皮引脚/ 50mA AC,DC

2、额定电压 Voltage rating：250V AC,DC

3、温度范围(含通电温升) Temperature range：-40°C to +85°C
(Including temperature rise in applying electrical current)

4、接触电阻 Contact resistance：
<镀锡铜箔引脚> 初期/ ≤30mΩ 环境测试后/ ≤50mΩ
<银浆炭黑外皮引脚>初期/ ≤10Ω 环境测试后/ ≤15Ω

5、绝缘电阻 Insulation resistance：≥1000MΩ

6、耐电压 Withstanding voltage：1200V AC/minute

7、适用 Applicable FFC\FPC：导体间距/ 2.54mm
导体宽度/ 1.0mm
接触部厚度/ 0.3±0.03mm

8、适用基板厚度 Applicable PC board thickness：1.6mm

Poles	Part No.		Dimensions mm	
			A	B
8	F2541-DWV08	FPC2.54-8AD	17.78	28.32
10	F2541-DWV10	FPC2.54-10AD	22.86	33.40
12	F2541-DWV12	FPC2.54-12AD	27.94	38.48
14	F2541-DWV14	FPC2.54-14AD	33.02	43.56

序号	图号	名称	材料	数量	附注
3		Latch 锁扣	PBT	1	Green 绿色
2		Terminal 端子	Phos Bronze tin 磷青铜镀锡	N	
1		Housing 基座	PBT	1	Green 绿色

未注公差
X.° ±3° X.X° ±0.5°

LHE® 浙江联和电子有限公司
ZHEJIANG LIANHE ELECTRONICS CO.,LTD

>0-3	>3-18	>18-50	>50-120	单位	比例	Design Units	SIZE	页码
±0.12	±0.15	±0.3	±0.5	MM Only	——	METRIC	A4	

制作	审核	批准	材料	图号		Part No
			见图解	品名	FPC2.54-NAD	

旧底图总号
底图总号
签字
日期

FPC2.54型连接器承认图面

REV	DESCRIPTION	DATE
A/0	原 始 版 本	E
A/1	修 订 版 本	

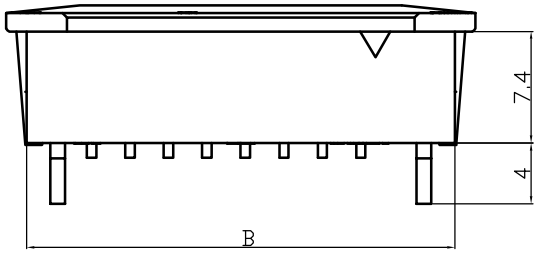

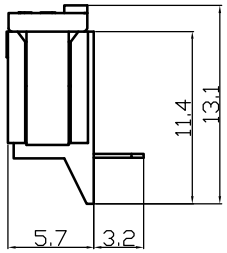

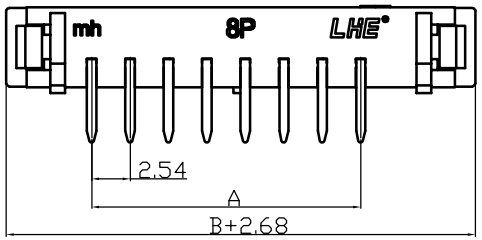

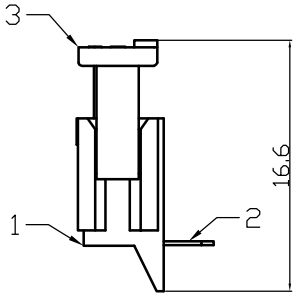

装配引脚前
Before assembly

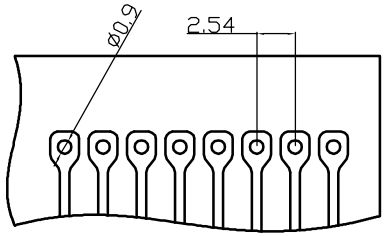

P.C.B LAYOUT

规格 Specifications

1、额定电流 Current rating：镀锡铜箔引脚/ 1.0A AC,DC
银浆炭黑外皮引脚/ 50mA AC,DC

2、额定电压 Voltage rating：250V AC,DC

3、温度范围(含通电温升) Temperature range：-40°C to +85°C
(Including temperature rise in applying electrical current)

4、接触电阻 Contact resistance：
<镀锡铜箔引脚> 初期/ ≤30mΩ 环境测试后/ ≤50mΩ
<银浆炭黑外皮引脚>初期/ ≤10Ω 环境测试后/ ≤15Ω

5、绝缘电阻 Insulation resistance：≥1000MΩ

6、耐电压 Withstanding voltage：1200V AC/minute

7、适用 Applicable FFC\FPC：导体间距/ 2.54mm
导体宽度/ 1.0mm
接触部厚度/ 0.3±0.03mm

8、适用基板厚度 Applicable PC board thickness：1.6mm

Poles	Part No.		Dimensions mm	
			A	B
8	F2541-WR08	FPC2.54-8AWD	17.78	28.32
10	F2541-WR10	FPC2.54-10AWD	22.86	33.40
12	F2541-WR12	FPC2.54-12AWD	27.94	38.48
14	F2541-WR14	FPC2.54-14AWD	33.02	43.56

序号	图号	名称	材料	数量	附注
3		Latch 锁扣	PBT	1	Green 绿色
2		Terminal 端子	Phos Bronze tin 磷青铜镀锡	N	
1		Housing 基座	PBT	1	Green 绿色

未注公差
X.° ±3° X.X° ±0.5°

>0-3	>3-18	>18-50	>50-120
±0.12	±0.15	±0.3	±0.5

LHE® 浙江联和电子有限公司
ZHEJIANG LIANHE ELECTRONICS CO.,LTD

单位	比例	Design Units	SIZE	页码
MM Only	——	METRIC	A4	

制作	审核	批准	材料	图号		Part No
			见图解	品名	FPC2.54-NAWD	

旧底图总号
底图总号
签字
日期

产品规格书

PRODUCT SPECIFICAION

版本号
Version Number: A

产品编码
Part Number: F2541

■ 规格 Specifications

◆ 1、额定电流 Current rating：镀锡铜箔引脚/ 1.0A AC,DC
银浆炭黑外皮引脚/ 50mA AC,DC

◆ 2、额定电压 Voltage rating：250V AC,DC

◆ 3、温度范围(含通电温升) Temperature range：-40℃ to +85℃
(Including temperature rise in applying electrical current)

◆ 4、接触电阻 Contact resistance：
<镀锡铜箔引脚> 初期/ ≤30mΩ 环境测试后/ ≤50mΩ
<银浆炭黑外皮引脚>初期/ ≤10Ω 环境测试后/ ≤15Ω

◆ 5、绝缘电阻 Insulation resistance：≥1000MΩ

◆ 6、耐电压 Withstanding voltage：1200V AC/minute

◆ 7、适用 Applicable FFC\FPC：导体间距/ 2.54mm
导体宽度/ 1.0mm
接触部厚度/ 0.3±0.03mm

◆ 8、适用基板厚度 Applicable PC board thickness：1.6mm

产品性能测试 Performance test			
	项目 Item	测试条件 Test Condition	规格要求 Requirement
1	外观 Appearance	目测 Visual by eye 视力 Light: ＞1.0 照明 Lamp: 200～300Lx 目测距离 Space: 0.3～0.5m	1.塑料件表面应无明显疤痕、凹陷、开裂及影响使用的变形。 Plastic part:smooth and flat surface without discolor,broken,crack distortion defects is acceptable. 2.金属件表面无锈蚀、氧化、无明显的机械损伤等缺陷。 Metal part:btight and even surface without rust,oxide,fog and obvious physical damage defects is acceptable. 3.导线表面清洁、无破损等缺陷，印字及标志清晰。 Wire:clearing surface without discolor,broken defects,indistinct words and mark is acceptable.
2	接触电阻 Contact Resistance	插合连接器,用小功率电路进行测试。 Mate connectors,measure by dry circuit.	<镀锡铜箔引脚> 初期/ ≤30mΩ <银浆炭黑外皮引脚>初期/ ≤10Ω
3	绝缘电阻 Insulation Resistance	在相邻接触件之间或地线之间，用500V DC电压进行测试。 Apply 500V DC between adjacent terminal or ground.	1000mΩ MIN
4	耐电压 Dielectric Strength	相邻接触件之间或地线之间施加50Hz 1000V AC(有效值),漏电流1mA的电压作用，时间1min。 Mate connectors, apply 1000V AC for 1 minute between adjacent terminal or ground.	无击穿和飞弧现象 No Breakdown

产品规格书

PRODUCT SPECIFICAION

版本号
Version Number: A

产品编码
Part Number: F2541

产品性能测试 Performance test				
	项目 Item	测试条件 Test Condition	规格要求 Requirement	
5	压着部位抗张强度 Crimping Pull Out Force	在试验装置夹头中固定测试样品，在连接的轴线方向施加张力;速度不大于25mm/min。 Fix the crimped terminal,apply axial pull out force on the wire at the speed rate of not more 25mm/min.	--	--
6	壳体/端子固定力 Terminal/Housing Retention Force	固定连接器或测力计，在连接器轴线方向施加规定的拉力;速度不大于25mm/min。 Apply axial pull out force at the speed rate of not more 25mm/min on the pin assembled in the housing.	5N MIN	
7	针的固定力 Pin Retention Force	固定连接器或测力计，在连接器轴线方向对针施加规定的推力;速度不大于25mm/min。 Apply axial push out force at the speed rate of not more 25mm/minute on the terminal assembled in the base.	--	
8	可焊性 Solderability	把测试样品需要焊接的部位浸入焊锡炉中(锡炉温度245℃±5℃)2±0.5秒钟。 Soldering time: 2±0.5 second Solder Temperature:245℃±5℃	上锡率≥90% 90% of immersed area must show no voids,pin holes	
9	耐焊接热 Resistance to Soldering Heat	把测试样品需要焊接的部位浸入焊锡炉中(锡炉温度260℃)；2±0.5秒钟后在正常的条件下恢复1小时。 Soldering time: 2±0.5 second Solder Temperature:260℃	外观 Appearance	无损伤 No Damage
10	耐高温 Heat Resistance	连接器配合后，于85℃±2℃的空气中放置96小时，然后再回到室温中放置1～2h小时测定 Mated connectors are exposed to a temperature of 85℃±2℃ for 96 hours.	外观 Appearance 接触电阻 LLCR	无损伤 No Damage 50mΩ Max
11	耐低温 Clod Resistance	连接器配合后，于-40℃±2℃的空气中放置96小时，然后再回到室温中放置1～2h小时测定 Mated connectors are exposed to a temperature of -40℃±2℃for 96 hours.	外观 Appearance 接触电阻 LLCR	无损伤 No Damage 50mΩ Max
12	温度上升 Temperature Rise	插合连接器,通以最大允许电流。 Carring rated current load.	温度最大上升 Temperature Rise	30℃ MAX

产品规格书

PRODUCT SPECIFICAION

版本号
Version Number: A

产品编码
Part Number: F2541

产品性能测试 Performance test				
	项目 Item	测试条件 Test Condition	规格要求 Requirement	
13	恒定湿热 Humidity	温度：40±2℃ 相对湿度：90%～95% 搁置时间：96小时，取出恢复2h后检查 Temperature：40±2℃ Relative Humidity：90%～95% Duration：96 hours	外观 Appearance	无损伤 No Damage
			耐电压 Dielectric Strength	1000V,AC /minute
			绝缘电阻 Insulation Resistance	1000MΩ MIN
			接触电阻 LLCR	50mΩ MAX
14	温度循环 Temperature cycle	把测试样品放入高低温试验箱中,按下列步骤调试温度: a)在-40℃±2℃的恒温条件下放置0.5小时; b)在85℃±2℃的恒温条件下放置0.5小时; 从a)到b)为一个循环周期,共进行5个循环。恢复1h后检查。状态转换时间不多于1小时。 Mated connectors are exposed to 5 cycles of: a)-40℃±2℃ 0.5hour b)+85℃±2℃ 0.5hour	外观 Appearance	无损伤 No Damage
			耐电压 Dielectric Strength	1000V,AC /minute
			绝缘电阻 Insulation Resistance	1000MΩ MIN
			接触电阻 LLCR	50mΩ MAX
15	机械振动 Vibration	插合连接器，串联在一直流电源上，电流100mA;并模拟正常工作状态,振频为10～55Hz、振幅1.5mm；55～500Hz、加速度50m/s^2,每一轴线扫频循环次数10次、2小时。 Frequency：10～55Hz Amplitude：±1.5mm Frequency：＞55～500Hz Acceleration：50m/s^2 Duration：2 hours in each X,Y,Z axes	外观 Appearance	无损伤 No Damage
			接触电阻 Contact Resistance	50mΩ MAX
			中断 Intermittence	1μsec MAX
16	机械寿命 Repeated insertion/ withdrawal	以每分钟插拔10次的速率，插拔50次。 When mated up to 50 cycles repeatedly by the rate of 10 cycles per minute.	外观 Appearance	无损伤 No Damage
			耐电压 Dielectric Strength	1000V,AC /minute
			绝缘电阻 Insulation	1000MΩ MIN
			接触电阻 Contact Resistance	50mΩ MAX

产品规格书

PRODUCT SPECIFICAION

版本号
Version Number: A

产品编码
Part Number: F2541

产品性能测试 Performance test					
	项目 Item	测试条件 Test Condition	规格要求 Requirement		
17	盐雾 Salt Spray	把先冲后镀* 的测试样品从试验箱顶悬挂下来，采用浓度为5%±1(质量百分比)的氯化钠溶液，连续雾化16小时，试验后用流动的蒸馏水轻轻洗去表面沉积物。在常温常驻湿条件下恢复1～2小时。 16 hour exposure to a saltspray from the 5%±1 solution.	外观无损伤(五金件应无露出底金属的严重锈蚀；使用预镀的型材，其落料面允许有不影响其性能的轻微腐蚀。) Appearance:No Damage(No erosion with material exposed.And with plating material,slight erosion on the cutting surface acceptable)		
18	插入力与拔出力 Insertion and Withdrawal Force	相配的跳线以1mm/s～5mm/s的速度沿接插器轴线方向插入和拔出。 Insertion and withdraw cable at the speed rate of 1mm/s～5mm/s.		插入力（最大值） Insertion (Max)	拔出力（最小值） Withdrawal (Min)
			8P	--	--
			10P	--	--
			12P	--	--
			14P	--	--

制订 Edit: _____ 日期 Date: _____

审核 Check: _____ 日期 Date: _____

批准 Approval: _____ 日期 Date: _____

信 赖 性 试 验 成 绩 书

品名 (DESCRIPTION)	2.54mm FPC Connector	测定者 (Inspector)	吴曾原	测定条件 (Test Condition)	温度: 22℃ (Temperature)
番号 (MODEL NO.)	F2541	日期 (Date)	2017. 08. 19		湿度: 65% (Humidity)

试验项目 (Test Title)	规格 (Specification)		测定值(Data)					COM
			X1	X2	X3	X4	X5	
接触电阻 (C.R.)	30mΩ (Max)		14. 6	15. 3	17. 5	16. 5	15. 9	ok
绝缘电阻 (I.C.)	1000MΩ (Min)		∞	∞	∞	∞	∞	ok
耐电压(Dielectric Withstanding Voltage)	使用中不可有异常现象 (No physical damage shall be observed)		良好 (Good)	良好 (Good)	良好 (Good)	良好 (Good)	良好 (Good)	ok
脱出力 (PIN Retention)	0.50kg f (Min)		1. 16	1. 42	1. 84	1. 58	1. 6	ok
可焊性 (Altitude low temperature)	接触电阻 (C.R.)	50mΩ (Max)	18. 6	18. 9	17. 8	18. 5	19. 5	ok
	绝缘电阻 (I.C.)	1000MΩ (Min)	∞	∞	∞	∞	∞	ok
耐热性 (Resistance to high temperature)	接触电阻 (C.R.)	50mΩ (Max)	17. 8	18. 5	19. 6	18. 6	17. 5	ok
	绝缘电阻 (I.C.)	1000MΩ (Min)	∞	∞	∞	∞	∞	ok
耐湿性 (Humidity)	接触电阻 (C.R.)	50mΩ (Max)	20. 5	19. 8	20. 5	21. 5	20. 9	ok
	绝缘电阻 (I.C.)	1000MΩ (Min)	∞	∞	∞	∞	∞	ok
盐雾试验 (Salt spray)	不能有腐蚀现象 (No evident corrosion)		良好 (Good)	良好 (Good)	良好 (Good)	良好 (Good)	良好 (Good)	ok
	接触电阻 (C.R.)	500mΩ (Max)	19. 8	20. 5	21. 5	22. 6	21. 5	ok
热冲击试验 (Thermal shock)	接触电阻 (C.R.)	50mΩ (Max)	19. 5	20. 6	19. 7	18. 5	19. 5	ok
	绝缘电阻 (I.C.)	1000MΩ (Min)	∞	∞	∞	∞	∞	ok

浙江联和电子有限公司

全尺寸检测报告

表单编号：

客户	-	产品数量	-	产品料号	F2541-DWV08
检验日期	2017.08.21	检验数量	5	产品名称	FPC2.54-8AD
材料	PBT UL94V-0				
外观	无明显飞边毛刺，无缺料，无明显熔接痕				

序号	尺寸	公差		检验结果					判定	备注
		上	下	1	2	3	4	5		
1	4.3	4.45	4.15	4.33	4.28	4.28	4.35	4.32	OK	
2	2.54	2.66	2.42	2.56	2.55	2.51	2.52	2.51	OK	
3	6.24	6.39	6.09	6.26	6.27	6.23	6.21	6.23	OK	
4	2.5	2.62	2.38	2.52	2.51	2.49	2.51	2.48	OK	
5	7.4	7.55	7.25	7.43	7.44	7.41	7.39	7.38	OK	
6	5.7	5.85	5.55	5.72	5.71	5.69	5.68	5.72	OK	
7	3.2	3.35	3.05	3.22	3.18	3.2	3.19	3.21	OK	
8	10.1	10.3	9.95	10.13	10.11	10.08	10.07	10.09	OK	
9	13.6	13.8	13.5	13.66	13.65	13.56	13.58	13.63	OK	
10	17.78	17.9	17.6	17.85	17.83	17.73	17.75	17.8	OK	
11	28.32	28.6	28	28.35	28.37	28.3	28.28	28.31	OK	
12	31	31.3	30.7	31.05	31.08	31.06	31.05	31.07	OK	
13										
14										
15										
16										
17										
18										
19										
20										

核准：　　审核：CZH　　检验：WZY

浙江联和电子有限公司 品质章

浙江联和电子有限公司

全尺寸检测报告

表单编号：

客户	-	产品数量	-	产品料号	F2541-WR08
检验日期	2017.08.21	检验数量	5	产品名称	FPC2.54-8AWD
材料	PBT UL94V-0				
外观	无明显飞边毛刺，无缺料，无明显熔接痕				

序号	尺寸	公差		检验结果					判定	备注
		上	下	1	2	3	4	5		
1	4	4.15	3.85	4.02	4.01	3.98	3.99	3.98	OK	
2	2.54	2.66	2.42	2.53	2.55	2.51	2.52	2.56	OK	
3	7.4	7.55	7.25	7.42	7.44	7.38	7.39	7.38	OK	
4	5.7	5.85	5.55	5.73	5.71	5.69	5.68	5.69	OK	
5	3.2	3.35	3.05	3.21	3.18	3.22	3.19	3.21	OK	
6	11.4	11.6	11.3	11.44	11.38	11.42	11.43	11.39	OK	
7	13.1	13.3	13	13.12	13.16	13.06	13.15	13.09	OK	
8	16.6	16.8	16.5	16.66	16.63	16.58	16.57	16.64	OK	
9	17.78	17.9	17.6	17.84	17.83	17.74	17.75	17.8	OK	
10	28.32	28.6	28	28.36	28.37	28.29	28.28	28.31	OK	
11	31	31.3	30.7	31.07	31.06	31.08	31.05	31.07	OK	
12										
13										
14										
15										
16										
17										
18										
19										
20										

核准：　　审核：CZH　　检验：WZY

浙江联和电子有限公司 品质章

ONLINE CERTIFICATIONS DIRECTORY

ECBT2.E364711
Connectors for Use in Data, Signal, Control and Power Applications - Component

If you notice a change to your ECBT2 Listing Card, click here to learn more.

Page Bottom

Connectors for Use in Data, Signal, Control and Power Applications - Component

See General Information for Connectors for Use in Data, Signal, Control and Power Applications - Component

ZHEJIANG LIANHE ELECTRONIC CO LTD E364711
Chuangxin Road, YueQing Bay Port Zone
Yueqing, Zhejiang 325600 CHINA

Connector, Model(s) 5557 followed by 2, followed by 1 thru 12, followed by A(T); followed by 2 thru 6, followed by A(T); followed by 2, followed by 1 thru 12, followed by A2 or AW; followed by 2 thru 6, followed by A2 or AW; followed by 2, followed by 1 thru 12, followed by Y(T); followed by 2 thru 6, followed by Y(T)

Connector, Model(s) B2502 followed by 2 thru 16, followed by Y(T)

Connector, Model(s) BH3.5-2A(T), BH3.5-2Y(T)

Connector, Model(s) MX3.0 followed by 2, followed by 1 thru 12, followed by A(T); followed by 2 thru 12, followed by A(T); followed by 2, followed by 1 thru 12, followed by A2 or AW; followed by 2 thru 12, followed by A2 or AW; followed by 2, followed by 1 thru 12, followed by Y(T); followed by 2 thru 12, followed by Y(T)

Connector, Model(s) PHB followed by 2 thru 16, followed by Y(T); followed by 2 thru 16, followed by AWD, A, AW

Connector, Model(s) Series 1.25, 1254, 1255, followed by -2 thru -25, followed by Y(T), A or AW

Connector, Model(s) Series 5264, followed by -2 thru -16, followed by Y(T), A or AWD

Connector, Model(s) Series PH, PHB, XHB, JC25, SCN, followed by -2 thru -20, followed by Y(T), A, AW or AWD

Connector, Model(s) Series SM, followed by -2 thru -18, followed by Y(T) or A(T)

Connector, Model(s) Series VH, 3.96, followed by -2 thru -16, followed by Y(T), A, AW or AWG

Connector, Model(s) Series XH, followed by -2 thru -20, followed by Y(T), A, AW, AWGD, AWD or AWGDJ

Connector, Model(s) ZH followed by 2 thru 16, followed by Y(T); followed by 2 thru 16, followed by AWD or A

Marking: Company name or trademark LHE, model designation and the Recognized Component Mark, on the device or carton.

Last Updated on 2017-09-05

Questions? Print this page Terms of Use Page Top

© 2017 UL LLC

The appearance of a company's name or product in this database does not in itself assure that products so identified have been manufactured under UL's Follow-Up Service. Only those products bearing the UL Mark should be considered to be Certified and covered under UL's Follow-Up Service. Always look for the Mark on the product.

UL permits the reproduction of the material contained in the Online Certification Directory subject to the following conditions: 1. The Guide Information, Assemblies, Constructions, Designs, Systems, and/or Certifications (files) must be presented in their entirety and in a non-misleading manner, without any manipulation of the data (or drawings). 2. The statement "Reprinted from the Online Certifications Directory with permission from UL" must appear adjacent to the extracted material. In addition, the reprinted material must include a copyright notice in the following format: "© 2017 UL LLC".

产品认证证书

证书编号：CQC17134174484

申请人名称及地址

浙江联和电子有限公司
乐清市石帆镇后屿村

制造商名称及地址

浙江联和电子有限公司
乐清市石帆镇后屿村

生产企业名称及地址

浙江联和电子有限公司(V028069)
乐清市石帆镇后屿村

产品名称和系列、规格、型号

连接器聚酰胺 66(PA66)

型号见附件，材料名称：聚酰胺（PA66），材料牌号：A63RV0，全色， 球压:200℃，灼热丝可燃性指数(GWFI):960/0.3，灼热丝起燃温度(GWIT):960/0.3，燃烧等级:V-0/0.3mm,CTI600，红外光谱,差示扫描量热和热重分析见报告V-00601-2017134003019.

产品标准和技术要求

GB/T5169.21-2006,GB/T 5169.12-2013,GB/T 5169.13-2013,GB/T 5169.16-2008, GB/T 4207-2012, GB/T 6040-2002,GB/T 19466.1-2004,GB/T 19466.2-2004,GB/T 19466.3-2004,ISO 11358-1:2014

认证模式

产品检测+获证后监督

上述产品符合 CQC13-036047-2009 认证规则的要求，特发此证。

发证日期：2017 年 07 月 27 日

本证书的有效性依据发证机构的定期监督获得保持。

主任：

中国质量认证中心 CHINA QUALITY CERTIFICATION CENTRE

中国质量认证中心

中国．北京．南四环西路 188 号 9区 100070
http://www.cqc.com.cn

C 0101758

质量管理体系认证证书

证书编号：00114Q212141R1S/3302

兹证明

浙江联和电子有限公司

组织机构代码：55400335-0

中国浙江省温州市乐清市石帆镇后屿村

建立的质量管理体系符合标准：

ISO9001:2008　GB/T19001-2008

通过认证范围如下：

连接器的生产和服务

首次发证日期：2012年2月13日　本次发证日期：2014年12月15日　有效期至：2017年12月14日

在一个监督周期后，本证书必须与CQC签发的监督审核合格通知书合并使用方可有效。查询证书有效状态请登陆www.cqc.com.cn。
本证书信息可在国家认证认可监督管理委员会官方网站（www.cnca.gov.cn）上查询

体系认证
CNAS C001-Q

Signed by: Wang Kejiao

中国质量认证中心

中国·北京·南四环西路188号9区　100070

http://www.cqc.com.cn

Q 0188411

2009年版

Verification No.: CLZJ1411264692

VERIFICATION OF LVD COMPLIANCE

Applicant:	Zhejiang Lianhe Electrical Co., Ltd. Houyu village, Shifan town, Yueqing city, Zhejiang province, China.
Manufacturer:	Same as applicant
Product Description:	Connector Terminal
Model No:	A1001, A1002, A1003, A1251, A1252, A1253, A1254, A1255, A1256, A1257, A1501, A1502, A1503, A2001, A2002, A2003, A2004, A2005, A2006, A2007, A2501, A2502, A2503, A2504, A2505, A2505, A2506, A2507, A2541, A2542, A2543, A2544, A2545, A3961, A3962, A3963, A3564, A5081, A5082, B1501, B1502, B2001, B2002, B2501, B2502, C01581, C01582, C1251, C2001, C2002, C2501, C2502, C2505, C2506, C3001, C3002, C3003, C3004, C3005, C3006, C3501, C3502, C3701, C3702, C4001, C4002, C4141, C4142, C4201, C4202, C4203, C4204, C4601, C4602, C4501, C4502, C4503, C4504, C5001, C5002, C5031, C5032, C6201, C6202, C6351, C6352, C6701, C6702, D2801, D2802, D2803, D4801, D4802, D4803, D4804, D6301, D6302, D6303

Sufficient samples of the product have been tested and found to be in conformity with

Test Standard:	EN 60320-1:2001/A1:2007 EN 60529:1991/A1:2000
As shown in the Test Report Number(s):	TLZJ1411264692
Date of issue:	November 27, 2014

Conclusion

This Verification of LVD Compliance has been granted to the applicant based on the results of tests, performed by laboratory of Global Testing Services Co., Ltd on sample of the above-mentioned product in accordance with the provisions of the relevant specific standards and the Low Voltage Directive 2014/35/EU. The CE marking as shown below can be affixed, under the responsibility of the manufacturer, after completion of an EC Declaration of Conformity and compliance with all relevant EC Directives. The affixing of the CE marking presumes in addition that conditions the conditions in annexes IIIand Ⅳ of the Directive are fulfilled.

Approved by: Hermann Weiher

For and on behalf of
Global Testing Services Co., Ltd

Global Testing Services Co., Ltd
E-mail:info@gts-lab.com http://www.gts-lab.com
Room 1501-1502, No. 520 Yishan Rd., Xuhui District, Shanghai, 200235 China

Copyright of this certificate is owned by Global Testing Services Co., Ltd and may not be reproduced other than in full and with the prior approval of the General Manager.

THE INTERNATIONAL CERTIFICATION NETWORK

CERTIFICATE

IQNet and
CQC
hereby certify that the organization

Zhejiang LianHe Electronics Co., Ltd.

Houyu Village, Shifan Town, Yueqing City, Wenzhou City, Zhejiang Province, China

For the following field of activities

The Production and Service of Electronics Connector

Has implemented and maintains a
Management System
Which fulfils the requirements of the following standard

ISO9001:2008

Issued on: Dec. 15, 2014
Validity date: Dec. 14, 2017
Registration Number: 00114Q212141R1S/3302

Michael Drechsel
President of IQNet

Wang Kejiao
President of CQC

IQNet Partners*:
AENOR *Spain* AFNOR Certification *France* AIB-Vinçotte International *Belgium* ANCE-SIGE *Mexico* APCER *Portugal* CCC *Cyprus*
CISQ *Italy* CQC *China* CQM *China* CQS *Czech Republic* Cro Cert *Croatia* DQS Holding GmbH *Germany*
FCAV *Brazil* FONDONORMA *Venezuela* ICONTEC *Colombia* IMNC *Mexico* Inspecta Certification *Finland* IRAM *Argentina*
JQA *Japan* KFQ *Korea* MIRTEC *Greece* MSZT *Hungary* Nemko AS *Norway* NSAI *Ireland* PCBC *Poland*
Quality Austria *Austria* RR *Russia* SII *Israel* SIQ *Slovenia* SIRIM QAS International *Malaysia*
SQS *Switzerland* SRAC *Romania* TEST St Petersburg *Russia* TSE *Turkey* YUQS *Serbia*
IQNet is represented in the USA by: AFNOR Certification, CISQ, DQS Holding GmbH and NSAI Inc.
* The list of IQNet partners is valid at the time of issue of this certificate. Updated information is available under www.iqnet-certification.com

測試報告
Test Report

號碼(No.)：CE/2016/C4308　　日期(Date)：2016/12/27　　頁數(Page): 1 of 15

CHANG CHUN PLASTICS CO., LTD.
(CHANG CHUN CHEMICAL (ZHANGZHOU) CO., LTD.)
(CHANG CHUN CHEMICAL (JIANGSU) CO., LTD.)
7TH FL., NO. 301, SONG KIANG ROAD, TAIPEI, TAIWAN

以下測試樣品係由申請廠商所提供及確認 (The following sample(s) was/were submitted and identified by/on behalf of the applicant as)：

送樣廠商(Sample Submitted By)	:	長春人造樹脂廠股份有限公司 (CHANG CHUN PLASTICS CO., LTD.)
樣品名稱(Sample Description)	:	POLYBUTYLENE TEREPHTHALATE (PBT)
樣品型號(Style/Item No.)	:	PBT (2000, 2000T, 2100, 4108, 4115, 4115F, 4120, 4130, 4130F, 4140, 4620, 4630, 4730, 4815, 4820, 4830, 4815G, 4830G)
收件日期(Sample Receiving Date)	:	2016/12/20
測試期間(Testing Period)	:	2016/12/20 TO 2016/12/27

==========

測試需求(Test Requested)：

(1) 依據客戶指定，參考RoHS 2011/65/EU Annex II及其修訂指令(EU) 2015/863測試鎘、鉛、汞、六價鉻、多溴聯苯、多溴聯苯醚, DBP, BBP, DEHP, DIBP. (As specified by client, with reference to RoHS 2011/65/EU Annex II and amending Directive (EU) 2015/863 to determine Cadmium, Lead, Mercury, Cr(VI), PBBs, PBDEs, DBP, BBP, DEHP, DIBP contents in the submitted sample.)

(2) 依據客戶指定，檢測 PAHs 及其他測項. (As specified by client, to test PAHs and other item(s).)

測試結果(Test Results)　：　請見下一頁 (Please refer to next pages).

結論(Conclusion)　：　(2) 根據客戶所提供的樣品，18項多環芳香烴測試結果符合德國產品安全委員會(AfPS) GS PAHs第 2 類「列於2009/48/EC之玩具」之限值要求. (Based upon the performed tests on the submitted sample, the test results of PAHs (18 items) comply with the limits of PAHs requirement (Category 2)「Toy under 2009/48/EC」 as set by German Committee on Product Safety (AfPS) GS PAHs.)

Troy Chang / Manager - Tech
Signed for and on behalf of
SGS TAIWAN LTD.
Chemical Laboratory - Taipei

This document is issued by the Company subject to its General Conditions of Service printed overleaf, available on request or accessible at http://www.sgs.com/en/Terms-and-Conditions.aspx and, for electronic format documents, subject to Terms and Conditions for Electronic Documents at http://www.sgs.com/en/Terms-and-Conditions/Termse-Document.aspx. Attention is drawn to the limitation of liability, indemnification and jurisdiction issues defined therein. Any holder of this document is advised that information contained hereon reflects the Company's findings at the time of its intervention only and within the limits of client's instruction, if any. The Company's sole responsibility is to its Client and this document does not exonerate parties to a transaction from exercising all their rights and obligations under the transaction documents. This document cannot be reproduced, except in full, without prior written approval of the Company. Any unauthorized alteration, forgery or falsification of the content or appearance of this document is unlawful and offenders may be prosecuted to the fullest extent of the law. Unless otherwise stated the results shown in this test report refer only to the sample(s) tested.

測試報告
Test Report

號碼(No.) : CE/2016/C4308　　日期(Date) : 2016/12/27　　

CHANG CHUN PLASTICS CO., LTD.
(CHANG CHUN CHEMICAL (ZHANGZHOU) CO., LTD.)
(CHANG CHUN CHEMICAL (JIANGSU) CO., LTD.)
7TH FL., NO. 301, SONG KIANG ROAD, TAIPEI, TAIWAN

測試結果(Test Results)

測試部位(PART NAME)No.1　　:　白色塑膠粒 (WHITE PLASTIC PELLETS)

測試項目 (Test Items)	單位 (Unit)	測試方法 (Method)	方法偵測極限值 (MDL)	結果 (Result) No.1
鎘 / Cadmium (Cd)	mg/kg	參考IEC 62321-5 (2013)，以感應耦合電漿原子發射光譜儀檢測. / With reference to IEC 62321-5 (2013) and performed by ICP-AES.	2	n.d.
鉛 / Lead (Pb)	mg/kg		2	5.90
汞 / Mercury (Hg)	mg/kg	參考IEC 62321-4 (2013)，以感應耦合電漿原子發射光譜儀檢測. / With reference to IEC 62321-4 (2013) and performed by ICP-AES.	2	n.d.
六價鉻 / Hexavalent Chromium Cr(VI)	mg/kg	參考IEC 62321 (2008)，以UV-VIS檢測. / With reference to IEC 62321 (2008) and performed by UV-VIS.	2	n.d.
鄰苯二甲酸二丁酯 / DBP (Dibutyl phthalate) (CAS No.: 84-74-2)	mg/kg	參考IEC 62321-8/CD (2013)，以氣相層析儀/質譜儀檢測. / With reference to IEC 62321-8/CD (2013). Analysis was performed by GC/MS.	50	n.d.
鄰苯二甲酸丁苯甲酯 / BBP (Butyl Benzyl phthalate) (CAS No.: 85-68-7)	mg/kg		50	n.d.
鄰苯二甲酸二 (2-乙基己基)酯 / DEHP (Di- (2-ethylhexyl) phthalate) (CAS No.: 117-81-7)	mg/kg		50	n.d.
鄰苯二甲酸二異癸酯 / DIDP (Di-isodecyl phthalate) (CAS No.: 26761-40-0; 68515-49-1)	mg/kg		50	n.d.
鄰苯二甲酸二異壬酯 / DINP (Di-isononyl phthalate) (CAS No.: 28553-12-0; 68515-48-0)	mg/kg		50	n.d.
鄰苯二甲酸二正辛酯 / DNOP (Di-n-octyl phthalate) (CAS No.: 117-84-0)	mg/kg		50	n.d.
鄰苯二甲酸二異丁酯 / DIBP (Di-isobutyl phthalate) (CAS No.: 84-69-5)	mg/kg		50	n.d.

This document is issued by the Company subject to its General Conditions of Service printed overleaf, available on request or accessible at http://www.sgs.com/en/Terms-and-Conditions.aspx and, for electronic format documents, subject to Terms and Conditions for Electronic Documents at http://www.sgs.com/en/Terms-and-Conditions/Termse-Document.aspx. Attention is drawn to the limitation of liability, indemnification and jurisdiction issues defined therein. Any holder of this document is advised that information contained hereon reflects the Company's findings at the time of its intervention only and within the limits of client's instruction, if any. The Company's sole responsibility is to its Client and this document does not exonerate parties to a transaction from exercising all their rights and obligations under the transaction documents. This document cannot be reproduced, except in full, without prior written approval of the Company. Any unauthorized alteration, forgery or falsification of the content or appearance of this document is unlawful and offenders may be prosecuted to the fullest extent of the law. Unless otherwise stated the results shown in this test report refer only to the sample(s) tested.

測試報告
Test Report

號碼(No.) : CE/2016/C4308　　日期(Date) : 2016/12/27　　

CHANG CHUN PLASTICS CO., LTD.
(CHANG CHUN CHEMICAL (ZHANGZHOU) CO., LTD.)
(CHANG CHUN CHEMICAL (JIANGSU) CO., LTD.)
7TH FL., NO. 301, SONG KIANG ROAD, TAIPEI, TAIWAN

測試項目 (Test Items)	單位 (Unit)	測試方法 (Method)	方法偵測極限值 (MDL)	結果 (Result) No. 1
多溴聯苯總和 / Sum of PBBs	mg/kg	參考IEC 62321-6 (2015)，以氣相層析/質譜儀檢測. / With reference to IEC 62321-6 (2015) and performed by GC/MS.	-	n.d.
一溴聯苯 / Monobromobiphenyl	mg/kg		5	n.d.
二溴聯苯 / Dibromobiphenyl	mg/kg		5	n.d.
三溴聯苯 / Tribromobiphenyl	mg/kg		5	n.d.
四溴聯苯 / Tetrabromobiphenyl	mg/kg		5	n.d.
五溴聯苯 / Pentabromobiphenyl	mg/kg		5	n.d.
六溴聯苯 / Hexabromobiphenyl	mg/kg		5	n.d.
七溴聯苯 / Heptabromobiphenyl	mg/kg		5	n.d.
八溴聯苯 / Octabromobiphenyl	mg/kg		5	n.d.
九溴聯苯 / Nonabromobiphenyl	mg/kg		5	n.d.
十溴聯苯 / Decabromobiphenyl	mg/kg		5	n.d.
多溴聯苯醚總和 / Sum of PBDEs	mg/kg		-	n.d.
一溴聯苯醚 / Monobromodiphenyl ether	mg/kg		5	n.d.
二溴聯苯醚 / Dibromodiphenyl ether	mg/kg		5	n.d.
三溴聯苯醚 / Tribromodiphenyl ether	mg/kg		5	n.d.
四溴聯苯醚 / Tetrabromodiphenyl ether	mg/kg		5	n.d.
五溴聯苯醚 / Pentabromodiphenyl ether	mg/kg		5	n.d.
六溴聯苯醚 / Hexabromodiphenyl ether	mg/kg		5	n.d.
七溴聯苯醚 / Heptabromodiphenyl ether	mg/kg		5	n.d.
八溴聯苯醚 / Octabromodiphenyl ether	mg/kg		5	n.d.
九溴聯苯醚 / Nonabromodiphenyl ether	mg/kg		5	n.d.
十溴聯苯醚 / Decabromodiphenyl ether	mg/kg		5	n.d.

This document is issued by the Company subject to its General Conditions of Service printed overleaf, available on request or accessible at http://www.sgs.com/en/Terms-and-Conditions.aspx and, for electronic format documents, subject to Terms and Conditions for Electronic Documents at http://www.sgs.com/en/Terms-and-Conditions/Termse-Document.aspx. Attention is drawn to the limitation of liability, indemnification and jurisdiction issues defined therein. Any holder of this document is advised that information contained hereon reflects the Company's findings at the time of its intervention only and within the limits of client's instruction, if any. The Company's sole responsibility is to its Client and this document does not exonerate parties to a transaction from exercising all their rights and obligations under the transaction documents. This document cannot be reproduced, except in full, without prior written approval of the Company. Any unauthorized alteration, forgery or falsification of the content or appearance of this document is unlawful and offenders may be prosecuted to the fullest extent of the law. Unless otherwise stated the results shown in this test report refer only to the sample(s) tested.

測試報告
Test Report

CHANG CHUN PLASTICS CO., LTD.
(CHANG CHUN CHEMICAL (ZHANGZHOU) CO., LTD.)
(CHANG CHUN CHEMICAL (JIANGSU) CO., LTD.)
7TH FL., NO. 301, SONG KIANG ROAD, TAIPEI, TAIWAN

測試項目 (Test Items)	單位 (Unit)	測試方法 (Method)	方法偵測極限值 (MDL)	結果 (Result) No.1
多環芳香烴 / Polycyclic Aromatic Hydrocarbons (PAHs)				
苊 / Acenaphthene (CAS No.: 83-32-9)	mg/kg	參考AfPS GS 2014:01 PAK，以氣相層析/質譜儀檢測. / With reference to AfPS GS 2014:01 PAK. Analysis was performed by GC/MS.	0.2	n.d.
苊烯 / Acenaphthylene (CAS No.: 208-96-8)	mg/kg		0.2	n.d.
蒽 / Anthracene (CAS No.: 120-12-7)	mg/kg		0.2	n.d.
苯駢蒽 / Benzo[a]anthracene (CAS No.: 56-55-3)	mg/kg		0.2	n.d.
苯駢(a)芘 / Benzo[a]pyrene (CAS No.: 50-32-8)	mg/kg		0.2	n.d.
苯(b)苯駢芴 / Benzo[b]fluoranthene (CAS No.: 205-99-2)	mg/kg		0.2	n.d.
苯駢苝 / Benzo[g,h,i]perylene (CAS No.: 191-24-2)	mg/kg		0.2	n.d.
苯(k)苯駢芴 / Benzo[k]fluoranthene (CAS No.: 207-08-9)	mg/kg		0.2	n.d.
Chrysene (CAS No.: 218-01-9)	mg/kg		0.2	n.d.
二苯駢蒽 / Dibenzo[a,h]anthracene (CAS No.: 53-70-3)	mg/kg		0.2	n.d.
苯駢芴 / Fluoranthene (CAS No.: 206-44-0)	mg/kg		0.2	n.d.
芴 / Fluorene (CAS No.: 86-73-7)	mg/kg		0.2	n.d.
茚酮芘 / Indeno[1,2,3-c,d] pyrene (CAS No.: 193-39-5)	mg/kg		0.2	n.d.
萘 / Naphthalene (CAS No.: 91-20-3)	mg/kg		0.2	n.d.
菲 / Phenanthrene (CAS No.: 85-01-8)	mg/kg		0.2	n.d.
芘 / Pyrene (CAS No.: 129-00-0)	mg/kg		0.2	n.d.
苯(j)苯駢芴 / Benzo[j]fluoranthene (CAS No.: 205-82-3)	mg/kg		0.2	n.d.
苯駢(e)芘 / Benzo[e]pyrene (CAS No.: 192-97-2)	mg/kg		0.2	n.d.
多環芳香烴18項總和 / Sum of 18 PAHs	mg/kg		-	n.d.

This document is issued by the Company subject to its General Conditions of Service printed overleaf, available on request or accessible at http://www.sgs.com/en/Terms-and-Conditions.aspx and, for electronic format documents, subject to Terms and Conditions for Electronic Documents at http://www.sgs.com/en/Terms-and-Conditions/Termse-Document.aspx. Attention is drawn to the limitation of liability, indemnification and jurisdiction issues defined therein. Any holder of this document is advised that information contained hereon reflects the Company's findings at the time of its intervention only and within the limits of client's instruction, if any. The Company's sole responsibility is to its Client and this document does not exonerate parties to a transaction from exercising all their rights and obligations under the transaction documents. This document cannot be reproduced, except in full, without prior written approval of the Company. Any unauthorized alteration, forgery or falsification of the content or appearance of this document is unlawful and offenders may be prosecuted to the fullest extent of the law. Unless otherwise stated the results shown in this test report refer only to the sample(s) tested.

測試報告
Test Report

號碼(No.) : CE/2016/C4308　　日期(Date) : 2016/12/27　　頁數(Page): 5 of 15

CHANG CHUN PLASTICS CO., LTD.
(CHANG CHUN CHEMICAL (ZHANGZHOU) CO., LTD.)
(CHANG CHUN CHEMICAL (JIANGSU) CO., LTD.)
7TH FL., NO. 301, SONG KIANG ROAD, TAIPEI, TAIWAN

測試項目 (Test Items)	單位 (Unit)	測試方法 (Method)	方法偵測極限值 (MDL)	結果 (Result) No.1
六溴環十二烷及所有主要被辨別出的異構物 / Hexabromocyclododecane (HBCDD) and all major diastereoisomers identified (α- HBCDD, β- HBCDD, γ- HBCDD) (CAS No.: 25637-99-4 and 3194-55-6 (134237-51-7, 134237-50-6, 134237-52-8))	mg/kg	參考IEC 62321 (2008)，以氣相層析/質譜儀檢測. / With reference to IEC 62321 (2008). Analysis was performed by GC/MS.	5	n.d.
全氟辛酸 / PFOA (CAS No.: 335-67-1)	mg/kg	參考US EPA 3550C (2007)，以液相層析/質譜儀檢測. / With reference to US EPA 3550C (2007). Analysis was performed by LC/MS.	10	n.d.
全氟辛烷磺酸 / Perfluorooctane sulfonates (PFOS-Acid, Metal Salt, Amide)	mg/kg	參考US EPA 3550C (2007)，以液相層析/質譜儀檢測. / With reference to US EPA 3550C (2007). Analysis was performed by LC/MS.	10	n.d.
四溴雙酚-A / Tetrabromobisphenol A (TBBP-A) (CAS No.: 79-94-7)	mg/kg	參考Global SOP RSTS-E&E-121 (2012)，以液相層析/質譜儀分析. / With reference to Global SOP RSTS-E&E-121 (2012). Analysis was performed by LC/MS.	10	n.d.

備註(Note)：

1. mg/kg = ppm；0.1wt% = 1000ppm
2. n.d. = Not Detected (未檢出)
3. MDL = Method Detection Limit (方法偵測極限值)
4. "-" = Not Regulated (無規格值)

This document is issued by the Company subject to its General Conditions of Service printed overleaf, available on request or accessible at http://www.sgs.com/en/Terms-and-Conditions.aspx and, for electronic format documents, subject to Terms and Conditions for Electronic Documents at http://www.sgs.com/en/Terms-and-Conditions/Termse-Document.aspx. Attention is drawn to the limitation of liability, indemnification and jurisdiction issues defined therein. Any holder of this document is advised that information contained hereon reflects the Company's findings at the time of its intervention only and within the limits of client's instruction, if any. The Company's sole responsibility is to its Client and this document does not exonerate parties to a transaction from exercising all their rights and obligations under the transaction documents. This document cannot be reproduced, except in full, without prior written approval of the Company. Any unauthorized alteration, forgery or falsification of the content or appearance of this document is unlawful and offenders may be prosecuted to the fullest extent of the law. Unless otherwise stated the results shown in this test report refer only to the sample(s) tested.

CHANG CHUN PLASTICS CO., LTD.
(CHANG CHUN CHEMICAL (ZHANGZHOU) CO., LTD.)
(CHANG CHUN CHEMICAL (JIANGSU) CO., LTD.)
7TH FL., NO. 301, SONG KIANG ROAD, TAIPEI, TAIWAN

PFOS參考資訊(Reference Information) : 持久性有機污染物 POPs - (EU) 757/2010

PFOS濃度在物質或製備中不得超過0.001%(10ppm)，在半成品、成品或零部件中不得超過0.1%(1000ppm)，在紡織品或塗層材料中不得超過1μg/m²。

(Outlawing PFOS as substances or preparations in concentrations above 0.001% (10ppm), in semi-finished products or articles or parts at a level above 0.1%(1000ppm), in textiles or other coated materials above 1μg/m².)

This document is issued by the Company subject to its General Conditions of Service printed overleaf, available on request or accessible at http://www.sgs.com/en/Terms-and-Conditions.aspx and, for electronic format documents, subject to Terms and Conditions for Electronic Documents at http://www.sgs.com/en/Terms-and-Conditions/Termse-Document.aspx. Attention is drawn to the limitation of liability, indemnification and jurisdiction issues defined therein. Any holder of this document is advised that information contained hereon reflects the Company's findings at the time of its intervention only and within the limits of client's instruction, if any. The Company's sole responsibility is to its Client and this document does not exonerate parties to a transaction from exercising all their rights and obligations under the transaction documents. This document cannot be reproduced, except in full, without prior written approval of the Company. Any unauthorized alteration, forgery or falsification of the content or appearance of this document is unlawful and offenders may be prosecuted to the fullest extent of the law. Unless otherwise stated the results shown in this test report refer only to the sample(s) tested.

CHANG CHUN PLASTICS CO., LTD.
(CHANG CHUN CHEMICAL (ZHANGZHOU) CO., LTD.)
(CHANG CHUN CHEMICAL (JIANGSU) CO., LTD.)
7TH FL., NO. 301, SONG KIANG ROAD, TAIPEI, TAIWAN

△ 德國產品安全委員會(AfPS) GS PAHs 要求 /
AfPS (German commission for Product Safety): GS PAHs requirements

項目 (Parameter)	第1類(Category 1)	第2類(Category 2)		第3類(Category 3)	
	意圖放入嘴內的材料或玩具會與皮膚有所接觸(超過30秒). (Material indented to be put in the mouth or toys with intended skin contact (longer than 30 s).)	不屬於第1類的材料並可預見與皮膚接觸逾30秒(長期或經常與皮膚接觸). (Materials not falling under category 1 with foreseeable contact to skin for longer than 30 seconds (long-term skin or frequent contact).)		可預見與皮膚接觸短於30秒(短期與皮膚接觸), 以及不屬於第1類或第2類的材料. (Materials not falling under category 1 or 2 with foreseeable contact to skin for less than 30 seconds (short-term skin contact).)	
		列於2009/48/EC之玩具 (Toy under 2009/48/EC)	列於德國產品安全法之其他產品 (Other products under ProdSG)	列於2009/48/EC之玩具 (Toy under 2009/48/EC)	列於德國產品安全法之其他產品 (Other products under ProdSG)
Naphthalene	< 1	< 2		< 10	
Acenaphthylene Acenaphthene Fluorene Phenanthrene Anthracene Fluoranthene Pyrene	< 1 Sum	< 5 Sum	< 10 Sum	< 20 Sum	< 50 Sum
Benzo[a]anthracene	< 0.2	< 0.2	< 0.5	< 0.5	< 1
Chrysene	< 0.2	< 0.2	< 0.5	< 0.5	< 1
Benzo[b]fluoranthene	< 0.2	< 0.2	< 0.5	< 0.5	< 1
Benzo[j]fluoranthene	< 0.2	< 0.2	< 0.5	< 0.5	< 1
Benzo[k]fluoranthene	< 0.2	< 0.2	< 0.5	< 0.5	< 1
Benzo[a]pyrene	< 0.2	< 0.2	< 0.5	< 0.5	< 1
Benzo[e]pyrene	< 0.2	< 0.2	< 0.5	< 0.5	< 1
Indeno[1,2,3-c,d] pyrene	< 0.2	< 0.2	< 0.5	< 0.5	< 1
Dibenzo[a,h]anthracene	< 0.2	< 0.2	< 0.5	< 0.5	< 1
Benzo[g,h,i]perylene	< 0.2	< 0.2	< 0.5	< 0.5	< 1
18項PAH總濃度 (Sum of 18 PAH)	< 1	< 5	< 10	< 20	< 50

單位(Unit)：mg/kg

This document is issued by the Company subject to its General Conditions of Service printed overleaf, available on request or accessible at http://www.sgs.com/en/Terms-and-Conditions.aspx and, for electronic format documents, subject to Terms and Conditions for Electronic Documents at http://www.sgs.com/en/Terms-and-Conditions/Termse-Document.aspx. Attention is drawn to the limitation of liability, indemnification and jurisdiction issues defined therein. Any holder of this document is advised that information contained hereon reflects the Company's findings at the time of its intervention only and within the limits of client's instruction, if any. The Company's sole responsibility is to its Client and this document does not exonerate parties to a transaction from exercising all their rights and obligations under the transaction documents. This document cannot be reproduced, except in full, without prior written approval of the Company. Any unauthorized alteration, forgery or falsification of the content or appearance of this document is unlawful and offenders may be prosecuted to the fullest extent of the law. Unless otherwise stated the results shown in this test report refer only to the sample(s) tested.

CHANG CHUN PLASTICS CO., LTD.
(CHANG CHUN CHEMICAL (ZHANGZHOU) CO., LTD.)
(CHANG CHUN CHEMICAL (JIANGSU) CO., LTD.)
7TH FL., NO. 301, SONG KIANG ROAD, TAIPEI, TAIWAN

重金屬流程圖 / Analytical flow chart of Heavy Metal

根據以下的流程圖之條件，樣品已完全溶解。(六價鉻測試方法除外)
These samples were dissolved totally by pre-conditioning method according to below flow chart. (Cr^{6+} test method excluded)

- 測試人員：王志瑋 / Technician : JR Wang
- 測試負責人：張啟興 / Supervisor: Troy Chang

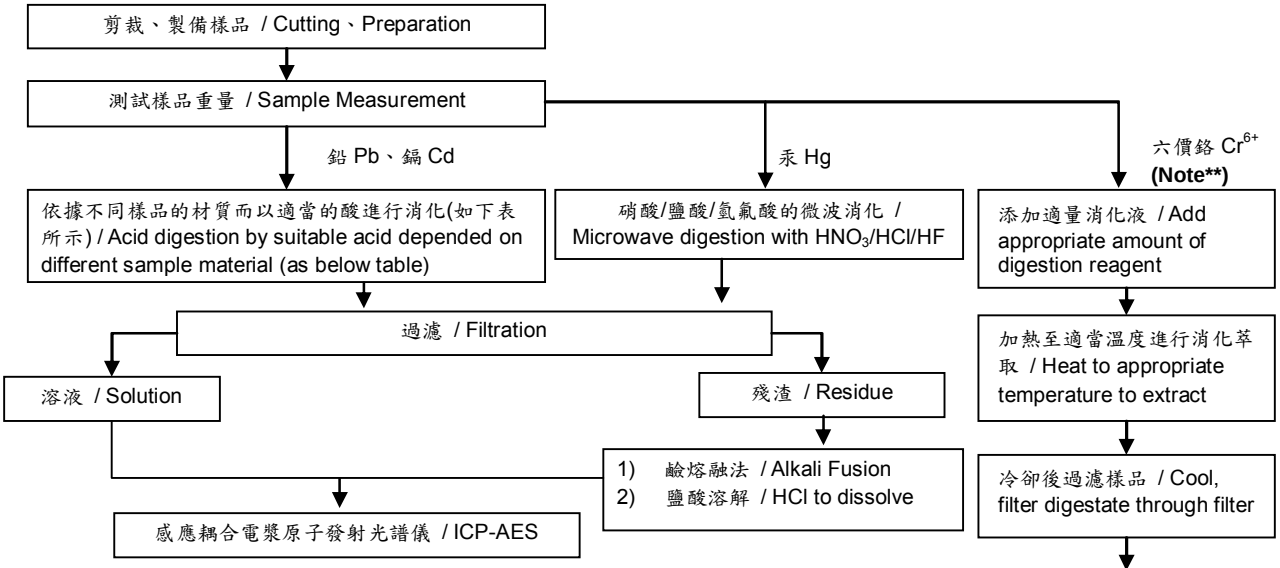

樣品材質 / Sample Material	消化酸液種類 / Digestion Acid
鋼，銅，鋁，焊錫 / Steel, copper, aluminum, solder	王水，硝酸，鹽酸，氫氟酸，雙氧水 / Aqua regia, HNO_3, HCl, HF, H_2O_2
玻璃 / Glass	硝酸,氫氟酸 / HNO_3/HF
金，鉑，鈀，陶瓷 / Gold, platinum, palladium, ceramic	王水 / Aqua regia
銀 / Silver	硝酸 / HNO_3
塑膠 / Plastic	硫酸，雙氧水，硝酸，鹽酸 / H_2SO_4, H_2O_2, HNO_3, HCl
其他 / Others	加入適當的試劑至完全溶解 / Added appropriate reagent to total digestion

Note (For IEC 62321)**

(1) 針對非金屬材料加入鹼性消化液，加熱至 90~95℃ 萃取. / For non-metallic material, add alkaline digestion reagent and heat to 90~95℃.
(2) 針對金屬材料加入純水，加熱至沸騰萃取. / For metallic material, add pure water and heat to boiling.

This document is issued by the Company subject to its General Conditions of Service printed overleaf, available on request or accessible at http://www.sgs.com/en/Terms-and-Conditions.aspx and, for electronic format documents, subject to Terms and Conditions for Electronic Documents at http://www.sgs.com/en/Terms-and-Conditions/Termse-Document.aspx. Attention is drawn to the limitation of liability, indemnification and jurisdiction issues defined therein. Any holder of this document is advised that information contained hereon reflects the Company's findings at the time of its intervention only and within the limits of client's instruction, if any. The Company's sole responsibility is to its Client and this document does not exonerate parties to a transaction from exercising all their rights and obligations under the transaction documents. This document cannot be reproduced, except in full, without prior written approval of the Company. Any unauthorized alteration, forgery or falsification of the content or appearance of this document is unlawful and offenders may be prosecuted to the fullest extent of the law. Unless otherwise stated the results shown in this test report refer only to the sample(s) tested.

CHANG CHUN PLASTICS CO., LTD.
(CHANG CHUN CHEMICAL (ZHANGZHOU) CO., LTD.)
(CHANG CHUN CHEMICAL (JIANGSU) CO., LTD.)
7TH FL., NO. 301, SONG KIANG ROAD, TAIPEI, TAIWAN

多環芳香烴分析流程圖 / Analytical flow chart - PAHs (Polycyclic Aromatic Hydrocarbons)

- 測試人員：涂雅苓 / Technician: Yaling Tu
- 測試負責人：張啟興 / Supervisor: Troy Chang

樣品前處理 / Sample pre-treatment

↓

以甲苯溶液萃取(超音波萃取法) / Sample extracted (ultrasonic extraction) by Toluene solvent

↓

以氣相層析質譜儀分析 / Analysis was performed by GC/MS

↓

數據 / Data

This document is issued by the Company subject to its General Conditions of Service printed overleaf, available on request or accessible at http://www.sgs.com/en/Terms-and-Conditions.aspx and, for electronic format documents, subject to Terms and Conditions for Electronic Documents at http://www.sgs.com/en/Terms-and-Conditions/Termse-Document.aspx. Attention is drawn to the limitation of liability, indemnification and jurisdiction issues defined therein. Any holder of this document is advised that information contained hereon reflects the Company's findings at the time of its intervention only and within the limits of client's instruction, if any. The Company's sole responsibility is to its Client and this document does not exonerate parties to a transaction from exercising all their rights and obligations under the transaction documents. This document cannot be reproduced, except in full, without prior written approval of the Company. Any unauthorized alteration, forgery or falsification of the content or appearance of this document is unlawful and offenders may be prosecuted to the fullest extent of the law. Unless otherwise stated the results shown in this test report refer only to the sample(s) tested.

CHANG CHUN PLASTICS CO., LTD.
(CHANG CHUN CHEMICAL (ZHANGZHOU) CO., LTD.)
(CHANG CHUN CHEMICAL (JIANGSU) CO., LTD.)
7TH FL., NO. 301, SONG KIANG ROAD, TAIPEI, TAIWAN

四溴雙酚-A 分析流程圖 / Analytical flow chart - TBBP-A

- 測試人員：涂雅苓 / Technician: Yaling Tu
- 測試負責人：張啟興 / Supervisor: Troy Chang

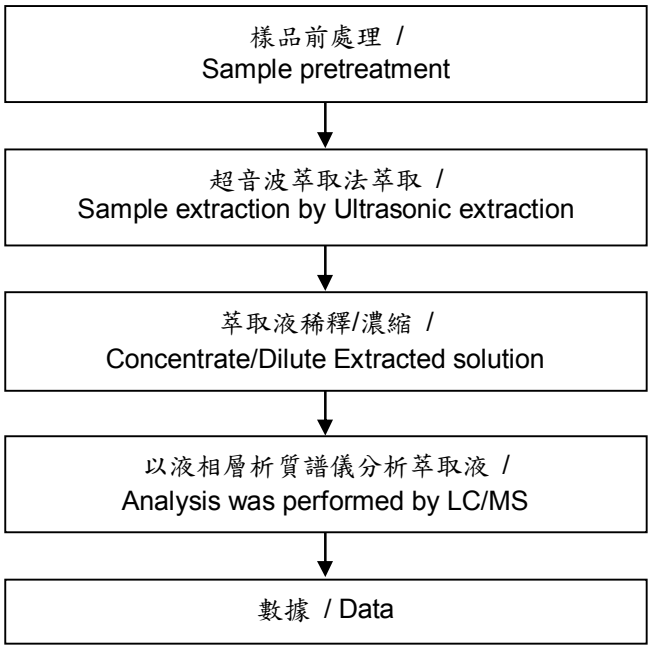

This document is issued by the Company subject to its General Conditions of Service printed overleaf, available on request or accessible at http://www.sgs.com/en/Terms-and-Conditions.aspx and, for electronic format documents, subject to Terms and Conditions for Electronic Documents at http://www.sgs.com/en/Terms-and-Conditions/Termse-Document.aspx. Attention is drawn to the limitation of liability, indemnification and jurisdiction issues defined therein. Any holder of this document is advised that information contained hereon reflects the Company's findings at the time of its intervention only and within the limits of client's instruction, if any. The Company's sole responsibility is to its Client and this document does not exonerate parties to a transaction from exercising all their rights and obligations under the transaction documents. This document cannot be reproduced, except in full, without prior written approval of the Company. Any unauthorized alteration, forgery or falsification of the content or appearance of this document is unlawful and offenders may be prosecuted to the fullest extent of the law. Unless otherwise stated the results shown in this test report refer only to the sample(s) tested.

CHANG CHUN PLASTICS CO., LTD.
(CHANG CHUN CHEMICAL (ZHANGZHOU) CO., LTD.)
(CHANG CHUN CHEMICAL (JIANGSU) CO., LTD.)
7TH FL., NO. 301, SONG KIANG ROAD, TAIPEI, TAIWAN

全氟辛酸/全氟辛烷磺酸分析流程圖 / Analytical flow chart - PFOA/PFOS

- 測試人員：涂雅苓 / Technician: Yaling Tu
- 測試負責人：張啟興 / Supervisor: Troy Chang

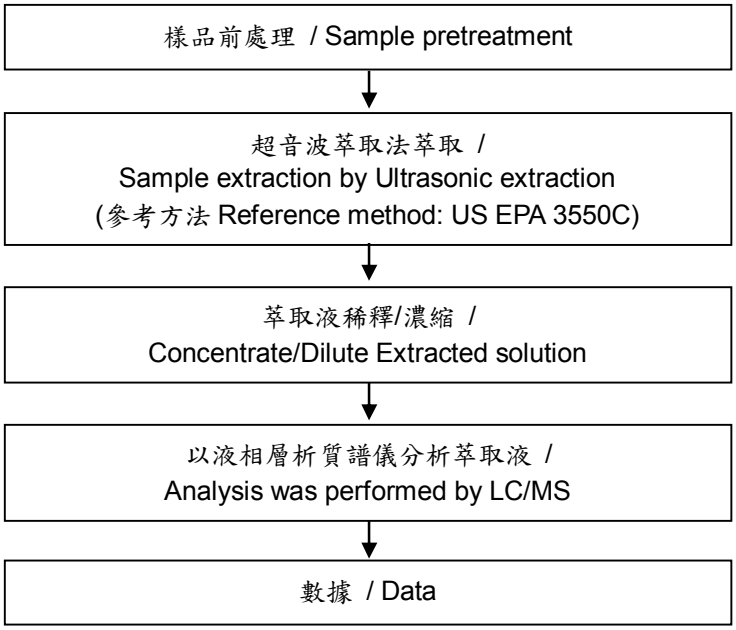

This document is issued by the Company subject to its General Conditions of Service printed overleaf, available on request or accessible at http://www.sgs.com/en/Terms-and-Conditions.aspx and, for electronic format documents, subject to Terms and Conditions for Electronic Documents at http://www.sgs.com/en/Terms-and-Conditions/Termse-Document.aspx. Attention is drawn to the limitation of liability, indemnification and jurisdiction issues defined therein. Any holder of this document is advised that information contained hereon reflects the Company's findings at the time of its intervention only and within the limits of client's instruction, if any. The Company's sole responsibility is to its Client and this document does not exonerate parties to a transaction from exercising all their rights and obligations under the transaction documents. This document cannot be reproduced, except in full, without prior written approval of the Company. Any unauthorized alteration, forgery or falsification of the content or appearance of this document is unlawful and offenders may be prosecuted to the fullest extent of the law. Unless otherwise stated the results shown in this test report refer only to the sample(s) tested.

CHANG CHUN PLASTICS CO., LTD.
(CHANG CHUN CHEMICAL (ZHANGZHOU) CO., LTD.)
(CHANG CHUN CHEMICAL (JIANGSU) CO., LTD.)
7TH FL., NO. 301, SONG KIANG ROAD, TAIPEI, TAIWAN

六溴環十二烷分析流程圖 / Analytical flow chart - HBCDD

- 測試人員：涂雅苓 / Technician: Yaling Tu
- 測試負責人：張啟興 / Supervisor: Troy Chang

樣品前處理 / Sample pretreatment

↓

樣品萃取 Sample extraction /
超音波萃取法 Ultrasonic method

↓

萃取液濃縮/稀釋 /
Concentrate/Dilute Extracted solution

↓

萃取液過濾 / Filter

↓

以氣相層析/質譜儀分析 /
Analysis was performed by GC/MS

↓

數據 / Data

This document is issued by the Company subject to its General Conditions of Service printed overleaf, available on request or accessible at http://www.sgs.com/en/Terms-and-Conditions.aspx and, for electronic format documents, subject to Terms and Conditions for Electronic Documents at http://www.sgs.com/en/Terms-and-Conditions/Termse-Document.aspx. Attention is drawn to the limitation of liability, indemnification and jurisdiction issues defined therein. Any holder of this document is advised that information contained hereon reflects the Company's findings at the time of its intervention only and within the limits of client's instruction, if any. The Company's sole responsibility is to its Client and this document does not exonerate parties to a transaction from exercising all their rights and obligations under the transaction documents. This document cannot be reproduced, except in full, without prior written approval of the Company. Any unauthorized alteration, forgery or falsification of the content or appearance of this document is unlawful and offenders may be prosecuted to the fullest extent of the law. Unless otherwise stated the results shown in this test report refer only to the sample(s) tested.

CHANG CHUN PLASTICS CO., LTD.
(CHANG CHUN CHEMICAL (ZHANGZHOU) CO., LTD.)
(CHANG CHUN CHEMICAL (JIANGSU) CO., LTD.)
7TH FL., NO. 301, SONG KIANG ROAD, TAIPEI, TAIWAN

可塑劑分析流程圖 / Analytical flow chart - Phthalate

- 測試人員：徐毓明 / Technician: Andy Shu
- 測試負責人：張啟興 / Supervisor : Troy Chang

【測試方法/Test method: IEC 62321-8】

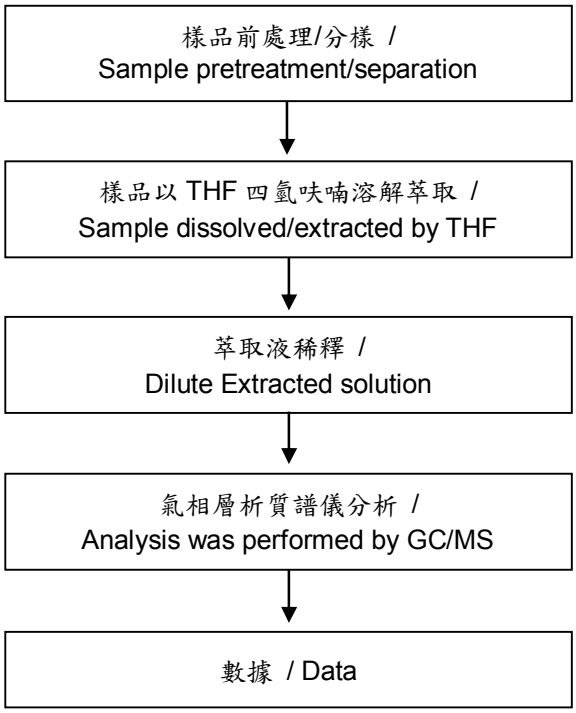

This document is issued by the Company subject to its General Conditions of Service printed overleaf, available on request or accessible at http://www.sgs.com/en/Terms-and-Conditions.aspx and, for electronic format documents, subject to Terms and Conditions for Electronic Documents at http://www.sgs.com/en/Terms-and-Conditions/Termse-Document.aspx. Attention is drawn to the limitation of liability, indemnification and jurisdiction issues defined therein. Any holder of this document is advised that information contained hereon reflects the Company's findings at the time of its intervention only and within the limits of client's instruction, if any. The Company's sole responsibility is to its Client and this document does not exonerate parties to a transaction from exercising all their rights and obligations under the transaction documents. This document cannot be reproduced, except in full, without prior written approval of the Company. Any unauthorized alteration, forgery or falsification of the content or appearance of this document is unlawful and offenders may be prosecuted to the fullest extent of the law. Unless otherwise stated the results shown in this test report refer only to the sample(s) tested.

CHANG CHUN PLASTICS CO., LTD.
(CHANG CHUN CHEMICAL (ZHANGZHOU) CO., LTD.)
(CHANG CHUN CHEMICAL (JIANGSU) CO., LTD.)
7TH FL., NO. 301, SONG KIANG ROAD, TAIPEI, TAIWAN

多溴聯苯/多溴聯苯醚分析流程圖 / Analytical flow chart - PBB/PBDE

- 測試人員：涂雅苓 / Technician: Yaling Tu
- 測試負責人：張啟興 / Supervisor: Troy Chang

初次測試程序 / First testing process
選擇性篩檢程序 / Optional screen process
確認程序 / Confirmation process

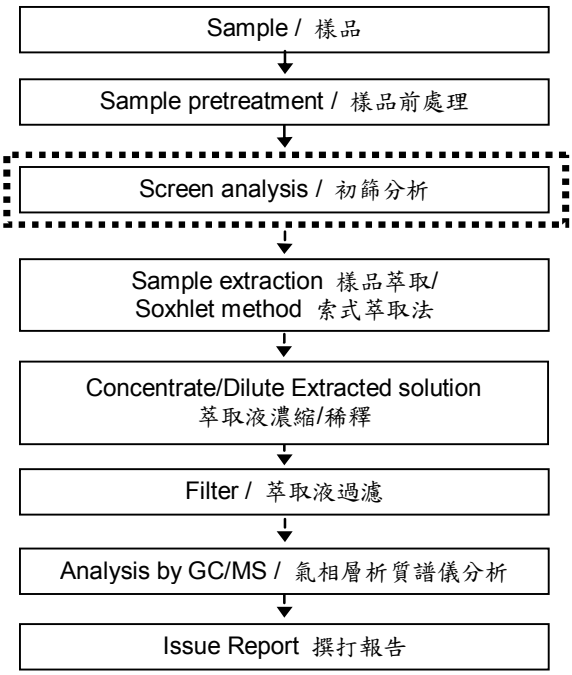

This document is issued by the Company subject to its General Conditions of Service printed overleaf, available on request or accessible at http://www.sgs.com/en/Terms-and-Conditions.aspx and, for electronic format documents, subject to Terms and Conditions for Electronic Documents at http://www.sgs.com/en/Terms-and-Conditions/Termse-Document.aspx. Attention is drawn to the limitation of liability, indemnification and jurisdiction issues defined therein. Any holder of this document is advised that information contained hereon reflects the Company's findings at the time of its intervention only and within the limits of client's instruction, if any. The Company's sole responsibility is to its Client and this document does not exonerate parties to a transaction from exercising all their rights and obligations under the transaction documents. This document cannot be reproduced, except in full, without prior written approval of the Company. Any unauthorized alteration, forgery or falsification of the content or appearance of this document is unlawful and offenders may be prosecuted to the fullest extent of the law. Unless otherwise stated the results shown in this test report refer only to the sample(s) tested.

CHANG CHUN PLASTICS CO., LTD.
(CHANG CHUN CHEMICAL (ZHANGZHOU) CO., LTD.)
(CHANG CHUN CHEMICAL (JIANGSU) CO., LTD.)
7TH FL., NO. 301, SONG KIANG ROAD, TAIPEI, TAIWAN

* 照片中如有箭頭標示，則表示為實際檢測之樣品/部位. *
(The tested sample / part is marked by an arrow if it's shown on the photo.)

CE/2016/C4308

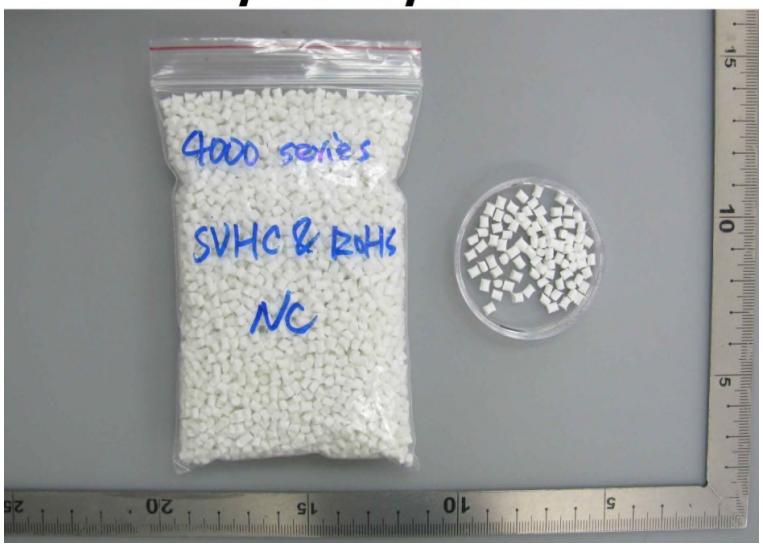

** 報告結尾 (End of Report) **

This document is issued by the Company subject to its General Conditions of Service printed overleaf, available on request or accessible at http://www.sgs.com/en/Terms-and-Conditions.aspx and, for electronic format documents, subject to Terms and Conditions for Electronic Documents at http://www.sgs.com/en/Terms-and-Conditions/Termse-Document.aspx. Attention is drawn to the limitation of liability, indemnification and jurisdiction issues defined therein. Any holder of this document is advised that information contained hereon reflects the Company's findings at the time of its intervention only and within the limits of client's instruction, if any. The Company's sole responsibility is to its Client and this document does not exonerate parties to a transaction from exercising all their rights and obligations under the transaction documents. This document cannot be reproduced, except in full, without prior written approval of the Company. Any unauthorized alteration, forgery or falsification of the content or appearance of this document is unlawful and offenders may be prosecuted to the fullest extent of the law. Unless otherwise stated the results shown in this test report refer only to the sample(s) tested.

測試報告
Test Report

號碼(No.): CC/2016/C0129　日期(Date): 2016/12/27　頁數(Page): 1 of 16

CHANG CHUN PLASTICS CO., LTD.
(CHANG CHUN CHEMICAL (ZHANGZHOU) CO., LTD.)
(CHANG CHUN CHEMICAL (JIANGSU) CO., LTD.)
7TH FL., NO. 301, SONG KIANG ROAD, TAIPEI, TAIWAN

以下測試樣品係由申請廠商所提供及確認 (The following sample(s) was/were submitted and identified by/on behalf of the applicant as):

送樣廠商(Sample Submitted By)	:	長春人造樹脂廠股份有限公司 (CHANG CHUN PLASTICS CO., LTD.)
樣品名稱(Sample Description)	:	POLYBUTYLENE TEREPHTHALATE (PBT)
樣品型號(Style/Item No.)	:	PBT (2000, 2000T, 2100, 4108, 4115, 4115F, 4120, 4130, 4130F, 4140, 4620, 4630, 4730, 4815, 4820, 4830, 4815G, 4830G)
收件日期(Sample Receiving Date)	:	2016/12/20
測試期間(Testing Period)	:	2016/12/20 TO 2016/12/27

==========

測試需求(Test Requested) :

173項高關注物質篩檢及額外的項目是依客戶特定要求. 高關注物質候選清單是根據歐洲化學總署(ECHA)於2016年12月19日，就關於REACH之Regulation (EC) No 1907/2006的公告。/ 173 Substances of Very High Concern (SVHC) screening in addition of item(s) by specific client's request. SVHC candidate list based on the publication by European Chemicals Agency (ECHA) on 2016 December 19, regarding Regulation (EC) No 1907/2006 concerning the REACH.

測試結果(Test Results) : 請見下一頁 (Please refer to next pages).

總結(Summary) : 根據歐洲法院對於REACH規範下成品定義的裁決以及指定範圍和分析技術，送測樣品中所選擇的零部件成品的高關注物質(SVHC) 測試結果濃度均小於0.1%(w/w) / According to the ruling of the Court of Justice of the European Union on the definition of an article under REACH, and the specified scope as well as analytical technique, the test results of the selected component article are ≤ 0.1% (w/w) in the submitted sample.

Troy Chang / Manager - Tech
Signed for and on behalf of
SGS TAIWAN LTD.
Chemical Laboratory - Taipei

This document is issued by the Company subject to its General Conditions of Service printed overleaf, available on request or accessible at http://www.sgs.com/en/Terms-and-Conditions.aspx and, for electronic format documents, subject to Terms and Conditions for Electronic Documents at http://www.sgs.com/en/Terms-and-Conditions/Termse-Document.aspx. Attention is drawn to the limitation of liability, indemnification and jurisdiction issues defined therein. Any holder of this document is advised that information contained hereon reflects the Company's findings at the time of its intervention only and within the limits of client's instruction, if any. The Company's sole responsibility is to its Client and this document does not exonerate parties to a transaction from exercising all their rights and obligations under the transaction documents. This document cannot be reproduced, except in full, without prior written approval of the Company. Any unauthorized alteration, forgery or falsification of the content or appearance of this document is unlawful and offenders may be prosecuted to the fullest extent of the law. Unless otherwise stated the results shown in this test report refer only to the sample(s) tested.

測試報告
Test Report

CHANG CHUN PLASTICS CO., LTD.
(CHANG CHUN CHEMICAL (ZHANGZHOU) CO., LTD.)
(CHANG CHUN CHEMICAL (JIANGSU) CO., LTD.)
7TH FL., NO. 301, SONG KIANG ROAD, TAIPEI, TAIWAN

測試樣品(Test Sample):　白色塑膠粒 (WHITE PLASTIC PELLETS)

測試方法(Test Method):

參照SGS內部方法RSTS-EE-SVHC-007. 由感應耦合電漿原子發射光譜儀、紫外光可見光譜儀、氣相層析/質譜儀、液相層析/質譜儀、氣相層析儀/火焰光度偵測器、液相層析/質譜儀/二極體陣列偵測器進行分析。(SGS In-House method-RSTS-EE-SVHC-007. Analyzed by ICP-AES, UV-VIS, GC/MS, LC/MS, GC/FPD, LC/MS/DAD.)

測試結果 (Test Results)

No.	物質名稱 (Substance Name)	RL (%)	濃度 (Concentration) (%)
1.	4,4' - 二氨基二苯甲烷 / 4,4' - Diaminodiphenylmethane (MDA) (CAS No.: 101-77-9)	0.05	n.d.
2.	二甲苯麝香 / 5-tert-butyl-2,4,6-trinitro- m-xylene (Musk Xylene) (CAS No.: 81-15-2)	0.05	n.d.
3.	短鏈氯化石蠟 / Alkanes, C10-13, chloro (Short Chain Chlorinated Paraffins) (CAS No.: 85535-84-8)	0.05	n.d.
4.	蒽 / Anthracene (CAS No.: 120-12-7)	0.05	n.d.
5.	鄰苯二甲酸丁苯甲酯 / BBP (Butyl Benzyl phthalate) (CAS No.: 85-68-7)	0.05	n.d.
6.	氧化雙三丁基錫 / Bis(tributyltin)oxide (TBTO)*** (CAS No.: 56-35-9)	-	n.d.
7.	五氧化二砷 / Diarsenic pentaoxide*** (CAS No.: 1303-28-2)	-	n.d.
8.	三氧化二砷 / Diarsenic trioxide*** (CAS No.: 1327-53-3)	-	n.d.
9.	鄰苯二甲酸二丁酯 / DBP (Dibutyl phthalate) (CAS No.: 84-74-2)	0.05	n.d.
10.	六溴環十二烷及所有主要被辨別出的異構物 / Hexabromocyclododecane (HBCDD) and all major diastereoisomers identified (α- HBCDD, β- HBCDD, γ- HBCDD) (CAS No.: 25637-99-4 and 3194-55-6 (134237-51-7, 134237-50-6, 134237-52-8))	0.05	n.d.
11.	砷酸氫鉛 / Lead hydrogen arsenate*** (CAS No.: 7784-40-9) (※1)	-	n.d.
12.	重鉻酸鈉 / Sodium dichromate*** (CAS No.: 7789-12-0; 10588-01-9(*))	-	n.d.
13.	三乙基砷酸酯 / Triethyl arsenate*** (CAS No.: 15606-95-8)	-	n.d.
14.	鄰苯二甲酸二 (2-乙基己基)酯 / DEHP (Bis (2-ethyl(hexyl) phthalate)) (CAS No.: 117-81-7)	0.05	n.d.
15.	2,4-二硝基甲苯 / 2,4-Dinitrotoluene (CAS No.: 121-14-2)	0.05	n.d.
16.	蒽油 / Anthracene oil (CAS No.: 90640-80-5) (**)	0.05	n.d.
17.	蒽油, 蒽糊 / Anthracene oil, anthracene paste (CAS No.: 90640-81-6) (**)	0.05	n.d.
18.	蒽油, 蒽糊, 蒽餾分 / Anthracene oil, anthracene paste, anthracene fraction (CAS No.: 91995-15-2) (**)	0.05	n.d.

This document is issued by the Company subject to its General Conditions of Service printed overleaf, available on request or accessible at http://www.sgs.com/en/Terms-and-Conditions.aspx and, for electronic format documents, subject to Terms and Conditions for Electronic Documents at http://www.sgs.com/en/Terms-and-Conditions/Termse-Document.aspx. Attention is drawn to the limitation of liability, indemnification and jurisdiction issues defined therein. Any holder of this document is advised that information contained hereon reflects the Company's findings at the time of its intervention only and within the limits of client's instruction, if any. The Company's sole responsibility is to its Client and this document does not exonerate parties to a transaction from exercising all their rights and obligations under the transaction documents. This document cannot be reproduced, except in full, without prior written approval of the Company. Any unauthorized alteration, forgery or falsification of the content or appearance of this document is unlawful and offenders may be prosecuted to the fullest extent of the law. Unless otherwise stated the results shown in this test report refer only to the sample(s) tested.

CHANG CHUN PLASTICS CO., LTD.
(CHANG CHUN CHEMICAL (ZHANGZHOU) CO., LTD.)
(CHANG CHUN CHEMICAL (JIANGSU) CO., LTD.)
7TH FL., NO. 301, SONG KIANG ROAD, TAIPEI, TAIWAN

No.	物質名稱 (Substance Name)	RL (%)	濃度 (Concentration) (%)
19.	蒽油, 蒽糊, 輕油 / Anthracene oil, anthracene paste, distn. Lights (CAS No.: 91995-17-4) (**)	0.05	n.d.
20.	蒽油, 含蒽量少 / Anthracene oil, anthracene-low (CAS No.: 90640-82-7) (**)	0.05	n.d.
21.	鄰苯二甲酸二異丁酯 / DIBP (Di-isobutyl phthalate) (CAS No.: 84-69-5)	0.05	n.d.
22.	鉻酸鉛 / Lead chromate*** (CAS No.: 7758-97-6) (※5)	-	n.d.
23.	鉬鉻紅；顏色索引: 顏料紅104 / Lead chromate molybdate sulphate red*** (C.I. Pigment Red 104) (CAS No.: 12656-85-8) (※5)	-	n.d.
24.	鉻酸鉛；顏色索引: 顏料黃34 / Lead sulfochromate yellow*** (C.I. Pigment Yellow 34) (CAS No.: 1344-37-2) (※5)	-	n.d.
25.	煤瀝青, 高溫 / Pitch, coal tar, high-temp. (CAS No.: 65996-93-2) (**)	0.05	n.d.
26.	磷酸三 (2-氯乙基)酯 / Tris(2-chloroethyl) phosphate (TCEP) (CAS No.: 115-96-8)	0.05	n.d.
27.	丙烯醯胺 / Acrylamide (CAS No.: 79-06-1)	0.05	n.d.
28.	重鉻酸銨 / Ammonium dichromate*** (CAS No.: 7789-09-5)	-	n.d.
29.	硼酸 / Boric acid*** (CAS No.: 10043-35-3; 11113-50-1)	-	n.d.
30.	無水四硼酸二鈉 / Disodium tetraborate, anhydrous*** (CAS No.: 1303-96-4, 1330-43-4, 12179-04-3)	-	n.d.
31.	鉻酸鉀 / Potassium chromate*** (CAS No.: 7789-00-6)	-	n.d.
32.	重鉻酸鉀 / Potassium dichromate*** (CAS No.: 7778-50-9)	-	n.d.
33.	鉻酸鈉 / Sodium chromate*** (CAS No.: 7775-11-3)	-	n.d.
34.	水合硼酸鈉 / Tetraboron disodium heptaoxide, hydrate (CAS No.: 12267-73-1) (*2)	-	n.d.
35.	三氯乙烯 / Trichloroethylene (CAS No.: 79-01-6)	0.05	n.d.
36.	乙二醇乙醚 / 2-Ethoxyethanol (CAS No.: 110-80-5)	0.05	n.d.
37.	乙二醇甲醚 / 2-Methoxyethanol (CAS No.: 109-86-4)	0.05	n.d.
38.	從三氧化鉻與其它寡聚體生成的酸類: 鉻酸 / Acids generated from chromium trioxide and their oligomers: Chromic acid*** (CAS No.: 7738-94-5)	-	n.d.
	從三氧化鉻與其它寡聚體生成的酸類: 重鉻酸 / Acids generated from chromium trioxide and their oligomers: Dichromic acid*** (CAS No.: 13530-68-2)	-	n.d.
	從三氧化鉻與其它寡聚體生成的酸類: 鉻酸與重鉻酸的寡聚體 / Acids generated from chromium trioxide and their oligomers: Oligomers of chromic acid and dichromic acid (*1)	-	n.d.

This document is issued by the Company subject to its General Conditions of Service printed overleaf, available on request or accessible at http://www.sgs.com/en/Terms-and-Conditions.aspx and, for electronic format documents, subject to Terms and Conditions for Electronic Documents at http://www.sgs.com/en/Terms-and-Conditions/Termse-Document.aspx. Attention is drawn to the limitation of liability, indemnification and jurisdiction issues defined therein. Any holder of this document is advised that information contained hereon reflects the Company's findings at the time of its intervention only and within the limits of client's instruction, if any. The Company's sole responsibility is to its Client and this document does not exonerate parties to a transaction from exercising all their rights and obligations under the transaction documents. This document cannot be reproduced, except in full, without prior written approval of the Company. Any unauthorized alteration, forgery or falsification of the content or appearance of this document is unlawful and offenders may be prosecuted to the fullest extent of the law. Unless otherwise stated the results shown in this test report refer only to the sample(s) tested.

CHANG CHUN PLASTICS CO., LTD.
(CHANG CHUN CHEMICAL (ZHANGZHOU) CO., LTD.)
(CHANG CHUN CHEMICAL (JIANGSU) CO., LTD.)
7TH FL., NO. 301, SONG KIANG ROAD, TAIPEI, TAIWAN

No.	物質名稱 (Substance Name)	RL (%)	濃度 (Concentration) (%)
39.	三氧化鉻 / Chromium trioxide ***(CAS No.: 1333-82-0)	-	n.d.
40.	碳酸鈷(二價) / Cobalt(II) carbonate*** (CAS No.: 513-79-1)	-	n.d.
41.	醋酸鈷(二價) / Cobalt(II) diacetate*** (CAS No.: 71-48-7)	-	n.d.
42.	硝酸鈷(二價) / Cobalt(II) dinitrate*** (CAS No.: 10141-05-6)	-	n.d.
43.	硫酸鈷(二價) / Cobalt(II) sulphate*** (CAS No.: 10124-43-3)	-	n.d.
44.	1,2,3-三氯丙烷 / 1,2,3-trichloropropane (CAS No.: 96-18-4)	0.05	n.d.
45.	鄰苯二甲酸二 (C6-8支鏈與直鏈)烷基酯，富C7 / 1,2-Benzenedicarboxylic acid, di-C6-8-branched alkyl esters, C7-rich (DIHP) (CAS No.: 71888-89-6)	0.05	n.d.
46.	鄰苯二甲酸二 (C7-11支鏈與直鏈)烷基酯 / 1,2-Benzenedicarboxylic acid, di-C7-11-branched and linear alkyl esters (DHNUP) (CAS No.: 68515-42-4)	0.05	n.d.
47.	N-甲基吡咯烷酮 / 1-methyl-2-pyrrolidone (CAS No.: 872-50-4)	0.05	n.d.
48.	乙二醇乙醚乙酸酯 / 2-ethoxyethyl acetate (CAS No.: 111-15-9)	0.05	n.d.
49.	聯氨 / Hydrazine (CAS No.: 7803-57-8; 302-01-2)	0.05	n.d.
50.	鉻酸鍶 / Strontium chromate*** (CAS No.: 7789-06-2)	-	n.d.
51.	二氯化鈷 / Cobalt dichloride (CAS No.: 7646-79-9)	0.005	n.d.
52.	1,2-二氯乙烷 / 1,2-Dichloroethane (CAS No.: 107-06-2)	0.05	n.d.
53.	4,4'-亞甲雙 (2-氯苯胺) / 2,2'-dichloro- 4,4'-methylenedianiline (MOCA) (CAS No.: 101-14-4)	0.05	n.d.
54.	鄰甲氧基苯胺 / 2-Methoxyaniline; o-Anisidine (CAS No.: 90-04-0)	0.05	n.d.
55.	對特辛基苯酚 / 辛基酚 / 4-(1,1,3,3-tetramethylbutyl) phenol, (4-tert-Octylphenol) (CAS No.: 140-66-9)	0.05	n.d.
56.	矽酸鋁，耐火陶瓷纖維 (主要成分濃度於可變範圍內) / Aluminosilicate, Refractory Ceramic Fibres【oxides of aluminium and silicon are the main components present (in the fibres) within variable concentration ranges】	0.05	n.d.
57.	砷酸 / Arsenic acid*** (CAS No.: 7778-39-4)	-	n.d.
58.	双(2-甲氧基乙基)醚 / Bis(2-methoxyethyl) ether (CAS No.: 111-96-6)	0.05	n.d.
59.	鄰苯二甲酸二甲氧基乙酯 / Bis(2-methoxyethyl) phthalate (CAS No.: 117-82-8)	0.05	n.d.
60.	砷酸鈣 / Calcium arsenate*** (CAS No.: 7778-44-1)	-	n.d.
61.	鉻酸鉻 / Dichromium tris (chromate)*** (CAS No.: 24613-89-6)	-	n.d.

This document is issued by the Company subject to its General Conditions of Service printed overleaf, available on request or accessible at http://www.sgs.com/en/Terms-and-Conditions.aspx and, for electronic format documents, subject to Terms and Conditions for Electronic Documents at http://www.sgs.com/en/Terms-and-Conditions/Termse-Document.aspx. Attention is drawn to the limitation of liability, indemnification and jurisdiction issues defined therein. Any holder of this document is advised that information contained hereon reflects the Company's findings at the time of its intervention only and within the limits of client's instruction, if any. The Company's sole responsibility is to its Client and this document does not exonerate parties to a transaction from exercising all their rights and obligations under the transaction documents. This document cannot be reproduced, except in full, without prior written approval of the Company. Any unauthorized alteration, forgery or falsification of the content or appearance of this document is unlawful and offenders may be prosecuted to the fullest extent of the law. Unless otherwise stated the results shown in this test report refer only to the sample(s) tested.

CHANG CHUN PLASTICS CO., LTD.
(CHANG CHUN CHEMICAL (ZHANGZHOU) CO., LTD.)
(CHANG CHUN CHEMICAL (JIANGSU) CO., LTD.)
7TH FL., NO. 301, SONG KIANG ROAD, TAIPEI, TAIWAN

No.	物質名稱 (Substance Name)	RL (%)	濃度 (Concentration) (%)
62.	甲醛與苯胺的寡聚體 / Formaldehyde, oligomeric reaction products with aniline (technical MDA) (CAS No.: 25214-70-4)	0.05	n.d.
63.	疊氮化鉛 / Lead diazide, Lead azide*** (CAS No.: 13424-46-9)	-	n.d.
64.	苦味酸鉛 / Lead dipicrate*** (CAS No.: 6477-64-1)	-	n.d.
65.	中性斯蒂酚酸鉛 / Lead styphnate*** (CAS No.: 15245-44-0)	-	n.d.
66.	N,N-二甲基乙醯胺 / N,N-dimethylacetamide (DMAC) (CAS No.: 127-19-5)	0.05	n.d.
67.	八氫氧化五鉻酸鋅 / Pentazinc chromate octahydroxide*** (CAS No.: 49663-84-5)	-	n.d.
68.	酚酞 / Phenolphthalein (CAS No.: 77-09-8)	0.05	n.d.
69.	氫氧化鉻酸鋅鉀 / Potassium hydroxyoctaoxodizincatedi- chromate*** (CAS No.: 11103-86-9)	-	n.d.
70.	砷酸鉛 / Trilead diarsenate*** (CAS No.: 3687-31-8) (※1)	-	n.d.
71.	鋯矽酸鋁，耐火陶瓷纖維（主要成分濃度於可變範圍內）/ Zirconia Aluminosilicate, Refractory Ceramic Fibres 【oxides of aluminium, silicon and zirconium are the main components present (in the fibres) within variable concentration ranges】	0.05	n.d.
72.	鹼性藍 26 [內含≥ 0.1% 的米氏酮或米氏鹼] / [4-[[4-anilino-1-naphthyl] [4-(dimethylamino) phenyl] methylene] cyclohexa-2,5-dien-1-ylidene] dimethylammonium chloride (C.I. Basic Blue 26) (CAS No.: 2580-56-5) [with ≥ 0.1% of Michler's ketone or Michler's base]	0.05	n.d.
73.	鹼性紫 3 [內含≥ 0.1% 的米氏酮或米氏鹼] / [4-[4,4'-bis(dimethylamino) benzhydrylidene] cyclohexa-2,5-dien-1-ylidene] dimethylammonium chloride (C.I. Basic Violet 3) (CAS No.: 548-62-9) [with ≥ 0.1% of Michler's ketone or Michler's base]	0.05	n.d.
74.	三甘醇二甲醚 / 1,2-bis (2-methoxyethoxy) ethane (TEGDME; triglyme) (CAS No.: 112-49-2)	0.05	n.d.
75.	乙二醇二甲醚 / 1,2-dimethoxyethane; ethylene glycol dimethyl ether (EGDME) (CAS No.: 110-71-4)	0.05	n.d.
76.	異氰尿酸三縮水甘油酯 / TGIC (1,3,5-tris(oxiranylmethyl)- 1,3,5-triazine-2,4,6 (1H,3H,5H)-trione) (CAS No.: 2451-62-9)	0.05	n.d.
77.	異氰尿酸β-三縮水甘油酯 / β-TGIC (1,3,5-tris [(2S and 2R)-2,3-epoxypropyl]-1,3,5-triazine-2,4,6- (1H,3H,5H)-trione) (CAS No.: 59653-74-6) (※3)	0.05	n.d.

This document is issued by the Company subject to its General Conditions of Service printed overleaf, available on request or accessible at http://www.sgs.com/en/Terms-and-Conditions.aspx and, for electronic format documents, subject to Terms and Conditions for Electronic Documents at http://www.sgs.com/en/Terms-and-Conditions/Termse-Document.aspx. Attention is drawn to the limitation of liability, indemnification and jurisdiction issues defined therein. Any holder of this document is advised that information contained hereon reflects the Company's findings at the time of its intervention only and within the limits of client's instruction, if any. The Company's sole responsibility is to its Client and this document does not exonerate parties to a transaction from exercising all their rights and obligations under the transaction documents. This document cannot be reproduced, except in full, without prior written approval of the Company. Any unauthorized alteration, forgery or falsification of the content or appearance of this document is unlawful and offenders may be prosecuted to the fullest extent of the law. Unless otherwise stated the results shown in this test report refer only to the sample(s) tested.

CHANG CHUN PLASTICS CO., LTD.
(CHANG CHUN CHEMICAL (ZHANGZHOU) CO., LTD.)
(CHANG CHUN CHEMICAL (JIANGSU) CO., LTD.)
7TH FL., NO. 301, SONG KIANG ROAD, TAIPEI, TAIWAN

No.	物質名稱 (Substance Name)	RL (%)	濃度 (Concentration) (%)
78.	α, α-二[(二甲氨基)苯基]-4-甲氨基苯甲醇 [內含≥ 0.1% 的米氏酮或米氏鹼] / 4,4'-bis (dimethylamino)-4''-(methylamino) trityl alcohol (CAS No.: 561-41-1) [with ≥ 0.1% of Michler's ketone or Michler's base]	0.05	n.d.
79.	4,4'-二(N,N-二甲氨基)二苯甲酮 (米氏酮) / 4,4'-bis (dimethylamino) benzophenone (Michler's ketone) (CAS No.: 90-94-8)	0.05	n.d.
80.	三氧化二硼 / Diboron trioxide*** (CAS No.: 1303-86-2)	-	n.d.
81.	甲醯胺 / Formamide (CAS No.: 75-12-7)	0.05	n.d.
82.	甲基磺酸鉛 / Lead(II) bis(methanesulfonate)*** (CAS No.: 17570-76-2)	-	n.d.
83.	4,4'-(对二甲氨基)二苯基甲烷 (米氏鹼) / N,N,N',N'-tetramethyl- 4,4'-methylenedianiline (Michler's base) (CAS No.: 101-61-1)	0.05	n.d.
84.	溶劑藍 4 [內含≥ 0.1% 的米氏酮或米氏鹼] / α,α-Bis[4-(dimethylamino) phenyl]-4 (phenylamino) naphthalene-1-methanol (C.I. Solvent Blue 4) (CAS No.: 6786-83-0) [with ≥ 0.1% of Michler's ketone or Michler's base]	0.05	n.d.
85.	[1,2-苯二羧酸根合]二氧化三鉛 / [Phthalato(2-)] dioxotrilead*** (CAS No.: 69011-06-9)	-	n.d.
86.	支鏈和直鏈1,2-苯二羧二戊酯 / 1,2-Benzenedicarboxylic acid, dipentylester, branched and linear (CAS No.: 84777-06-0)	0.05	n.d.
87.	乙二醇二乙醚 / 1,2-Diethoxyethane (CAS No.: 629-14-1)	0.05	n.d.
88.	正丙基溴 / 1-bromopropane (CAS No.: 106-94-5)	0.05	n.d.
89.	3-乙基-2-甲基-2-(3-甲基丁基)-1,3-惡唑烷 / 3-ethyl-2-methyl-2-(3-methylbutyl)-1,3-oxazolidine (CAS No.: 143860-04-2)	0.05	n.d.
90.	4-(1,1,3,3-四甲基丁基)苯酚, 乙氧基 [以及所有的被定義的物質，未知成分或可變成分的物質，聚合物和同系物] / 4-(1,1,3,3-tetramethylbutyl) phenol, ethoxylated [covering well-defined substances and UVCB substances, polymers and homologues]	0.05	n.d.
91.	4,4'-二氨基-3,3'-二甲基聯苯基甲烷 / 4,4'-methylenedi-o-toluidine (CAS No.: 838-88-0)	0.05	n.d.
92.	4,4'-二氨基二苯醚 / 4,4'-oxydianiline and its salts (CAS No.: 101-80-4)	0.05	n.d.
93.	4-苯基偶氮基苯胺 / 4-Aminoazobenzene (CAS No.: 60-09-3)	0.05	n.d.
94.	2,4-二氨基甲苯 / 4-methyl-m-phenylenediamine (2,4-toluenediamine) (CAS No.: 95-80-7)	0.05	n.d.

This document is issued by the Company subject to its General Conditions of Service printed overleaf, available on request or accessible at http://www.sgs.com/en/Terms-and-Conditions.aspx and, for electronic format documents, subject to Terms and Conditions for Electronic Documents at http://www.sgs.com/en/Terms-and-Conditions/Termse-Document.aspx. Attention is drawn to the limitation of liability, indemnification and jurisdiction issues defined therein. Any holder of this document is advised that information contained hereon reflects the Company's findings at the time of its intervention only and within the limits of client's instruction, if any. The Company's sole responsibility is to its Client and this document does not exonerate parties to a transaction from exercising all their rights and obligations under the transaction documents. This document cannot be reproduced, except in full, without prior written approval of the Company. Any unauthorized alteration, forgery or falsification of the content or appearance of this document is unlawful and offenders may be prosecuted to the fullest extent of the law. Unless otherwise stated the results shown in this test report refer only to the sample(s) tested.

CHANG CHUN PLASTICS CO., LTD.
(CHANG CHUN CHEMICAL (ZHANGZHOU) CO., LTD.)
(CHANG CHUN CHEMICAL (JIANGSU) CO., LTD.)
7TH FL., NO. 301, SONG KIANG ROAD, TAIPEI, TAIWAN

No.	物質名稱 (Substance Name)	RL (%)	濃度 (Concentration) (%)
95.	分支或線性的壬基酚，包括含有9個碳烷基鏈的所有獨立的同分異構體和所有含有線性或分支9個碳烷基鏈的UVCB物質 / 4-Nonylphenol, branched and linear [substances with a linear and/or branched alkyl chain with a carbon number of 9 covalently bound in position 4 to phenol, covering also UVCB- and well-defined substances which include any of the individual isomers or a combination thereof]	0.05	n.d.
96.	3-甲基-6-甲氧基苯胺 / 6-methoxy-m-toluidine (p-cresidine) (CAS No.: 120-71-8)	0.05	n.d.
97.	堿式醋酸鉛 / Acetic acid, lead salt, basic*** (CAS No.: 51404-69-4)	-	n.d.
98.	4-胺基聯苯 / Biphenyl-4-ylamine (CAS No.: 92-67-1)	0.05	n.d.
99.	十溴聯苯醚 / Bis(pentabromophenyl) ether (DecaBDE) (CAS No.: 1163-19-5)	0.05	n.d.
100.	六氫苯二甲酸酐 / Cyclohexane-1,2-dicarboxylic anhydride (HHPA), cis-cyclohexane-1,2- dicarboxylic anhydride, trans-cyclohexane-1,2- dicarboxylic anhydride (Hexahydrophthalic anhydride - HHPA) (CAS No.: 85-42-7, 13149-00-3, 14166-21-3)	0.05	n.d.
101.	偶氮[二]甲醯胺 / Diazene-1,2-dicarboxamide (C,C'-azodi(formamide)) (CAS No.: 123-77-3)	0.05	n.d.
102.	二氯二丁基錫 / Dibutyltin dichloride (DBTC)*** (CAS No.: 683-18-1)	-	n.d.
103.	硫酸二乙酯 / Diethyl sulphate (CAS No.: 64-67-5)	0.05	n.d.
104.	鄰苯二甲酸二異戊酯 / Diisopentylphthalate (CAS No.: 605-50-5)	0.05	n.d.
105.	硫酸二甲酯 / Dimethyl sulphate (CAS No.: 77-78-1)	0.05	n.d.
106.	2-(1-甲基丙基)-4,6-二硝基苯酚 / Dinoseb (CAS No.: 88-85-7)	0.05	n.d.
107.	雙(十八酸基)二氧代三鉛 / Dioxobis(stearato) trilead*** (CAS No.: 12578-12-0)	-	n.d.
108.	C16-18-脂肪酸鉛鹽 / Fatty acids, C16-18, lead salts*** (CAS No.: 91031-62-8)	-	n.d.
109.	呋喃 / Furan (CAS No.: 110-00-9)	0.05	n.d.
110.	全氟十一酸 / Henicosafluoroundecanoic acid (CAS No.: 2058-94-8)	0.05	n.d.
111.	全氟十四酸 / Heptacosafluorotetradecanoic acid (CAS No.: 376-06-7)	0.05	n.d.
112.	甲基六氫苯酐 / Hexahydromethylphathalic anhydride (CAS No.: 25550-51-0) 4-甲基六氫苯酐 / Hexahydro-4-methylphathalic anhydride (CAS No.: 19438-60-9) 1-甲基六氫苯酐 / Hexahydro-1-methylphathalic anhydride (CAS No.: 48122-14-1) 3-甲基六氫苯酐 / Hexahydro-3-methylphathalic anhydride (CAS No.: 57110-29-9)	0.05	n.d.
113.	四氟硼酸鉛 (II) / Lead bis(tetrafluoroborate)*** (CAS No.: 13814-96-5)	-	n.d.
114.	氨基氰鉛鹽 / Lead cyanamidate*** (CAS No.: 20837-86-9)	-	n.d.

This document is issued by the Company subject to its General Conditions of Service printed overleaf, available on request or accessible at http://www.sgs.com/en/Terms-and-Conditions.aspx and, for electronic format documents, subject to Terms and Conditions for Electronic Documents at http://www.sgs.com/en/Terms-and-Conditions/Termse-Document.aspx. Attention is drawn to the limitation of liability, indemnification and jurisdiction issues defined therein. Any holder of this document is advised that information contained hereon reflects the Company's findings at the time of its intervention only and within the limits of client's instruction, if any. The Company's sole responsibility is to its Client and this document does not exonerate parties to a transaction from exercising all their rights and obligations under the transaction documents. This document cannot be reproduced, except in full, without prior written approval of the Company. Any unauthorized alteration, forgery or falsification of the content or appearance of this document is unlawful and offenders may be prosecuted to the fullest extent of the law. Unless otherwise stated the results shown in this test report refer only to the sample(s) tested.

CHANG CHUN PLASTICS CO., LTD.
(CHANG CHUN CHEMICAL (ZHANGZHOU) CO., LTD.)
(CHANG CHUN CHEMICAL (JIANGSU) CO., LTD.)
7TH FL., NO. 301, SONG KIANG ROAD, TAIPEI, TAIWAN

No.	物質名稱 (Substance Name)	RL (%)	濃度 (Concentration) (%)
115.	硝酸鉛 / Lead dinitrate*** (CAS No.: 10099-74-8)	-	n.d.
116.	氧化鉛 / Lead oxide (lead monoxide)*** (CAS No.: 1317-36-8)	-	n.d.
117.	堿式硫酸鉛 / Lead oxide sulfate*** (CAS No.: 12036-76-9)	-	n.d.
118.	鈦酸鉛 / Lead titanium trioxide*** (CAS No.: 12060-00-3)	-	n.d.
119.	鈦酸鉛鋯 / Lead Titanium Zirconium Oxide*** (CAS No.: 12626-81-2)	-	n.d.
120.	甲氧基乙酸 / Methoxy acetic acid (CAS No.: 625-45-6)	0.05	n.d.
121.	環氧丙烷 / Propylene oxide; 1,2-epoxypropane; methyloxirane (CAS No.: 75-56-9)	0.05	n.d.
122.	N,N-二甲基甲醯胺 / N,N-dimethylformamide; dimethyl formamide (CAS No.: 68-12-2)	0.05	n.d.
123.	N-甲基乙醯胺 / N-methylacetamide (CAS No.: 79-16-3)	0.05	n.d.
124.	鄰苯二甲酸正戊異戊酯 / N-pentyl-isopentylphtalate (CAS No.: 776297-69-9)	0.05	n.d.
125.	鄰氨基偶氮甲苯 / o-aminoazotoluene (CAS No.: 97-56-3)	0.05	n.d.
126.	四氧化鉛 / Lead tetroxide (orange lead)*** (CAS No.: 1314-41-6)	-	n.d.
127.	鄰甲苯胺 / o-Toluidine; 2-Aminotoluene (CAS No.: 95-53-4)	0.05	n.d.
128.	全氟十三酸 / Pentacosafluorotridecanoic acid (CAS No.: 72629-94-8)	0.05	n.d.
129.	氧化鉛與硫酸鉛的複合物 / Pentalead tetraoxide sulphate*** (CAS No.: 12065-90-6)	-	n.d.
130.	C.I.顏料黃41 / Pyrochlore, antimony lead yellow*** (CAS No.: 8012-00-8)	-	n.d.
131.	含鉛的矽酸鋇 / Silicic acid, barium salt, lead-doped (※4) (CAS No.: 68784-75-8)	0.05	n.d.
132.	矽酸鉛 / Silicic acid, lead salt*** (CAS No.: 11120-22-2)	-	n.d.
133.	亞硫酸鉛(II) / Sulfurous acid, lead salt, dibasic*** (CAS No.: 62229-08-7)	-	n.d.
134.	四乙基鉛 / Tetraethyllead*** (CAS No.: 78-00-2)	-	n.d.
135.	三鹼式硫酸鉛/ C.I. 顏料白 / Tetralead trioxide sulphate*** (CAS No.: 12202-17-4)	-	n.d.
136.	全氟十二酸 / Tricosafluorododecanoic acid (CAS No.: 307-55-1)	0.05	n.d.
137.	堿式碳酸鉛 / Trilead bis(carbonate) dihydroxide (basic lead carbonate)*** (CAS No.: 1319-46-6)	-	n.d.
138.	磷酸氧化鉛 / Trilead dioxide phosphonate*** (CAS No.: 12141-20-7)	-	n.d.

This document is issued by the Company subject to its General Conditions of Service printed overleaf, available on request or accessible at http://www.sgs.com/en/Terms-and-Conditions.aspx and, for electronic format documents, subject to Terms and Conditions for Electronic Documents at http://www.sgs.com/en/Terms-and-Conditions/Termse-Document.aspx. Attention is drawn to the limitation of liability, indemnification and jurisdiction issues defined therein. Any holder of this document is advised that information contained hereon reflects the Company's findings at the time of its intervention only and within the limits of client's instruction, if any. The Company's sole responsibility is to its Client and this document does not exonerate parties to a transaction from exercising all their rights and obligations under the transaction documents. This document cannot be reproduced, except in full, without prior written approval of the Company. Any unauthorized alteration, forgery or falsification of the content or appearance of this document is unlawful and offenders may be prosecuted to the fullest extent of the law. Unless otherwise stated the results shown in this test report refer only to the sample(s) tested.

CHANG CHUN PLASTICS CO., LTD.
(CHANG CHUN CHEMICAL (ZHANGZHOU) CO., LTD.)
(CHANG CHUN CHEMICAL (JIANGSU) CO., LTD.)
7TH FL., NO. 301, SONG KIANG ROAD, TAIPEI, TAIWAN

No.	物質名稱 (Substance Name)	RL (%)	濃度 (Concentration) (%)
139.	分支或線性的乙氧化壬基酚，包括含有9個碳烷基鏈的所有獨立的同分異構體和所有含有線性或分支9個碳烷基鏈的UVCB物質 / 4-Nonylphenol, branched and linear, ethoxylated [substances with a linear and/or branched alkyl chain with a carbon number of 9 covalently bound in position 4 to phenol, ethoxylated covering UVCB- and well-defined substances, polymers and homologues, which include any of the individual isomers and/or combinations thereof]	0.05	n.d.
140.	全氟辛酸銨 / Ammoniumpentadecafluorooctanoate (APFO)*** (CAS No.: 3825-26-1)	-	n.d.
141.	鎘 / Cadmium (Cd) (CAS No.: 7440-43-9)	0.005	n.d.
142.	氧化鎘 / Cadmium oxide*** (CAS No.: 1306-19-0)	-	n.d.
143.	鄰苯二甲酸二戊酯 / Dipentyl phthalate (CAS No.: 131-18-0)	0.05	n.d.
144.	全氟辛酸 / Pentadecafluorooctanoic acid (PFOA) (CAS No.: 335-67-1)	0.05	n.d.
145.	硫化鎘 / Cadmium sulphide*** (CAS No.: 1306-23-6)	-	n.d.
146.	鄰苯二甲酸二己酯 / Dihexyl phthalate (CAS No.: 84-75-3)	0.05	n.d.
147.	直接紅28 / Disodium 3,3'-[[1,1'-biphenyl]-4,4'-diylbis(azo)]bis(4-aminonaphthalene-1-sulphonate) (C.I. Direct Red 28) (CAS No.: 573-58-0)	0.05	n.d.
148.	直接黑38 / Disodium 4-amino-3-[[4'-[(2,4-diaminophenyl)azo][1,1'-biphenyl]-4-yl]azo] -5-hydroxy-6-(phenylazo)naphthalene-2,7-disulphonate (C.I. Direct Black 38) (CAS No.: 1937-37-7)	0.05	n.d.
149.	亞乙基硫脲 / Imidazolidine-2-thione; 2-imidazoline-2-thiol (CAS No.: 96-45-7)	0.05	n.d.
150.	醋酸鉛 / Lead di(acetate)*** (CAS No.: 301-04-2)	-	n.d.
151.	磷酸三(二甲苯)酯 / Trixylyl phosphate (CAS No.: 25155-23-1)	0.05	n.d.
152.	鄰苯二甲酸二己酯(支鏈和直鏈) / 1,2-Benzenedicarboxylic acid, dihexyl ester, branched and linear (CAS No.: 68515-50-4)	0.05	n.d.
153.	氯化鎘 / Cadmium chloride*** (CAS No.: 10108-64-2)	-	n.d.
154.	過硼酸鈉 / Sodium perborate; perboric acid, sodium salt***	-	n.d.
155.	過氧偏硼酸鈉 / Sodium peroxometaborate*** (CAS No.: 7632-04-4)	-	n.d.
156.	2-(2'-羥基-3',5'-二-叔-戊基苯基)苯並三唑 (紫外線吸收劑328) / 2-(2H-benzotriazol-2-yl)-4,6-ditertpentylphenol (UV-328) (CAS No.: 25973-55-1)	0.05	n.d.
157.	2-[2-羥基-3',5'-二-叔-丁基苯基]-苯並三唑 (紫外線吸收劑320) / 2-benzotriazol-2-yl-4,6-di-tert-butylphenol (UV-320) (CAS No.: 3846-71-7)	0.05	n.d.

This document is issued by the Company subject to its General Conditions of Service printed overleaf, available on request or accessible at http://www.sgs.com/en/Terms-and-Conditions.aspx and, for electronic format documents, subject to Terms and Conditions for Electronic Documents at http://www.sgs.com/en/Terms-and-Conditions/Termse-Document.aspx. Attention is drawn to the limitation of liability, indemnification and jurisdiction issues defined therein. Any holder of this document is advised that information contained hereon reflects the Company's findings at the time of its intervention only and within the limits of client's instruction, if any. The Company's sole responsibility is to its Client and this document does not exonerate parties to a transaction from exercising all their rights and obligations under the transaction documents. This document cannot be reproduced, except in full, without prior written approval of the Company. Any unauthorized alteration, forgery or falsification of the content or appearance of this document is unlawful and offenders may be prosecuted to the fullest extent of the law. Unless otherwise stated the results shown in this test report refer only to the sample(s) tested.

CHANG CHUN PLASTICS CO., LTD.
(CHANG CHUN CHEMICAL (ZHANGZHOU) CO., LTD.)
(CHANG CHUN CHEMICAL (JIANGSU) CO., LTD.)
7TH FL., NO. 301, SONG KIANG ROAD, TAIPEI, TAIWAN

No.	物質名稱 (Substance Name)	RL (%)	濃度 (Concentration) (%)
158.	二正辛基-雙(2-乙基己基巯基乙酸酯)錫 / 2-ethylhexyl 10-ethyl-4,4-dioctyl-7-oxo-8-oxa-3,5-dithia-4-stannatetradecanoate (DOTE)*** (CAS No.: 15571-58-1)	-	n.d.
159.	氟化鎘 / Cadmium fluoride*** (CAS No.: 7790-79-6)	-	n.d.
160.	硫酸鎘 / Cadmium sulphate*** (CAS No.: 10124-36-4; 31119-53-6)	-	n.d.
161.	二正辛基-雙(2-乙基己基巯基乙酸酯)錫和單辛基-三(2-乙基己基巯基乙酸酯)錫的反應物 / Reaction mass of 2-ethylhexyl 10-ethyl-4,4-dioctyl-7-oxo-8-oxa-3,5-dithia-4-stannatetradecanoate and 2-ethylhexyl 10-ethyl-4-[[2-[(2-ethylhexyl)oxy]-2-oxoethyl]thio]-4-octyl-7-oxo-8-oxa-3,5-dithia-4-stannatetradecanoate (reaction mass of DOTE and MOTE)***	-	n.d.
162.	鄰苯二甲酸二(C6-10)烷基酯; 鄰苯二甲酸二己、二辛、二癸酯混合物;鄰苯二甲酸二己酯 ≧ 0.3% / 1,2-benzenedicarboxylic acid, di-C6-10-alkyl esters; 1,2-benzenedicarboxylic acid, mixed decyl and hexyl and octyl diesters with ≧ 0.3% of dihexyl phthalate (CAS No.: 68515-51-5; 68648-93-1)	0.05	n.d.
163.	5-二級丁基-2-(2,4-二甲基環己-3-烯-1-基)-5-甲基-1,3-二氧環己烷[1],5-二級丁基-2-(4,6-二甲基環己-3-烯-1-基)-5-甲基-1,3-二氧環己烷[2],[任何[1]和[2]或者其任意組合的單獨異構物或其任何組合] / 5-sec-butyl-2-(2,4-dimethylcyclohex-3-en-1-yl)-5-methyl-1,3-dioxane [1], 5-sec-butyl-2-(4,6-dimethylcyclohex-3-en-1-yl)-5-methyl-1,3-dioxane [2] [covering any of the individual isomers of [1] and [2] or any combination thereof]	0.05	n.d.
164.	1,3-丙烷磺内酯 / 1,3-propanesultone (CAS No.: 1120-71-4)	0.05	n.d.
165.	2,4-二-叔丁基-6-(5-氯-2H-苯并三唑-2-基)苯酚(紫外線吸收劑327) / 2,4-di-tert-butyl-6-(5-chlorobenzotriazol-2-yl)phenol (UV-327) (CAS No.: 3864-99-1)	0.05	n.d.
166.	2-(3-仲-丁基-5-叔丁基-2-羟苯基)苯并三唑(紫外線吸收劑 UV-350) / 2-(2H-benzotriazol-2-yl)-4-(tert-butyl)-6-(sec-butyl)phenol (UV-350) (CAS No.: 36437-37-3)	0.05	n.d.
167.	硝基苯 / Nitrobenzene (CAS No.: 98-95-3)	0.05	n.d.
168.	全氟壬酸 / Perfluorononan-1-oic acid (2,2,3,3,4,4,5,5,6,6,7,7,8,8,9,9,9-heptadecafluorononanoic acid and its sodium and ammonium salts (CAS No.: 375-95-1; 21049-39-8; 4149-60-4)	0.05	n.d.
169.	苯并(a)芘 / Benzo[def]chrysene (Benzo[a]pyrene) (CAS No.: 50-32-8)	0.05	n.d.
170.	雙酚A / 4,4'- isopropylidenediphenol (Bisphenol A) (CAS No.: 80-05-7)	0.05	n.d.

This document is issued by the Company subject to its General Conditions of Service printed overleaf, available on request or accessible at http://www.sgs.com/en/Terms-and-Conditions.aspx and, for electronic format documents, subject to Terms and Conditions for Electronic Documents at http://www.sgs.com/en/Terms-and-Conditions/Termse-Document.aspx. Attention is drawn to the limitation of liability, indemnification and jurisdiction issues defined therein. Any holder of this document is advised that information contained hereon reflects the Company's findings at the time of its intervention only and within the limits of client's instruction, if any. The Company's sole responsibility is to its Client and this document does not exonerate parties to a transaction from exercising all their rights and obligations under the transaction documents. This document cannot be reproduced, except in full, without prior written approval of the Company. Any unauthorized alteration, forgery or falsification of the content or appearance of this document is unlawful and offenders may be prosecuted to the fullest extent of the law. Unless otherwise stated the results shown in this test report refer only to the sample(s) tested.

CHANG CHUN PLASTICS CO., LTD.
(CHANG CHUN CHEMICAL (ZHANGZHOU) CO., LTD.)
(CHANG CHUN CHEMICAL (JIANGSU) CO., LTD.)
7TH FL., NO. 301, SONG KIANG ROAD, TAIPEI, TAIWAN

No.	物質名稱 (Substance Name)	RL (%)	濃度 (Concentration) (%)
171.	4-庚基苯酚，支鍊及直鍊，包括含有7個碳烷基鏈的所有獨立的同分異構體和所有含有線性或分支7個碳烷基鏈的UVCB物質 / 4-Heptylphenol, branched and linear [substances with a linear and/or branched alkyl chain with a carbon number of 7 covalently bound predominantly in position 4 to phenol, covering also UVCB- and well-defined substances which include any of the individual isomers or a combination thereof]	0.05	n.d.
172.	十九氟癸酸及其鈉和銨鹽 / Nonadecafluorodecanoic acid (PFDA) and its sodium and ammonium salts (CAS No.: 3108-42-7, 335-76-2, 3830-45-3)	0.05	n.d.
173.	對(1,1-二甲基丙基)苯酚 / p-(1,1- dimethylpropyl) phenol (PTAP) (CAS No.: 80-46-6)	0.05	n.d.

除歐洲化學總署(ECHA)於2016年12月19日所公告的SVHC範圍外, 客戶要求以下額外的篩檢(Additional screening by client's request outside the scope of SVHC as published by ECHA on 2016 December 19):

No.	物質名稱 (Substance Name)	RL (%)	濃度 (Concentration) (%)
1.	4-叔丁基苯酚 / 4-tert-butylphenol (CAS No.: 98-54-4)	0.05	n.d.
2.	1,2,4-苯三甲酸酐 / Benzene-1,2,4- tricarboxylic acid 1,2- anhydride (trimellitic anhydride) (CAS No.: 552-30-7)	0.05	n.d.

This document is issued by the Company subject to its General Conditions of Service printed overleaf, available on request or accessible at http://www.sgs.com/en/Terms-and-Conditions.aspx and, for electronic format documents, subject to Terms and Conditions for Electronic Documents at http://www.sgs.com/en/Terms-and-Conditions/Termse-Document.aspx. Attention is drawn to the limitation of liability, indemnification and jurisdiction issues defined therein. Any holder of this document is advised that information contained hereon reflects the Company's findings at the time of its intervention only and within the limits of client's instruction, if any. The Company's sole responsibility is to its Client and this document does not exonerate parties to a transaction from exercising all their rights and obligations under the transaction documents. This document cannot be reproduced, except in full, without prior written approval of the Company. Any unauthorized alteration, forgery or falsification of the content or appearance of this document is unlawful and offenders may be prosecuted to the fullest extent of the law. Unless otherwise stated the results shown in this test report refer only to the sample(s) tested.

CHANG CHUN PLASTICS CO., LTD.
(CHANG CHUN CHEMICAL (ZHANGZHOU) CO., LTD.)
(CHANG CHUN CHEMICAL (JIANGSU) CO., LTD.)
7TH FL., NO. 301, SONG KIANG ROAD, TAIPEI, TAIWAN

Remark：

1. 173項SVHC化學分析，依歐洲化學總署(ECHA)於2016年12月19日所公佈的清單，藉由現有的分析技術進行篩檢。(The chemical analysis of 173 SVHC is performed by means of currently available analytical techniques against the list published by ECHA on 2016 December 19.)

   http://echa.europa.eu/web/guest/candidate-list-table
2. 根據Regulation (EC) No 1907/2006 中第7條款第2項之規定，如果物質合乎第57條款之標準以及可依據第59(1)條之規定鑑別，且同時符合下列兩項狀況，任何成品之製造人和進口人應向歐洲化學總署(ECHA)通報：

   (a) 成品中所含物質每年超過1公噸。
   (b) 依重量百分比計算，物質濃度超過0.1% 。

   In accordance with Regulation (EC) No 1907/2006, any producer or importer of articles shall notify ECHA, in accordance with paragraph 2 of Article 7, if a substance meets the criteria in Article 57 and is identified in accordance with Article 59(1) of the Regulation,

   if (a) the substance is present in those articles in quantities totaling over one tonne per producer or importer per year; and (b) the substance is present in those articles above a concentration of 0.1% weight by weight (w/w).
3. Regulation (EC) No 1907/2006中第 33 條要求成品供應商，其成品所含物質符合第57條款的標準並依照第59(1)條款確定其濃度大於0.1wt%，應提供成品接受者充份可取得資訊，以確保成品的安全使用(至少包括物質的名稱)。

   Article 33 of Regulation (EC) No 1907/2006 requires supplier of an article containing a substance meeting the criteria in Article 57 and identified in accordance with Article 59(1) in a concentration above 0.1% weight by weight (w/w) shall provide the recipient of the article with sufficient information, available to the supplier, to allow safe use of the article including, as a minimum, the name of that substance.
4. 倘若SVHC超過限值，建議客戶確認含有該SVHC的零件，並要求實驗室進一步的定量分析而取得SVHC的確切濃度。
   If a SVHC is found over the reporting limit, client is suggested to identify the component which contains the SVHC and the exact concentration of the SVHC by requesting further quantitative analysis from the laboratory.

This document is issued by the Company subject to its General Conditions of Service printed overleaf, available on request or accessible at http://www.sgs.com/en/Terms-and-Conditions.aspx and, for electronic format documents, subject to Terms and Conditions for Electronic Documents at http://www.sgs.com/en/Terms-and-Conditions/Termse-Document.aspx. Attention is drawn to the limitation of liability, indemnification and jurisdiction issues defined therein. Any holder of this document is advised that information contained hereon reflects the Company's findings at the time of its intervention only and within the limits of client's instruction, if any. The Company's sole responsibility is to its Client and this document does not exonerate parties to a transaction from exercising all their rights and obligations under the transaction documents. This document cannot be reproduced, except in full, without prior written approval of the Company. Any unauthorized alteration, forgery or falsification of the content or appearance of this document is unlawful and offenders may be prosecuted to the fullest extent of the law. Unless otherwise stated the results shown in this test report refer only to the sample(s) tested.

CHANG CHUN PLASTICS CO., LTD.
(CHANG CHUN CHEMICAL (ZHANGZHOU) CO., LTD.)
(CHANG CHUN CHEMICAL (JIANGSU) CO., LTD.)
7TH FL., NO. 301, SONG KIANG ROAD, TAIPEI, TAIWAN

備註(Note)：

1. mg/kg = ppm；0.1wt% = 1000ppm
2. RL = Reporting Limit / 報告極限值
3. n.d. = not detected = below Reporting Limit / 未檢出
4. "-" = Not Regulated / 無規格值
5. (*): 重鉻酸鈉二水合物(CAS No.: 7789-12-0)含量 = 重鉻酸鈉含量 × 1.1374
   (conc. of Sodium dichromate dihydrate = conc. of sodium dichromate × 1.1374)
6. (**): 上述混合物的濃度是經由所獲得的成分比例介於被選擇標靶物及混合物所推估出來. / The concentrations of above-mentioned mixtures are evaluated per the gained composition rate between the selected marks and the mixtures.
7. F 參數換算表/F Parameter Conversion Table：http://twap.sgs.com/sgsrsts/chn/download-REACH_tw.asp
8. 分類/Classification：Please refer to http://twap.sgs.com/sgsrsts/chn/download-REACH_tw.asp
9. (＊1): 鉻酸與重鉻酸的寡聚體: 因為其寡聚體是由未知數的鉻酸或與重鉻酸所組成，而導致沒有固定分子量，因此以單體鉻酸或重鉻酸較為重要並應被考慮。/ Oligomers of chromic acid and dichromic acid : since the oligomers are made of the unknown amount of chromic acid or dichromic acid that results in no fixed molecular weight, therefore the monomer of chromic acid or dichromic acid is relevant and considered.
10. (＊2): 水合硼酸鈉: 依照歐洲化學總署解釋以無水四硼酸二鈉數據作為代表(歐洲化學總署回信編號 Ref no.: INC 000000032519) / Tetraboron disodium heptaoxide, hydrate: Only anhydrous form of disodium tetraborate is relevant and considered according to ECHA explanation (Ref no.: INC 000000032519).
11. ***: 該物質是由單辛基錫、二辛基錫、三丁基錫、二丁基錫、全氟辛酸或各別元素 (例如: 砷、鉛、六價鉻、硼、鈷、鋇、鎘)之測試結果計算得知. / The substance was calculated by the test results of MonooctylTin, Dioctyl Tin, Tributyl Tin, Dibutyl Tin, PFOA or element (Ex. Arsenic, Lead, Cr(VI), Boron, Cobalt, Barium, Cadmium respectively).

測試結果如下(The test result is given as):

物質名稱 (Substance Name)	RL (%)	濃度 (Concentration) (%)
三丁基錫 / Tributyl Tin (TBT)	0.05	n.d.
砷 / Arsenic (As) (※2)	0.005	n.d.
鉛 / Lead (Pb)	0.005	n.d.
六價鉻 / Hexavalent Chromium Cr(VI)	0.005	n.d.
硼 / Boron (B) (※2)	0.005	n.d.
鈷 / Cobalt (Co)	0.005	n.d.
二丁基錫 / Dibutyl Tin (DBT)	0.05	n.d.
鋇 / Barium (Ba)	0.005	n.d.
二辛基錫 / Dioctyl Tin (DOT)	0.0230	n.d.
單辛基錫 / MonooctylTin (MOT)	0.0138	n.d.

This document is issued by the Company subject to its General Conditions of Service printed overleaf, available on request or accessible at http://www.sgs.com/en/Terms-and-Conditions.aspx and, for electronic format documents, subject to Terms and Conditions for Electronic Documents at http://www.sgs.com/en/Terms-and-Conditions/Termse-Document.aspx. Attention is drawn to the limitation of liability, indemnification and jurisdiction issues defined therein. Any holder of this document is advised that information contained hereon reflects the Company's findings at the time of its intervention only and within the limits of client's instruction, if any. The Company's sole responsibility is to its Client and this document does not exonerate parties to a transaction from exercising all their rights and obligations under the transaction documents. This document cannot be reproduced, except in full, without prior written approval of the Company. Any unauthorized alteration, forgery or falsification of the content or appearance of this document is unlawful and offenders may be prosecuted to the fullest extent of the law. Unless otherwise stated the results shown in this test report refer only to the sample(s) tested.

CHANG CHUN PLASTICS CO., LTD.
(CHANG CHUN CHEMICAL (ZHANGZHOU) CO., LTD.)
(CHANG CHUN CHEMICAL (JIANGSU) CO., LTD.)
7TH FL., NO. 301, SONG KIANG ROAD, TAIPEI, TAIWAN

12. (※1): 此砷鉛化合物之濃度是取砷及鉛兩者各別換算出砷鉛化合物濃度，並取其最小值做為最後出報告之依據.
(Regarding the compound containing arsenic and lead, lead and arsenic are tested and respectively used for the calculation of the independent concentration of the compound containing arsenic and lead. The minimum value of the two independently calculated concentrations is used as the final concentration for the report.)
13. (※2): 被萃取出的溶出硼/砷是以感應耦合電漿原子發射光譜儀檢測得之. / The extracted soluble Boron / Arsenic are detected by ICP-AES.
14. (※3): 由於TGIC本身含有β-TGIC，依照ECHA 技術文件 β-TGIC與 TGIC 約為 1:10 比例，因此β-TGIC將以1/10 的TGIC計算濃度。/ TGIC is a mixture and also contains β-TGIC. According to the ECHA's technical dossier the ratio of β-TGIC to TGIC is around 1 to 10. Therefore β-TGIC is issued based on the above-mentioned ratio.
15. (※4): 只有在矽與鉛定性結果為陽性時，再以鋇之濃度換算之。/ Only if both qualitative results of lead and silicon are positive, the test result of the compound will be calculated based on the concentration of barium.
16. (※5): 此化合物之濃度是取六價鉻及鉛兩者各別換算出化合物濃度，並取其最小值做為最後出報告之依據.
(Regarding the compound containing Cr(VI) and lead, lead and Cr(VI) are tested and respectively used for the calculation of the independent concentration of the compound containing Cr(VI) and lead. The minimum value of the two independently calculated concentrations is used as the final concentration for the report.)

This document is issued by the Company subject to its General Conditions of Service printed overleaf, available on request or accessible at http://www.sgs.com/en/Terms-and-Conditions.aspx and, for electronic format documents, subject to Terms and Conditions for Electronic Documents at http://www.sgs.com/en/Terms-and-Conditions/Termse-Document.aspx. Attention is drawn to the limitation of liability, indemnification and jurisdiction issues defined therein. Any holder of this document is advised that information contained hereon reflects the Company's findings at the time of its intervention only and within the limits of client's instruction, if any. The Company's sole responsibility is to its Client and this document does not exonerate parties to a transaction from exercising all their rights and obligations under the transaction documents. This document cannot be reproduced, except in full, without prior written approval of the Company. Any unauthorized alteration, forgery or falsification of the content or appearance of this document is unlawful and offenders may be prosecuted to the fullest extent of the law. Unless otherwise stated the results shown in this test report refer only to the sample(s) tested.

CHANG CHUN PLASTICS CO., LTD.
(CHANG CHUN CHEMICAL (ZHANGZHOU) CO., LTD.)
(CHANG CHUN CHEMICAL (JIANGSU) CO., LTD.)
7TH FL., NO. 301, SONG KIANG ROAD, TAIPEI, TAIWAN

SVHC 分析流程圖 / Analytical flow chart of SVHC

- 測試人員：涂雅苓, 王志瑋 / Technician: Yaling Tu, JR Wang
- 測試負責人：張啟興 / Supervisor: Troy Chang

取樣 / Sampling

↓

樣品以酸消化，溶劑萃取預處理 /
Sample pretreated by acid digestion, solvent extraction

↓

由感應耦合電漿原子發射光譜儀、紫外光可見光譜儀、氣相層析/質譜儀、液相層析質譜儀、氣相層析儀/火焰光度偵測器、液相層析/質譜儀/二極體陣列偵測器進行分析。/ Analyzed by ICP-AES, UV-VIS, GC/MS, LC/MS, GC/FPD, LC/MS/DAD.

↓

數據 / Data

This document is issued by the Company subject to its General Conditions of Service printed overleaf, available on request or accessible at http://www.sgs.com/en/Terms-and-Conditions.aspx and, for electronic format documents, subject to Terms and Conditions for Electronic Documents at http://www.sgs.com/en/Terms-and-Conditions/Termse-Document.aspx. Attention is drawn to the limitation of liability, indemnification and jurisdiction issues defined therein. Any holder of this document is advised that information contained hereon reflects the Company's findings at the time of its intervention only and within the limits of client's instruction, if any. The Company's sole responsibility is to its Client and this document does not exonerate parties to a transaction from exercising all their rights and obligations under the transaction documents. This document cannot be reproduced, except in full, without prior written approval of the Company. Any unauthorized alteration, forgery or falsification of the content or appearance of this document is unlawful and offenders may be prosecuted to the fullest extent of the law. Unless otherwise stated the results shown in this test report refer only to the sample(s) tested.

測試報告
Test Report

CHANG CHUN PLASTICS CO., LTD.
(CHANG CHUN CHEMICAL (ZHANGZHOU) CO., LTD.)
(CHANG CHUN CHEMICAL (JIANGSU) CO., LTD.)
7TH FL., NO. 301, SONG KIANG ROAD, TAIPEI, TAIWAN

* 照片中如有箭頭標示，則表示為實際檢測之樣品/部位. *
(The tested sample / part is marked by an arrow if it's shown on the photo.)

CC/2016/C0129

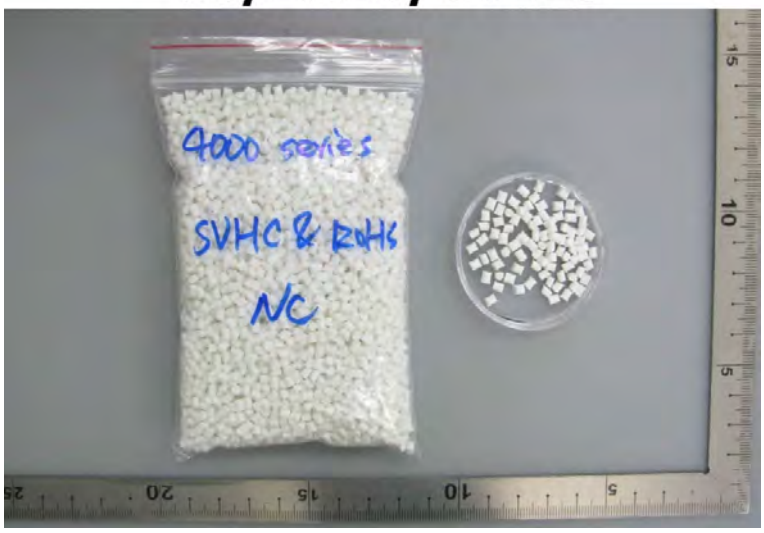

** 報告結尾(End of Report) **

This document is issued by the Company subject to its General Conditions of Service printed overleaf, available on request or accessible at http://www.sgs.com/en/Terms-and-Conditions.aspx and, for electronic format documents, subject to Terms and Conditions for Electronic Documents at http://www.sgs.com/en/Terms-and-Conditions/Termse-Document.aspx. Attention is drawn to the limitation of liability, indemnification and jurisdiction issues defined therein. Any holder of this document is advised that information contained hereon reflects the Company's findings at the time of its intervention only and within the limits of client's instruction, if any. The Company's sole responsibility is to its Client and this document does not exonerate parties to a transaction from exercising all their rights and obligations under the transaction documents. This document cannot be reproduced, except in full, without prior written approval of the Company. Any unauthorized alteration, forgery or falsification of the content or appearance of this document is unlawful and offenders may be prosecuted to the fullest extent of the law. Unless otherwise stated the results shown in this test report refer only to the sample(s) tested.

CTI 华测检测 CENTRE TESTING INTERNATIONAL

CMA 160000343904

检测报告
Test Report

报告编号 SCL01J032848E
Report No. SCL01J032848E

申请单位	浙江联和电子有限公司
Applicant	ZHEJIANG LIANHE ELECTRONICS CO,.LTD
地　　址	浙江省乐清市乐清湾港区创新路
Address	CHUANGXIN ROAD,YUEQING BAY PORT ZONE,YUEQING CITY,ZHEJIANG

以下测试之样品及样品信息由申请者提供并确认
The following sample(s) and sample information was/were submitted and identified by/on the behalf of the client

样品名称 Sample Name	端子 terminal
样品颜色 Color	银色 silver
材料名称 Material	磷铜、锡 Phosphor copper, tin
客户参考信息 Client Reference Information	请参见下页。 Please refer to the following page(s).
样品接收日期 Sample Received Date	2017.05.17 May 17, 2017
样品检测日期 Testing Period	2017.05.17-2017.05.22 May 17, 2017 to May 22, 2017
检测要求	根据客户要求，对所提交样品中的铅(Pb)，镉(Cd)，汞(Hg)，六价铬(Cr(VI))进行测试。
Test Requested	As specified by client, to test Lead(Pb), Cadmium(Cd), Mercury(Hg), Hexavalent Chromium(Cr(VI)) in the submitted sample(s).
检测依据/检测结果 **Test Method/Test Result(s)**	请参见下页。 Please refer to the following page(s).

主　检 Tested by	黄淑芳	审　核 Reviewed by	夏雅
批　准 Approved by	郑晴涛	日　期 Date	2017.05.22

郑晴涛
技术经理 Technical Manager

No. R289334249

华测检测认证集团股份有限公司
Centre Testing International Group Co.,Ltd.

广东省深圳市宝安区 70 区鸿威工业园
Hongwei Industrial Zone, Bao'an 70 District, Shenzhen, Guangdong, China

检测报告
Test Report

****

结论 Conclusion

测试样品 **Tested Sample**	依据指令 **According to directive**	结果 **Result**
提交样品 Submitted Sample	欧盟 RoHS 指令 2011/65/EU 及其修订指令 (EU) 2015/863 RoHS Directive 2011/65/EU with amendment (EU) 2015/863	符合 Pass

****

符合表示检测结果满足欧盟 RoHS 指令 2011/65/EU 及其修订指令(EU) 2015/863 要求的限值。

Pass means that the results shown on the report comply with the limits set by RoHS Directive 2011/65/EU with amendment (EU) 2015/863.

检测报告
Test Report

客户参考信息

1.0 SH SHD 1.25 51021 DF14 DF13 GH ZH PH PHB PA PHSD DF11 C1251 51047 51146 FI-S PHD YHD200 SMW SMH200 SMH200-H 20039WR 杜邦 2.0 XH/TJC3 XA HA XHB XHD XHE EH EI/小四 P 5264 5267 SZN SAN SCN SCND JC15 JC20 5102 5240 SMH250 SMP250 SMW250 25048HS 25045HP SM TJC8/杜邦 2.54 TJC8A/杜邦带锁 TJC8B TJC8H 5051/2510 543 美尚美 CH10 25415 43645 43020 43025 5500 5600 VH VHRR/YH396 VHR 35156 2139/3.96 90331 5195 5196 39612 FL 5557 5559 5566 5569 42474 42475 SL RV42 CL014/OTP EL YL 小型 EL QH NV 50300 50301 8981/大四 P 5058/5.08 5197 5198 5025 L6.2 VL VLP/VLR 3191 5199 TJC2 TJC2A TJC2B STV5 YHL500 YWL500 TJC4 TJC1 SMF Cy-X201/35108 35150 35151 35224 35180 35965 1806 110 2.8 42021 42022 42002 6.3 250 35955 SA SCS 35189 35196 DF11 MX3.0 1.58 51005 51006 BH3.5 BH4.0 63080 187 51004 TJC15 DF13 D230 D250 D480 D530 D280 D630 D430 D400 D450 U-T MKH F1001-T SIN-T 774 773 778 294 TU-JTK(SV) TU(SNB) TO-JTK(RV) MDD FDD TG-JT IDC AUTO CONNECTOR DJ7021 DT04 DT06 UY/K1 UY2/K2 UR/K3 UR2 UB/K4 UB2A UG/K5 U1R/K8 U1B K9 HJKT10 UDW2 314

Client Reference Information

1.0 SH SHD 1.25 51021 DF14 DF13 GH ZH PH PHB PA PHSD DF11 C1251 51047 51146 FI-S PHD YHD200 SMW SMH200 SMH200-H 20039WR DUBANG2.0 XH/TJC3 XA HA XHB XHD XHE EH EI/X4P 5264 5267 SZN SAN SCN SCND JC15 JC20 5102 5240 SMH250 SMP250 SMW250 25048HS 25045HP SM TJC8/DUBANG2.54 TJC8A/DUBANG-S TJC8B TJC8H 5051/2510 543 MEISHANGMEI CH10 25415 43645 43020 43025 5500 5600 VH VHRR/YH396 VHR 35156 2139/3.96 90331 5195 5196 39612 FL 5557 5559 5566 5569 42474 42475 SL RV42 CL014/OTP EL YL SMALL-EL QH NV 50300 50301 8981/D4P 5058/5.08 5197 5198 5025 L6.2 VL VLP/VLR 3191 5199 TJC2 TJC2A TJC2B STV5 YHL500 YWL500 TJC4 TJC1 SMF Cy-X201/35108 35150 35151 35224 35180 35965 1806 110 2.8 42021 42022 42002 6.3 250 35955 SA SCS 35189 35196 DF11 MX3.0 1.58 51005 51006 BH3.5 BH4.0 63080 187 51004 TJC15 DF13 D230 D250 D480 D530 D280 D630 D430 D400 D450 U-T MKH F1001-T SIN-T 774 773 778 294 TU-JTK(SV) TU(SNB) TO-JTK(RV) MDD FDD TG-JT IDC AUTO CONNECTOR DJ7021 DT04 DT06 UY/K1 UY2/K2 UR/K3 UR2 UB/K4 UB2A UG/K5 U1R/K8 U1B K9 HJKT10 UDW2 314

检测报告
Test Report

检测依据 Test Method

测试项目 Tested Item(s)	测试方法 Test Method	测试仪器 Measured Equipment(s)
铅 Lead (Pb)	IEC 62321-5:2013 Ed.1.0	ICP-OES
	参考 IEC 62321-5:2013 Ed.1.0 Refer to IEC 62321-5:2013 Ed.1.0	
镉 Cadmium (Cd)	IEC 62321-5:2013 Ed.1.0	ICP-OES
	参考 IEC 62321-5:2013 Ed.1.0 Refer to IEC 62321-5:2013 Ed.1.0	
汞 Mercury (Hg)	IEC 62321-4:2013 Ed.1.0	ICP-OES
	参考 IEC 62321-4:2013 Ed.1.0 Refer to IEC 62321-4:2013 Ed.1.0	
六价铬 Hexavalent Chromium (Cr(VI))	IEC 62321-7-1:2015	UV-Vis

检测结果 Test Result(s)

测试项目 **Tested Item(s)**	**结果 Result**		**方法检出限** **MDL**	**限值** **Limit**
	(1)	**(2)**		
铅 Lead (Pb)	N.D.	38 mg/kg	2 mg/kg	1000 mg/kg
镉 Cadmium (Cd)	N.D.	N.D.	2 mg/kg	100 mg/kg
汞 Mercury (Hg)	N.D.	N.D.	2 mg/kg	1000 mg/kg
六价铬 Hexavalent Chromium (Cr(VI))	N.D.▼	N.D.▼	0.10 μg/cm^2(LOQ)	1000 mg/kg

测试样品/部位描述 Tested Sample/Part Description

(1) 带有银色镀层的金属 Metal with silvery plating
(2) 银色镀层 Silvery plating

备注: **对于检测铅，镉，汞之样品已完全溶解。**
-N.D. = 未检出 (小于方法检出限或定量限)
-mg/kg = ppm = 百万分之一
-LOQ = 定量限，六价铬的定量限为 0.10 μg/cm^2
-▼六价铬浓度小于 0.10 μg/cm^2，样品未检出六价铬。

Remark: **The sample(s) had been dissolved totally tested for Lead, Cadmium, Mercury.**
-MDL = Method Detection Limit
-N.D. = Not Detected (<MDL or LOQ)
-mg/kg = ppm = parts per million
-LOQ = Limit of Quantification, The LOQ of Hexavalent chromium is 0.10 μg/cm^2
-▼The sample is negative for Cr(VI) – The Cr(VI) concentration is below 0.10 μg/cm^2. The coating is considered a non-Cr(VI) based coating.

检测报告
Test Report

检测流程 Test Process

1. 铅 Lead(Pb), 镉 Cadmium(Cd)

(1) IEC 62321-5:2013 Ed.1.0

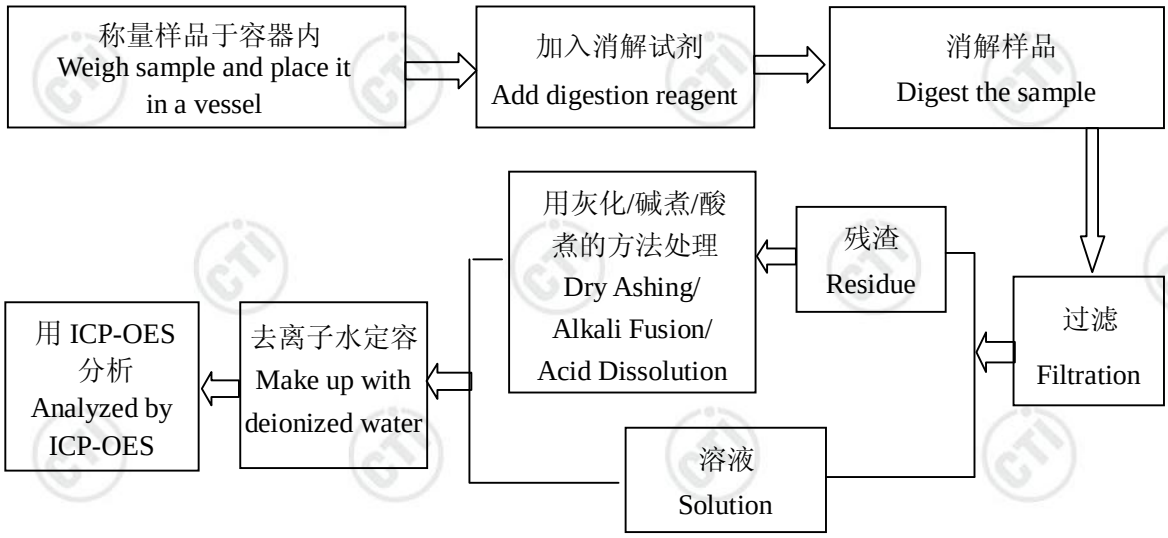

(2) 参考 IEC 62321-5:2013 Ed.1.0
Refer to IEC 62321-5:2013 Ed.1.0

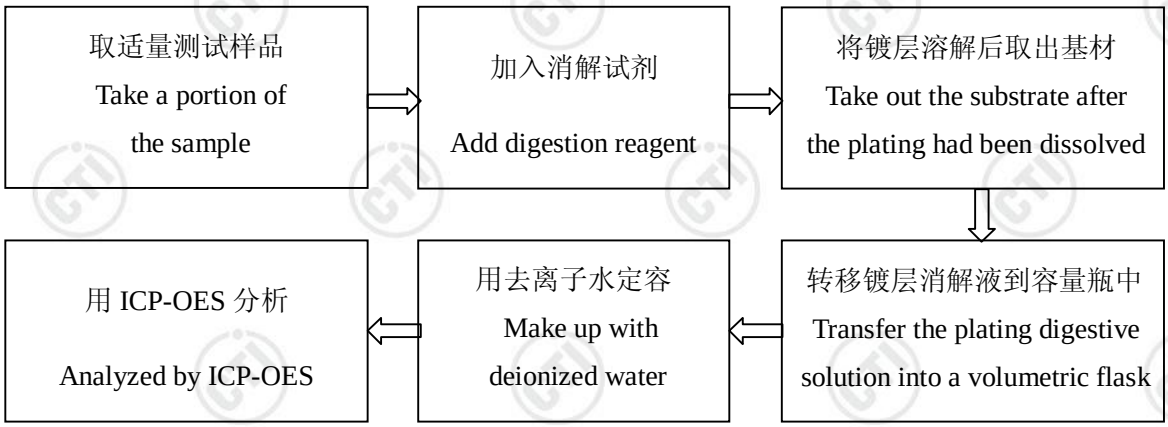

检测报告
Test Report

2. 汞 Mercury(Hg)

(1) IEC 62321-4:2013 Ed.1.0

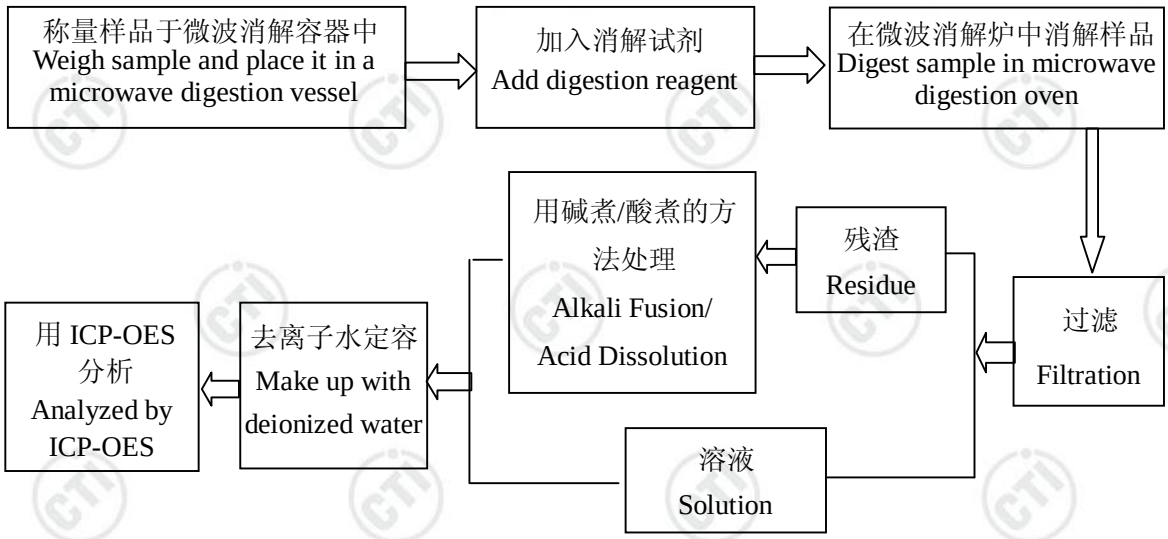

(2) 参考 IEC 62321-4:2013 Ed.1.0
Refer to IEC 62321-4:2013 Ed.1.0

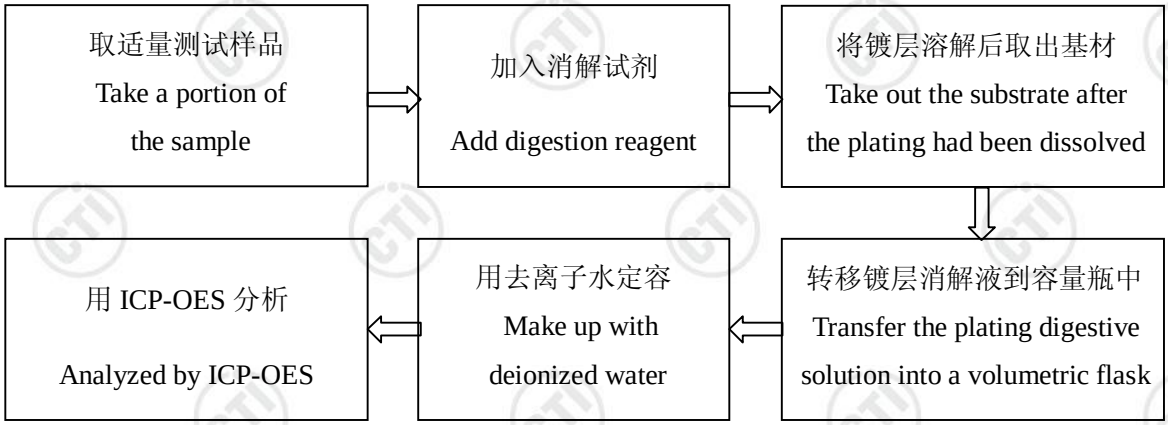

检测报告
Test Report

3. 六价铬 Hexavalent Chromium (Cr(VI))

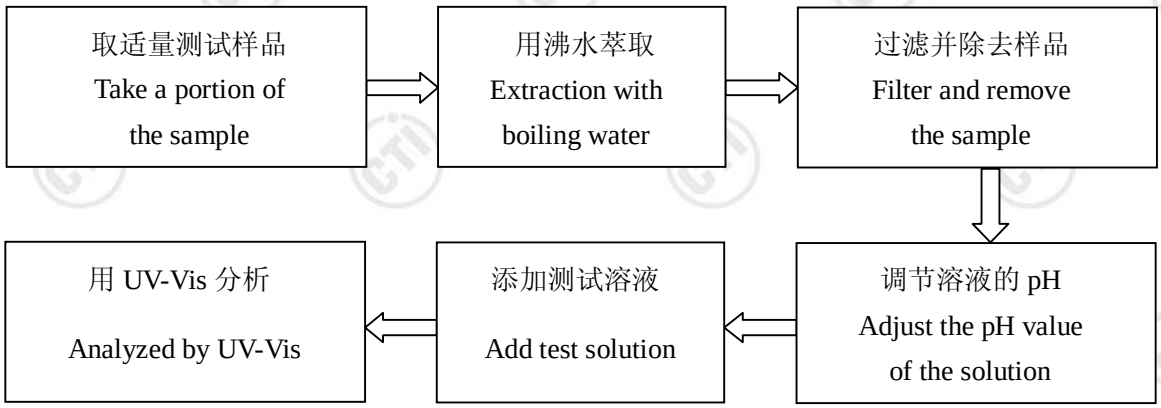

检测报告
Test Report

样品图片

Photo(s) of the sample(s)

(1)

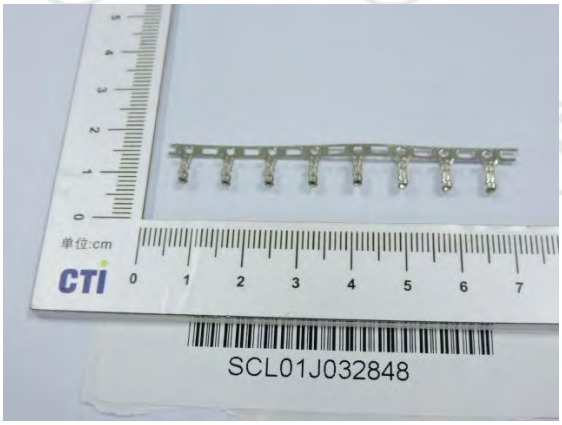

(2)

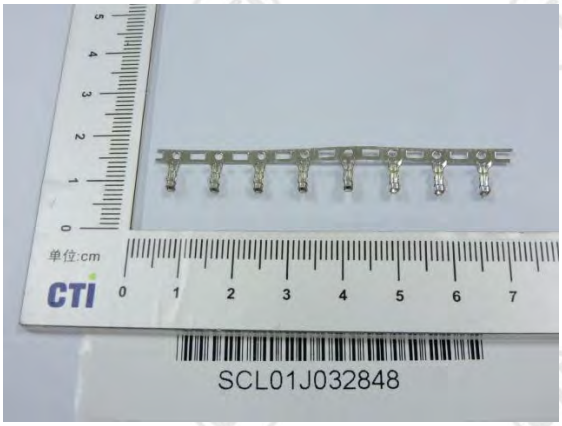

*** 报告结束 ***

*** End of Report ***

检测报告无批准人签字及加盖公司报告章无效，本报告检测结果仅对受测样品负责。未经 CTI 书面同意，不得部分复制本报告。

The test report is effective only with both signature and specialized stamp. The result(s) shown in this report refer only to the sample(s) tested. Without written approval of CTI, this report can’t be reproduced except in full.

检测报告
Test Report

报告编号 ECL03I006336003E
Report No. ECL03I006336003E

申请单位 浙江联和电子有限公司
Applicant ZHEJIANG LIANHE ELECTRONICS CO,.LTD
地 址 浙江省乐清市石帆街道后屿村
Address HOUYU VILLAGE SHIFAN TOWN YUEQING CITY ZHEJIANG PROVINCE

以下测试之样品及样品信息由申请者提供并确认
The following sample(s) and sample information was/were submitted and identified by/on the behalf of the client

样品名称	金属针和端子
Sample Name	Metal wire and terminal
材料名称	黄铜、磷铜、镍、亮锡、雾锡、金
Material	BRASS、PHOS BRONZE、NICLEL、TIN、TIN-ARGON、GOLD
样品接收日期	2016.12.19
Sample Received Date	Dec. 19, 2016
样品检测日期	2016.12.19-2016.12.27
Testing Period	Dec. 19, 2016 to Dec. 27, 2016
检测要求	根据客户要求，参照法规(EC) No 1907/2006(REACH)，对所提交样品中 66 种高关注物质(SVHC)进行筛选测试。
Test Requested	As specified by client, to screen the 66 substances of very high concern (SVHC) under Regulation(EC) No 1907/2006 of REACH in the submitted sample(s).
检测依据/检测结果	请参见下页。
Test Method/Test Result(s)	Please refer to the following page(s).
摘要	根据分析结果，所提交样品中 66 种 SVHC 浓度均小于 0.1%(w/w)。
Summary	According to the analytical results, concentrations of 66 SVHC substances are all less than 0.1%(w/w) in the submitted sample(s).

主 检 Tested by 潘希西 审 核 Reviewed by 郭世荣

批 准 Approved by 陈沙 日 期 Date 2016.12.27

陈沙
授权签字人 Approved Signatory

宁波市华测检测技术有限公司 检验检测专用章 CENTRE TESTING INTERNATIONAL (NINGBO) CO.,LTD.

No. R138205881

宁波高新区菁华路 76 号厂区东首第一、二层
Centre Testing International (Ningbo) Co.,Ltd. 1-2F, Eastern Factory, No.76, Jinghua Road, High-Tech Zone, Ningbo, Zhejiang, China

检测报告
Test Report

检测结果 Test Result(s)

批次 Batch	序号 No.	物质名称 Substance Name(s)	CAS 号 CAS No.	EC 号 EC No.	浓度 Concentration (%)	报告检出限 Report Limit
I	1	二氯化钴 Cobalt dichloride*	7646-79-9	231-589-4	N.D.	0.01%
I	2	五氧化二砷 Diarsenic pentaoxide*	1303-28-2	215-116-9	N.D.	0.01%
I	3	三氧化二砷 Diarsenic trioxide*	1327-53-3	215-481-4	N.D.	0.01%
I	4	重铬酸钠 Sodium dichromate*	7789-12-0 / 10588-01-9	234-190-3	N.D.	0.01%
I	5	砷酸氢铅 Lead hydrogen arsenate*	7784-40-9	232-064-2	N.D.	0.01%
I	6	三乙基砷酸酯 Triethyl arsenate*	15606-95-8	427-700-2	N.D.	0.01%
II	7	②铬酸铅 Lead chromate	7758-97-6	231-846-0	N.D.	0.05%
II	8	②钼铬红(C.I.颜料红 104) Lead chromate molybdate sulphate red (C.I. Pigment Red 104)***	12656-85-8	235-759-9	N.D.	0.05%
II	9	②铅铬黄(C.I.颜料黄 34) Lead sulfochromate yellow(C.I. Pigment Yellow 34)***	1344-37-2	215-693-7	N.D.	0.05%
III	10	③硼酸 Boric acid	10043-35-3 11113-50-1	233-139-2 234-343-4	N.D.	0.01%
III	11	③四硼酸钠，无水 Disodium tetraborate, anhydrous*****	1330-43-4 12179-04-3 1303-96-4	215-540-4	N.D.	0.01%
III	12	③四硼酸钠，水合物 Tetraboron disodium heptaoxide, hydrate*****	12267-73-1	235-541-3	N.D.	0.01%
III	13	铬酸钠 Sodium chromate*	7775-11-3	231-889-5	N.D.	0.01%
III	14	铬酸钾 Potassium chromate*	7789-00-6	232-140-5	N.D.	0.01%
III	15	重铬酸铵 Ammonium dichromate*	7789-09-5	232-143-1	N.D.	0.01%
III	16	重铬酸钾 Potassium dichromate*	7778-50-9	231-906-6	N.D.	0.01%
IV	17	硫酸钴 Cobalt(Ⅱ) sulphate*	10124-43-3	233-334-2	N.D.	0.01%
IV	18	硝酸钴 Cobalt(Ⅱ) dinitrate*	10141-05-6	233-402-1	N.D.	0.01%
IV	19	碳酸钴 Cobalt(Ⅱ) carbonate*	513-79-1	208-169-4	N.D.	0.01%
IV	20	醋酸钴 Cobalt(Ⅱ) diacetate*	71-48-7	200-755-8	N.D.	0.01%
IV	21	三氧化铬Chromium trioxide*	1333-82-0	215-607-8	N.D.	0.01%

检测报告
Test Report

批次 Batch	序号 No.	物质名称 Substance Name(s)	CAS 号 CAS No.	EC 号 EC No.	浓度 Concentration (%)	报告检出限 Report Limit
IV	22	①从三氧化铬产生的酸类以及它们的齐聚物：铬酸、重铬酸、铬酸和重铬酸的齐聚物Acids generated from chromium trioxide and their oligomers: Chromic acid, Dichromic acid, Oligomers of chromic acid and dichromic acid*	7738-94-5 13530-68-2	231-801-5 236-881-5	N.D.	0.01%
V	23	铬酸锶 Strontium chromate*	7789-06-2	232-142-6	N.D.	0.01%
VI	24	铬酸铬 Dichromium tris(chromate)*	24613-89-6	246-356-2	N.D.	0.01%
VI	25	氢氧化铬酸锌钾 Potassium hydroxyoctaoxodizincatedichromate*	11103-86-9	234-329-8	N.D.	0.01%
VI	26	氢氧化铬酸锌 Pentazinc chromate octahydroxide*	49663-84-5	256-418-0	N.D.	0.01%
VI	27	②硅酸铝耐火陶瓷纤维 Aluminosilicate Refractory Ceramic Fibres (RCF) **	-	-	N.D.	0.05%
VI	28	②氧化锆硅酸铝耐火陶瓷纤维 Zirconia Aluminosilicate Refractory Ceramic Fibres (Zr-RCF) **	-	-	N.D.	0.05%
VI	29	砷酸 Arsenic acid*	7778-39-4	231-901-9	N.D.	0.01%
VI	30	砷酸钙 Calcium arsenate*	7778-44-1	231-904-5	N.D.	0.01%
VI	31	砷酸铅 Trilead diarsenate*	3687-31-8	222-979-5	N.D.	0.01%
VI	32	叠氮化铅 Lead diazide*	13424-46-9	236-542-1	N.D.	0.01%
VI	33	2,4,6-三硝基间苯二酚铅 (别名：收敛酸铅) Lead 2,4,6-trinitro-m-phenylene dioxide (Lead styphnate)*	15245-44-0	239-290-0	N.D.	0.01%
VI	34	苦味酸铅 Lead dipicrate*	6477-64-1	229-335-2	N.D.	0.01%
VII	35	③三氧化二硼 Diboron trioxide	1303-86-2	215-125-8	N.D.	0.01%
VII	36	甲基磺酸铅 Lead(II) bis methanesulfonate*	17570-76-2	401-750-5	N.D.	0.01%
VIII	37	氧化铅与硫酸铅的复合物 Pentalead tetraoxide sulphate*	12065-90-6	235-067-7	N.D.	0.01%

检测报告
Test Report

批次 Batch	序号 No.	物质名称 Substance Name(s)	CAS 号 CAS No.	EC 号 EC No.	浓度 Concentration (%)	报告检出限 Report Limit
VIII	38	双(十八酸基)二氧代三铅 Dioxobis(stearato)trilead*	12578-12-0	235-702-8	N.D.	0.01%
VIII	39	硝酸铅 Lead dinitrate*	10099-74-8	233-245-9	N.D.	0.01%
VIII	40	三碱式硫酸铅 Tetralead trioxide sulphate*	12202-17-4	235-380-9	N.D.	0.01%
VIII	41	氧化铅 Lead monoxide (lead oxide)*	1317-36-8	215-267-0	N.D.	0.01%
VIII	42	钛酸铅 Lead titanium trioxide*	12060-00-3	235-038-9	N.D.	0.01%
VIII	43	碱式乙酸铅 Acetic acid, lead salt, basic*	51404-69-4	257-175-3	N.D.	0.01%
VIII	44	颜料黄 41 Pyrochlore, antimony lead yellow*	8012-00-8	232-382-1	N.D.	0.01%
VIII	45	四乙基铅 Tetraethyllead*	78-00-2	201-075-4	N.D.	0.01%
VIII	46	二盐基邻苯二甲酸铅 [Phthalato(2-)]dioxotrilead*	69011-06-9	273-688-5	N.D.	0.01%
VIII	47	氨基氰铅盐 Lead cyanamidate*	20837-86-9	244-073-9	N.D.	0.01%
VIII	48	掺杂铅的硅酸钡 Silicic acid ($H_2Si_2O_5$), barium salt (1:1), lead-doped*	68784-75-8	272-271-5	N.D.	0.01%
VIII	49	磷酸氧化铅 Trilead dioxide phosphonate*	12141-20-7	235-252-2	N.D.	0.01%
VIII	50	钛酸铅锆 Lead titanium zirconium oxide*	12626-81-2	235-727-4	N.D.	0.01%
VIII	51	碱式碳酸铅 Trilead bis(carbonate)dihydroxide*	1319-46-6	215-290-6	N.D.	0.01%
VIII	52	C16-18-脂肪酸铅盐 Fatty acids, C16-18, lead salts*	91031-62-8	292-966-7	N.D.	0.01%
VIII	53	四氧化三铅 Orange lead (lead tetroxide)*	1314-41-6	215-235-6	N.D.	0.01%
VIII	54	二碱式亚硫酸铅(II) Sulfurous acid, lead salt, dibasic*	62229-08-7	263-467-1	N.D.	0.01%
VIII	55	碱式硫酸铅 Lead oxide sulfate*	12036-76-9	234-853-7	N.D.	0.01%
VIII	56	四氟硼酸铅 Lead bis(tetrafluoroborate)*	13814-96-5	237-486-0	N.D.	0.01%

检测报告
Test Report

批次 Batch	序号 No.	物质名称 Substance Name(s)	CAS 号 CAS No.	EC 号 EC No.	浓度 Concentration (%)	报告检出限 Report Limit
VIII	57	硅酸铅 Silicic acid, lead salt*	11120-22-2	234-363-3	N.D.	0.01%
IX	58	镉 Cadmium	7440-43-9	231-152-8	N.D.	0.01%
IX	59	氧化镉 Cadmium oxide*	1306-19-0	215-146-2	N.D.	0.01%
X	60	硫化镉 Cadmium sulphide*	1306-23-6	215-147-8	N.D.	0.01%
X	61	醋酸铅(Ⅱ) Lead di(acetate)*	301-04-2	206-104-4	N.D.	0.01%
XI	62	氯化镉 Cadmium chloride *	10108-64-2	233-296-7	N.D.	0.01%
XI	63	③过硼酸钠，水合物；过硼酸钠盐 Sodium perborate; perboric acid, sodium salt *****	-	239-172-9, 234-390-0	N.D.	0.01%
XI	64	③过硼酸钠，无水 Sodium peroxometaborate *****	7632-04-4	231-556-4	N.D.	0.01%
XII	65	氟化镉* Cadmium fluoride*	7790-79-6	232-222-0	N.D.	0.01%
XII	66	硫酸镉* Cadmium sulphate*	10124-36-4; 31119-53-6	233-331-6	N.D.	0.01%

检测依据 Test Method:

参考 US EPA3052:1996, US EPA 3050B:1996, US EPA3060A:1996, BS EN14582:2007 进行样品预处理。

Refer to US EPA3052:1996, US EPA 3050B:1996, US EPA 3060A:1996, BS EN 14582:2007 for sample pretreatment.

采用 ICP-OES, UV-Vis 及 IC 分析。

Analyzed by ICP-OES, UV-Vis and IC.

测试样品/部位描述 混测，七种，黄铜、磷铜、黄铜镍底镀锡、黄铜镍底镀金、磷铜镀锡、磷铜镍底镀锡、磷铜镍底镀金

Tested Sample/Part Description Mixed test, seven kinds, brass, phos bronze, brass nickel plated tin, brass nickel plated gold, phos bronze plated tin, phos bronze nickel plated tin, phos bronze nickel plated gold

检测报告
Test Report

备注 Remark:

1. w/w % = 重量百分比 weight by weight; 0.1% = 1000mg/kg = 1000ppm
2. N.D. = 未检出 Not Detected (小于报告检出限<report limit)
3. *: 该物质的浓度值是由物质中的特征元素测试结果换算而来。Concentration value of the substance by the conversion from the test results of certain elements.
4. **: 在化学物质及其混合物的分类，标记与包装法规，即 CLP 法规(法规(EC)No 1272/2008)的附录 VI 中，索引号 650-017-00-8 适用于所有的耐火陶瓷纤维材料。All refractory ceramic fibres are covered by index number 650-017-00-8 in Annex VI of the Regulation on Classification, Labeling and Packaging of chemical substances and mixtures, the so called CLP Regulation (Regulation (EC) No 1272/2008).
5. ***: C.I.:颜料索引号 Colour Index
6. *****: 四硼酸钠，无水和四硼酸钠，水合物的浓度均由四硼酸钠浓度表示，没有考虑结晶水。
   过硼酸钠，水合物；过硼酸钠盐和过硼酸钠，无水的浓度均由过硼酸钠浓度表示，没有考虑结晶水。
   Concentration value of Disodium tetraborate, anhydrous and Tetraboron disodium heptaoxide, hydrate is evaluated by Disodium tetraborate, with no consider of the hydrate.
   Concentration value of Sodium perborate; perboric acid, sodium salt; Sodium peroxometaborate is evaluated by Sodium perborate, with no consider of the hydrate.
7. ①: 由于这些物质是 UVCB 物质(未知成分或可变成分的，复杂反应物或生物材料的物质)，由各种不同的成分组成，所以这些物质的测试结果是由选定的具有代表性的物质的主要组成成分的测试结果换算而来的。In view of the substances are established as UVCB substances (substances of unknown or variable composition, complex reaction products or biological materials) consisting of different and variable constituents, the test results are calculated based on the main constituents of the representative compounds for substances.
8. ②: 由于此物质含有多种物质，测试结果是基于此物质中最具有代表性的主要组成化合物的含量，其主要造成化合物的测试结果是基于特征元素的浓度换算而来。
   In view of the substance contain variable substances, the test results are calculated based on main constituents of the representative compounds for the substances, and the test results of the representative compounds are calculated based on the result of specified heavy metal elements.
9. ③: 硼酸；四硼酸钠，无水；四硼酸钠，水合物；三氧化二硼；过硼酸钠，水合物；过硼酸钠盐和过硼酸钠，无水的浓度值是由物质中的特征元素测试结果换算而来，并用适当溶剂萃取进行确认，同时建议客户检查化学配方表进一步确认是否含有上述化合物。Concentration value of Boric acid; Disodium tetraborate, anhydrous; Tetraboron disodium heptaoxide, hydrate; Diboron trioxide; Sodium perborate; perboric acid, sodium salt; Sodium peroxometaborate is calculated by the conversion from the test results of certain elements and confirmed by appropriate solvent extraction, meanwhile the book of materials is suggested to be checked for further confirmation.
10. 根据客户要求，对样品进行混合测试，测试结果不代表混合测试中任何一种单一材质的含量。As specified by client, the test was conducted by mixing several samples together.The result(s) shown on this report may be different from the content of any homogeneous material.

注释 Note:

本报告中的数据结果供科研、教学、企业内部质量控制、企业产品研发等目的用。The testing data and result(s) in this report is(are) just for scientific research, education, internal quality control and product development etc.

检测报告
Test Report

附加信息 Appendix:

1. 根据欧盟 REACH 法规（编号 1907/2006）第 33 条款之规定，物品类产品如果含有候选列表上的高度关注物质且在物品中的质量百分比超过 0.1%时，物品供应方需履行相关信息传递义务:
   Any supplier of an article containing a substance that is included in the Candidate List in a concentration above 0.1 % weight by weight (w/w) has the duty to communicate information in accordance with Article 33 of European Union regulation concerning the Registration, Evaluation, Authorization and Restriction of Chemicals (REACH).
   1) 物品供应方应提供给接收方关于产品的足够信息以确保物品的安全使用，至少需提供所含高度关注物质的名称。Any supplier shall provide the recipient of the article with sufficient information to allow safe use of the article including, as a minimum, the name of that substance.
   2) 应消费者请求，物品供应方应在 45 天内免费提供关于产品的足够信息以确保物品的安全使用，至少需提供所含高度关注物质的名称。On request by a consumer any supplier shall provide the consumer with sufficient information to allow safe use of the article including, as a minimum, the name of that substance within 45 days of receipt of the request, free of charge.
2. 根据欧盟 REACH 法规（编号 1907/2006）第 31 条款及附件 2 之规定，提供高度关注物质的物质类产品供应方，应免费提供接收方该物质的安全数据表。The supplier of a substance that is included in the Candidate List on their own shall provide the recipient of the substance with a safety data sheet for free compiled in accordance with Article 3 and Annex II of REACH.
3. 根据欧盟 REACH 法规（编号 1907/2006）第 31、32 条款及附件 2 之规定，提供含有高度关注物质的混合物产品供应方需传递相关信息:
   The supplier of a mixture that containing a substance that is included in the Candidate List shall exchange information in accordance with Article 31, Article 32, and Annex II of REACH.
   1) 如果混合物产品按照 1999/45/EC 被判定为危险品时，供应方应免费提供产品的安全数据表。Any supplier shall provide the recipient of the mixture with a safety data sheet for free where a preparation meets the criteria for classification as dangerous in accordance with Directives 1999/45/EC.
   2) 如果混合物产品按照 1999/45/EC 判定并非危险品，但是任一高度关注物质在非气体混合物中质量分数超过 0.1%或在气体混合物中体积分数超过 0.2%，供应方也应免费提供产品的安全数据表。Any supplier shall provide the recipient of the mixture with a safety data sheet for free where a preparation does not meet the criteria for classification as dangerous in accordance with Directive 1999/45/EC, but contains any substance that is included in the Candidate List in an individual concentration of ≥ 0.1 % by weight for non-gaseous mixtures or ≥ 0.2 % by volume for gaseous mixtures.

检测报告
Test Report

样品图片

Photo(s) of the sample(s)

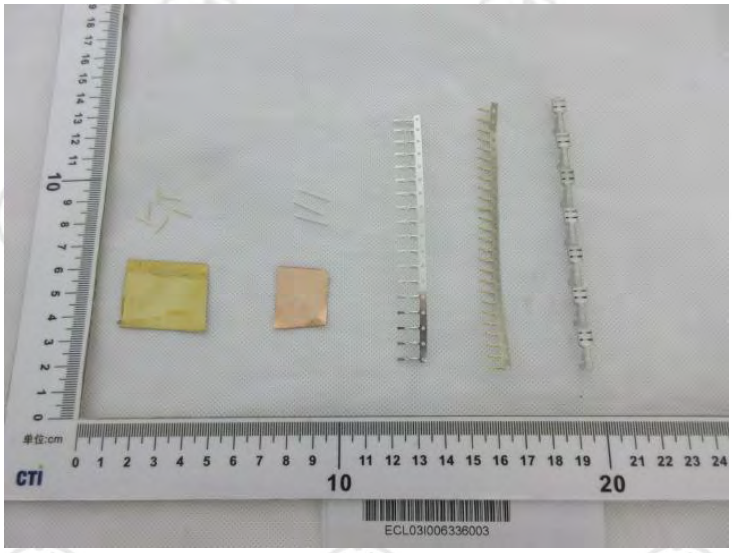

*** 报告结束 ***
*** End of Report ***

检测报告无批准人签字及加盖公司报告章无效，本报告检测结果仅对受测样品负责。未经CTI书面同意，不得部分复制本报告。
The test report is effective only with both signature and specialized stamp. The result(s) shown in this report refer only to the sample(s) tested. Without written approval of CTI, this report can’t be reproduced except in full.

物質安全資料表

一、物品與廠商資料

物品名稱：CCP PBT 複合材料
其他名稱：1000, 2000,3000,4000,5000,6000,7000,8000系列
建議用途及限制使用：
製造商或供應商名稱、地址及電話：長春人造樹酯廠股份有限公司/台北市松江路301號7樓 /(02)25001800
緊急聯絡電話/傳真電話：(07)3711301/(07)3710819

二、危害辨識資料

物品危害分類：NA
標示內容：NA 象徵符號： 警 示 語： 危害警告訊息：無 危害防範措拖：無
其他危害：

三、成分辨識資料

混合物	
化學性質	
危害物質成分之中英文名稱	濃度或濃度範圍（成分百分比）
Polybutylene Terephthalate	40～99
Glass Fiber	10～50
Additives	0.4～40

四、急救措施

不同暴露途徑之急救方法： • 吸入： 當吸入加熱所產生之氣體時，應立即移至通風良好之處，如有必要則送醫治療。 • 皮膚接觸： 若被高溫的液體產物濺到皮膚，應立即沖水，冷卻後變硬之固體不可從傷處任意移走，經一段時間後會自行脫落，若情況危急應送醫治療。 • 眼睛接觸： 若被高溫的液體產物濺到眼睛，立即送醫並以大量的冷水沖洗。 • 食入： 無
最重要症狀及危害效應：無
對急救人員之防護：無
對醫師之提示：無

五、滅火措施

適用滅火劑：水、乾粉、泡沫、二氧化碳
滅火時可能遭遇之特殊危害：無
特殊滅火程序：依B級火災處理
消防人員之特殊防護設備：穿著個人防護裝備

六、洩漏處理方法

個人應注意事項：處理時應穿著個人防護裝備
環境注意事項：包裝袋洩露會造成環境污染

清理方法：直接以掃帚清理作爲回收料使用

七、安全處置與儲存方法

處置：作業時配戴防護手套,及防塵口罩,避免粉塵由口鼻吸入
儲存：應存放於乾燥及通風良好之處

八、暴露預防措施

工程控制：ND			
控制參數			
八小時日時量平均 容許濃度 TWA	短時間時量平均 容許濃度 STEL	最高容許 濃度 CEILING	生物指標
依無毒粉塵標準 8HR 容許量 10mg/m3			ND
個人防護設備： • 呼吸防護：防粉塵用防護面罩 • 手部防護：隔熱手套 • 眼睛防護：安全防護鏡 • 皮膚及身體防護：長袖工作服及安全鞋			
衛生措施：工作後應徹底洗淨雙手			

九、物理及化學性質

外觀： 固體	氣味：無臭
嗅覺閾值：	熔點：225℃
Ph值：ND	沸點/沸點範圍：>350
易燃性(固體,氣體)：	閃火點：>355 ℃
分解溫度：>300℃	測試方法：
自燃溫度：>420℃	爆炸界限：無可獲得的數據
蒸氣壓：ND	蒸氣密度：ND
密度： 1.3-1.7	溶解度： 不溶於水
辛醇／水分配係數(log Kow)：ND	揮發速率：ND

十、安定性及反應性

安定性：安定
特殊狀況下可能之危害反應： 粉塵危害
應避免之狀況：加熱至300℃以上
應避免之物質：強鹼,強氧化劑
危害分解物： ND

十一、毒性資料

暴露途徑：無
症狀：無
急毒性：無
慢毒性或長期毒性：無

十二、生態資料

生態毒性：NA
持久性及降解性：持久性

生物蓄積性：NA
土壤中之流動性：NA
其他不良效應：NA

十三、廢棄處置方法

廢棄處置方法：PBT複合材料料頭外售,交由回收料廠商粉碎回收

十四、運送資料

聯合國編號： Not regulated
聯合國運輸名稱：Not regulated
運輸危害分類：Not regulated
包裝類別：SEA BULK,太空包,紙袋
海洋污染物（是／否）：否
特殊運送方法及注意事項：運送過程保持貨品乾燥

十五、法規資料

適用法規：Not regulated

十六、其他資料

參考文獻		
製表單位	名稱：長春人造樹脂廠股份有限公司高雄廠	
	地址/電話：高雄縣仁武鄉仁武村工業一路14號/(07)3711301	
製表人	職稱：副課長	姓名：吳福利
製表日期	2008/09/16 04:35:39 PM	修改日期 ：2008/09/16 04:35:39 PM
備註		

物质安全数据表 MSDS

1. **化学产品及公司名称**

产　　品： 色母粒

公司名称： 精亮科技（苏州）有限公司

地　　址： 中国江苏省苏州市工业园区金浦路 8 号

电　　话： 0512-88852981

传　　真： 0512-88852980

2. **成分**

钛白粉混合改性料，无危险物质。

3. **危险性说明**

没有特别的危害。不过热。

4. **紧急救护措施**

皮肤接触： 接触冷材料,用水和肥皂清洗。皮肤碰到熔融材料应尽快用冷水冷却,寻求医护人员的帮助。

眼睛接触： 本产品是惰性固体。如眼睛接触熔融物, 立即用大量清水冲洗,寻求医疗的帮助。

吸　　入： 气体温度升高,应移至新鲜空气。长期接触,应寻求医护人员的帮助。

吞　　入： 无需治疗。

5. **消防措施**

合适的灭火介质： 水，泡沫，二氧化物。

不合适的灭火介质：

暴光危险性： 受热分解会释放有毒气体，包括可燃碳氢化合物、乙酸(刺激物)、醋酸乙烯酯。

消防队员防护设备： 使用呼吸器

6. **意外防护措施**

个人防护措施： 远离火源。地面不要有颗粒，以免路滑。

环境保护措施： 没有特别的危害。

清洁的方法： 在合适的容器回收或处置材料。按照当地规定处理。

7. **处理和贮存**

处理： 建议处理热材料区域应提供良好的通风，可用防护设备。

贮存：没有特殊储存及运输的要求。储存在干燥的仓库。

8. **暴光控制/个人防护措施**

技术保护措施：一般应提供良好的排气通风设备。

暴光控制： 惰性尘粒，最高容许浓度 TLV 10mg/m3 总重量。

呼吸防护： 保证足够的通风。

手部防护： 使用防护手套。

眼睛防护： 使用安全防护眼镜。

皮肤防护： 穿工作服，保护皮肤不接触熔化的材料。

9. **物理及化学性质**

序号	项目	指标	数值	备注
1	颜料含量	100%	±2	
2	熔指		–	
3	灰分	100%	±2	
4	水分	500ppm	-	
5	色差值（△E）	-	±0.2	

10. **稳定性和反应性**

热分解： 温度高于 200 度有树脂降解的风险

应避免的条件： 静电放电。

应避免的材料： 避免接触氟和强氧化剂。

危险性的分解产物： 受热可能产生可燃的低分子量烃气体。燃烧会释放有毒气体，包括醋酸、醋酸乙烯。

11. **毒性资料**

没有数据显示。

12. **生态信息**

不能生物降解。

13. **处理注意事项**

本产品在当地法规允许的情况下焚烧或填埋处理。材料可以利用合适的技术回收。

14. **运输规程**

因为本产品是惰性物质，所以在正常条件下输送不会产生空气污染。

15. **监管信息**

没有标签规定。

16. **其他**

这份物质安全数据表是补充，而不是取代我们的技术数据表。这份资料由我们的产品使用指南提供，符合我们所知道的知识。但是，精亮科技（苏州）有限公司不能保证它的准确性和完整性，所有的化学品都存在不可预见的危险性，须小心使用。

我们不能保证以上提到的危险性是目前仅有的危险性。使用这个产品的最后选择是使用者要有专业的责任心。

材料安全数据表(MSDS)

第 1 部分　产品品名与制造商信息
Part 1　Description of Goods and Producer Information

产品名称：　锡磷青铜带
Description of goods: Phosphor bronze strip

牌号：　C5111R 、C5102R、C5191R、C5210R、C5240R、C51100、C51000、C51900、C52100、C52400、QSn6.5-0.1、QSn8-0.3
Type No: C5111R 、C5102R、C5191R、C5210R、C5240R、C51100、C51000、C51900、C52100、C52400、QSn6.5-0.1、QSn8-0.3

生产商：　安徽鑫科铜业有限公司
Producer: Anhui Xinke Copper Co., Ltd.

电话：0086-553-5313737 , 5313583
Tel:　0086-553-5313737, 5313583

第 2 部分　组成成份
Part 2　Composition

Type No. 牌号	Chemical composition: %, minimum 化 学 成 分: % , 不大于						
	Pb	Fe	Sn	P	Zn	Cu	Cu+ Sn+ P
C5111R、C51100	0.02	0.1	3.5~4.5	0.03~0.35	0.2	Balance	≥99.5
C5102R、C51000	0.05	0.1	4.5~5.5	0.03~0.35	0.2	Balance	≥99.5
C5191R、C51900、QSn6.5-0.1	0.05	0.1	5.5~7.0	0.03~0.35	0.2	Balance	≥99.5
C5210R、C52100、QSn8-0.3	0.05	0.1	7.0~9.0	0.03~0.35	0.2	Balance	≥99.5
C5240R、C52400	0.02	0.1	9.0~11.0	0.03~0.35	0.2	Balance	≥99.5

第 3 部分　危害信息
Part 3　Hazards Identification

吸入金属粉尘:造成呼吸困难。
To inhale the metal powder: can cause headaches and breathing problems.
金属粉末对眼睛危害:损伤视力。
Impact on eyes from the metal powder: Eyesight could be harmed.
对皮肤的影响:划伤。
Impact on skin: Skin could be incised wound.
致癌性:无资料。

Carcinogenic: No information.

第 4 部分 急救措施
Part 4 First Aid Measures
皮肤接触：清除粉尘，用肥皂水清洗。
Skin contaminated: Remove the powder with soap-suds.
眼睛接触：立即翻开上下眼睑，用水清洗。
Eyes contaminated: Turn open eye-lids immediately, and wash them with clean water.
吸入： 转移至空气新鲜处。
Inhaled: Move to the place with fresh air.

第 5 部分 消防措施
Part 5 Fire fighting measures
可燃性：非易燃。
Combustibility: Not combustible.
爆炸性：非易爆。
Explosibility: Not explosive.

第 6 部分 泄露应急处理
Part 6. Accidental Release Measures
产品为固体，无泄漏现象。
The product is solid, no leakage phenomenon.

第 7 部分 操作和储存
Part 7 Handling and Storage
操作：注意被割伤划伤。
Handling: Be careful not to being cut.
包装方法：密封包装(参照《重有色金属加工产品的包装、标志、运输和贮存》（GB8888-88）)。
Package: Hermetic package (Please refer to “Packing, marking, transporting and stocking ways of processed non-ferrous metals” (GB GB8888-88）).
储存：应包装好存放于通风良好、干燥、荫凉之场所。
Storage: Goods should be well wrapped and stored in ventilated, dry and shady places.

第 8 部分 接触控制和个人防护措施
Part 8. Exposure Controls/Personal Protection
空气中铜和锡最高容许浓度：CU：0.1MG/M^3 SN： 2MG/ M^3。
Maximum thickness of Cu and Sn in the air: CU：0.1MG/M^3 SN： 2MG/ M^3.
监测方法：OSHA PEL 标准。
Detection methods: According to OSHA PEL Standard.
工程控制：加强通风。
Engineering control: Keep the working place ventilated.
呼吸系统防护：超过标准浓度时佩带过滤式防毒面具。
Respiratory organs protection: Must wear screen-style gas mask if the thickness is higher than the safe standard.
眼睛防护：佩戴边部带遮片的防护眼镜。
Eyes protection: Wear protective glasses with protecting side panes.
身体防护：穿戴防护工作服。

Body protection: Wear protective working clothes.
手防护： 佩戴防护手套。
Hands protection: Wear protective working gloves.
其他防护：面罩，特制的彩色眼镜。
Others: Wear protective mask, special color glasses.

第 9 部分 物理和化学特性
Part 9 Physical and chemical properties

外观：黄色或红色的金属色泽，不溶于水，无味。
Appearance: Yellowish and reddish color with metal luster, non-dissoluble in water, insipid with no smell.
熔点：1290-2260F。
Melting point: 1290-2260F.
溶解性：不溶于水。
Dis-solubility: Non-dissoluble in water.
密度：8800kg/m^3。
Density: 8800kg/m^3.
主要用途：连接器、接插端子等。
Usages: Connectors,terminals and etc.

第 10 部分 稳定性和反应活性
Part 10 Stability and reactivity

稳定性：稳定。
Stability: Stable.
禁配物：酸，氧化剂。
Substances prohibited to be with: Acid, oxidizer.
应该避免接触的条件或物质：水，高热，火，化学反应。
Substances or conditions prohibited to touch: Water, high temperature, fire, chemical reaction.

第 11 部分 毒理学信息
Part 11 Toxicological Information

急性毒性：无。
Acute toxicity: No.
亚急性和慢性毒性：无。
Sub-acute toxicity and chronic toxicity: No.
致敏性：金属过敏，皮炎，手足角质化，上呼吸道不适。
Possibility of causing irritability: Irritability against metals, dermatitis, horny-skin of hands and feet skin, feeling uncomfortable in the upper respiratory organs.
致癌性：无。
Possibility of causing cancer: No.

第 12 部分 生态学信息
Part 12. Ecological Information

Apply Europe environment-protection standard: No negative effects on environment.
执行欧洲环境标准: 对环境无不良影响。
Limit of contents of hazardous substances:
有害物质最大限量：

Item No. 序号	Chemical elements 化学成分	limit of contents 最大限量	
1	Pb 铅	＜80PPM	＜0.008%
2	Cd 镉	＜5 PPM	＜0.0005%
3	Hg 汞	＜5 PPM	＜0.0005%
4	Ba 钡	＜100 PPM	＜0.01%

第 13 部分：废弃处置
Part 13 Disposal Considerations
废弃物类别：工业固体废物。
Category of the wastes: Industrial solid wasters.
废弃处置方法：可回收再利用。
Methods of treatment: Can be reclaimed and reused.

第 14 部分 运输信息
Part 14 Transport Information
运输注意事项：防止水分接触，以防腐蚀。
Matters needing attentions in transportation: Avoid water, which can cause corrosion.

第 15 部分 法规信息
Part 14 Regulatory Information
中华人民共和国安全生产法
Production Safety Law of the People's Republic of China
中华人民共和国环境保护法
Environmental Protection Law of the People's Republic of China

第 16 部分 其他信息
Part 16 Other Information
无
NO.

乐清市远方电子电镀有限公司

物质安全资料（MSDS）

1、化学产品及企业标识：

化学产品俗名：甲基磺酸锡（**MS　TIN300G/L**）　　**$(CH_3SO_3)_2SN$**

化学产品代码：TAK05-020

企业名称：乐清市远方电子电镀有限公司

电话：（0577）62357000

传真：（0577）62359000

紧急电话：

2、配料的组分/有关数据

产品中危害成分

组成 ：	CAS 编号	含量	职业安全级别
甲基磺酸锡$(CH_3SO_3)_2SN$	53408-94-9	55%	不确定
甲基磺	75-75-2	10%	不确定
水		35%	

3、危险性说明

危险性/对健康的危害性

健康危害：本品对眼和呼吸道有刺激性。对皮肤有刺激性和致敏作用。口服刺激消化道，引起呕心、呕吐、惊厥。

环境危害：燃爆危险，本品易燃，有毒，具刺激性，具致敏性。

4、急救措施：

皮肤接触：脱去污染的衣着，用肥皂水和清水彻底冲洗皮肤。

眼睛接触：提起眼睑，用流动清水或生理盐水冲洗，就医。

呼吸吸入此化学剂：迅速脱离现场至空气新鲜处。保持呼吸道通畅，如呼吸困难，给输氧。如呼吸停止立即进行人工呼吸，就医。

食入：饮足量温水，催吐，就医。

5、消防措施：

危险特性：遇高热，明火或与氧化剂混合，经摩擦，撞击有引起燃烧爆炸的危险。在高温时，若为汞盐，强酸，碱土金属，氢氧化物及卤化物等污染后，有可能发生爆炸。

有害燃烧产物：一氧化碳 二氧化碳

灭火方法：采用水、抗溶性泡沫、二氧化碳、干粉、沙土灭火。

6、排除故障的措施：

应急处理：隔离泄漏污染区，限制出入，切断火源。建议应急处理人员带防尘面具，穿防毒服。不要直接接触泄漏物。

小量泄漏：用洁净的铲子收集于干燥、洁净、有盖的容器中。

大量泄漏：收集回收货运至废物处理厂所处置。

7、此化学剂的装运和储存

操作注意事项：密闭操作，局部排风。操作人员必须经过专门培训，严格遵守操作规程。建议操作人员佩戴自吸过滤式防尘口罩，佩戴化学安全防护眼睛，穿透气型防毒服，戴防化学品手套。远离火种、热源，工作场所严禁吸烟。使用防暴型的通风系统和设备。避免产生粉尘。避免与氧化剂、碱类接触。搬运时要轻装轻卸，防止包装及容器损坏。配备相应品种和数量的消防器材及泄漏应急处理设备。倒空的容器可能残留有害物质。

储存注意事项：储存于阴凉、通风的库房。远离火种、热源。包装密封，应与氧化剂，碱类，食用化学品分开存放，切忌混储。采用防暴型照明，通风设施。禁止使用易产生火花的机械设备和工具。储区应备有合适的材料收容泄漏物。

8、接触控制/人体防护

监测方法：

工程控制：加强通风。

呼吸系统防护：在通风不足的地方使用，佩戴自吸过滤式防酸口罩。

眼睛防护：佩戴化学安全防护眼镜。

身体防护：穿透气型防毒服。

手防护：佩戴化学品手套。

其他防护：工作现场严禁吸烟。避免长期反复接触。定期体检，注意个人清洁卫生。

9、此化学剂的物理性质和化学性质

形状：液体

颜色：淡黄色

溶水性：可溶于水

相对密度：1.55

溶点℃：-60

沸点℃：＞109

10、稳定性和可反应性

稳定性：稳定。

此化学剂需避免接触的物质：碱、氰化物和水反应材料

避免：避免高温

危害分解产物：如果温度超过 200 度热分解物流硫的氧化物和碳氧化物，该产品在室温下稳定。

11、有关此化学剂毒性的资料

请参阅第 3 章节的此化学剂的危险性和对人体的危害性。

12、有关生态的资料

生态毒性：

污染水质：不确定

13、有关排污的说明

咨询当地有关排污的法规和要求。

废物排放：按照当地有关的法规和要求排污。

14、有关运输的资料

UN 编码：NA

UN 运送名称：NA

UN 等级：NA

UN 包装：25KG

包装方法：小开口钢桶；螺纹口玻璃瓶、铁盖压口玻璃瓶、塑料瓶或金属桶（罐）外普通木箱；螺纹口玻璃瓶、塑料瓶或镀锡薄钢板桶（罐）外满底板花格箱、纤维板箱或胶合板箱。

运输注意事项：运输前应检查包装容器是否完整、密封，运输过程中要确保容器不泄漏、不倒塌、不坠落、不损坏。严禁与碱类、氧化剂、食品及食品添加剂混运。运输时运输车辆应配备相应品种和数量的消防器材及泄漏应急处理设备。运输途中应防曝晒、雨淋、防高温。

15、有关法规的资料

有关法规：化学危险物品安全管理条列(1987 年 2 月 17 日国务院发布)，化学危险物品安全管理条列实施细则（化劳发「1992」677 号），工作场所安全使用化学品规定等法规（「1996」劳动部发 423 号），针对化学危险品的安全使用、生产、储存、运输、装卸等方面均作了相应规定；常用危险化学品的分类及标志（GB13690-92）将该物质化为第 6.1 类毒害品。

有关安全的事宜：

S 24/25　此化学剂避免接触眼睛和皮肤。

16、其他有关的资料

警告：此安全数据清单中仅涉及指定化学产品的有关资料，准确、可用，但作为建议或推荐，仅供参考，不能作为产品使用的担保，此产品的使用情况取决于用户的操作使用。而且，此资料中的有关说明不适用于与现有专利所涉及的物质和用途不一致的产品。

制造（供应）商名称：乐清市远方电子电镀有限公司

地址：乐清市虹桥镇东工业区幸福东路 1002 号

电话：0577-62388000　　传真：0577-62359000

紧急联络人：方兴峰

公司盖章:

填表时间：2011 年 1 月 8 日

反馈与建议：