浙 江 联 和 电 子 有 限 公 司

ZHEJIANG LIANHE ELECTRONICS CO.,LTD.

承　认　书

SPECIFCATION FOR APPROVAL

客 户 名 称 CUSTOMER	
品 名 DESCRIPTION	FPC2.54型连接器
料 号 CUSERTOMER PART NO	F2541
日 期 DATE	

客 户 确 认（APPROVED SIGNATURES）

核准（APPROVAL）	工程（ENGINEERING）	品管（QC）
承认结果：	☐ 承认　☐ 不承认	☐ 重新送样

浙江联和电子有限公司
ZHEJIANG LIANHE ELECTRONICS CO.,LTD.
地址：浙江省乐清市乐清湾港区创新路
Address：Chuangxin Road,YueQing Bay Port Zone,Yueqing City,Zhejiang China 325600.
Tel：0577-62383668(销售)　0577-62383212(Sales)
Fax：0577-62382566
Web：lhecn.1688.com(中文) www.lhecn.net.cn(English)

目　　录

1. 封面(COVER) ……1

2. 目录(CATALOGUE)……2

3. 命名和图纸(NAMING AND DRAWING)……3-6

4. 规格书(SPECIFICATION)……7-10

5. 实验报告(TEST REPORT)……11-13

6. 认证(CERTIFICATION)……14-19

7. PBT RoHS报告(PBT RoHS REPORT) ……20-27

8. 端子RoHS报告(TERMINAL RoHS REPORT) ……28-33

9. LCP RoHS报告(LCP RoHS REPORT) ……/

10. MSDS ……34-38

11. 反馈与建议(FEEDBACK AND SUGGESTIONS)……39

核准（APPROVAL）	确认（CHECK）	制作（PREPARE）

针座料号命名规则

Wafer Part No. Naming Rules

A 2501 - DH WV B 02 X2 - N* - C* - ** - ** - * - ** - ** - **

A:Wire to Board Connectors
F:FFC/FPC Connectors
I:IDC

系列号 Series Number

特征类别(默认空) Feature Category:
- DH=防呆柱+高背型
- H=高背型 High box type
- D=固定防呆柱 Fixed

产品类别 Product Category:
- WV=直针座 Straight Angle
- WR=弯针座 Right Angle
- SV=立贴式 V-SMT
- SR=卧贴式 R-SMT

同类别多型号序号(默认空)
Same Series Different Type: B～ZZ

单列极数 The Pin Number of Single Row: 01～**

多列极数 The Pin Number of Several Row: X2～X*(无则空)

N为标准缺针,*为非标缺针序号(例N1.2.5)(无则空)

C为插针样式不同(除打点、缺针外)*为序号(无则空)

打点样式
Point Style:K为打点,K2.4表示在第2枚,第4枚针上打点.默认打点无数字标注(无则空)

接触件材料 Contact Material:
- P=磷青铜 Phos.Bronze
- B=黄铜 Brass

表面处理 Surface Processing:
- 0=素材酸洗 None
- 1=镀镍 Nickel Plating
- 2=镀亮锡 Tin Plating
- 3=镀镍氩光锡 Matt Tin-Nickel Plating
- 4=镀铅锡 Tin-Lead Plating
- 5=镀铜锡 Tin-Cu Plating
- 6=镀镍银 Silver-Nickel Plating
- 7=镀镍金 Gold-Nickel Plating
- 8=镀镍局部金 Half Gold-Nickel Plating
- 9=镀亮锡局部金 Half Gold-Tin Plating
- 10=镀镍亮锡 Tin-Nickel Plating

默认B10可为空(A5001默认B3)

壳体材料 Housing Material:
- 1=PA66
- 2=G5=PA66增强
- 3=G15=PA66G15
- 4=G20=PA66G20
- 5=G30=PA66G30
- 6=PBT
- 7=PPO
- 8=LCP
- 9=U=PA66-UL

壳体材料特性 Housing Material Specialty:
- V2 UL阻燃等级标准(默认不注明)
- V0 UL阻燃等级标准
- Z=灼热丝是按照(IEC60695/GB/T5169)标准,符合GWIT750°C,GWFI960°C

壳体颜色 Housing Color:
- OR=橙色 Orange
- P=粉色 Pink
- R=红色 Red
- VI=紫色 Violet
- Y=黄色 Yellow
- GY=灰色 Gray
- BK=黑色 Black
- G=绿色 Green
- BL=蓝色 Blue
- BR=棕色 Brown
- TR=透明白 Transparent
- W=白色 White
- EC=米色 ECRU
- TG=透明绿 Transparent Green

壳体材料3/4/5/8默认米色
壳体材料7默认黑色
壳体材料1/2/6/9默认白色
(默认可为空)

客户专用代码
Customer Special Code:表示和常规件不同,用来代表某个客户

备注:*部分内容只在产品标签中体现

FPC2.54型连接器承认图面

REV	DESCRIPTION	DATE
A/0	原 始 版 本	E
A/1	修 订 版 本	

安装尺寸Mounting Measurement

立式 Straight Angle(V-Type)

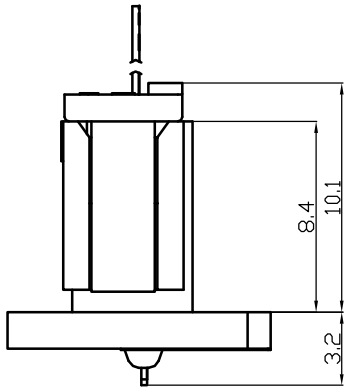

卧式 Right Angle(R-Type)

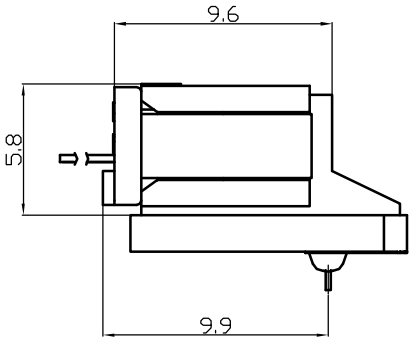

引脚部尺寸 Lead section dimensions of FPC

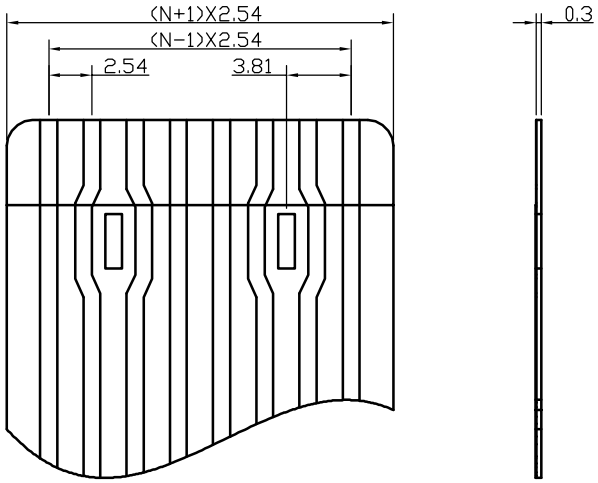

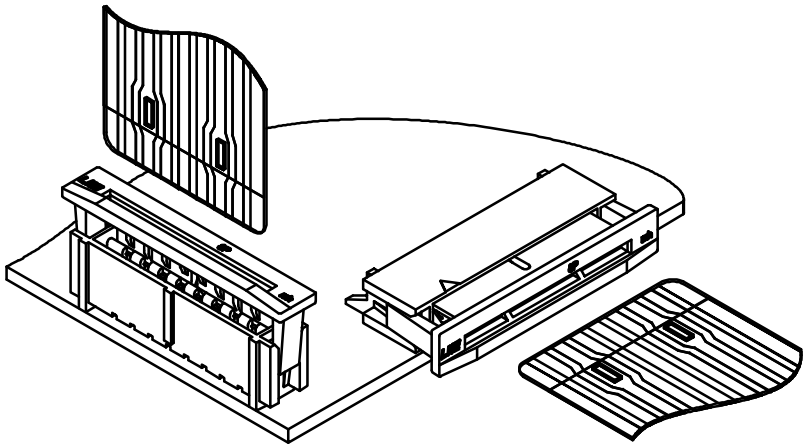

序号	图 号	名 称	材 料	数量	附 注

未注公差				LHE® 浙江联和电子有限公司 ZHEJIANG LIANHE ELECTRONICS CO.,LTD					
X.° ±3° X.X° ±0.5°									
>0-3	>3-18	>18-50	>50-120	单位	比例	Design Units	SIZE	页码	
±0.12	±0.15	±0.3	±0.5	MM Only	——	METRIC	A4		
制 作	审 核	批 准		材 料	图 号			Part No	
				见图解	品 名	FPC2.54			

旧底图总号	
底图总号	
签 字	
日 期	

FPC2.54型连接器承认图面

REV	SYM	REVISION RECORD	DR.	APPR.	DATE
A/0		原 始 版 本			20171027
A/1	D1	按厂家要求将2.45修改为2.48			20180810
A/2	D2	C尺寸改小0.3,公差改为±0.1,减小排线在腔体内摆幅			20190110
A/3	D3	内扣位置改成原来的对面,2.48变更为2.96±0.05			20190512
A/4	D4	定位柱高度由原来的1.5增高至2.75			20191127

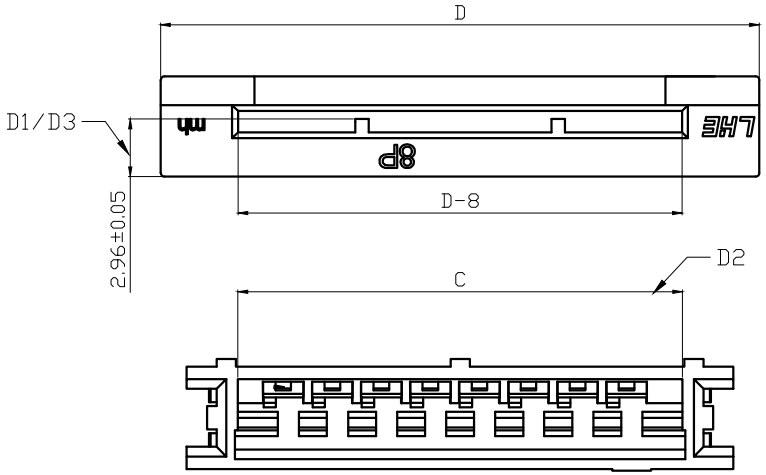

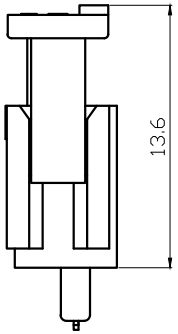

装配引脚前
Before assembly

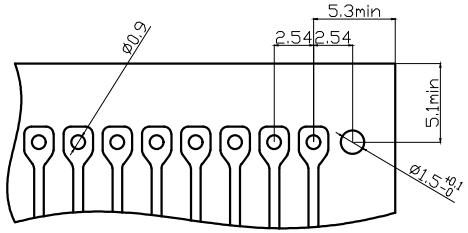

P.C.B LAYOUT

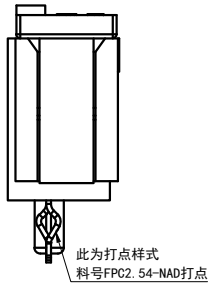

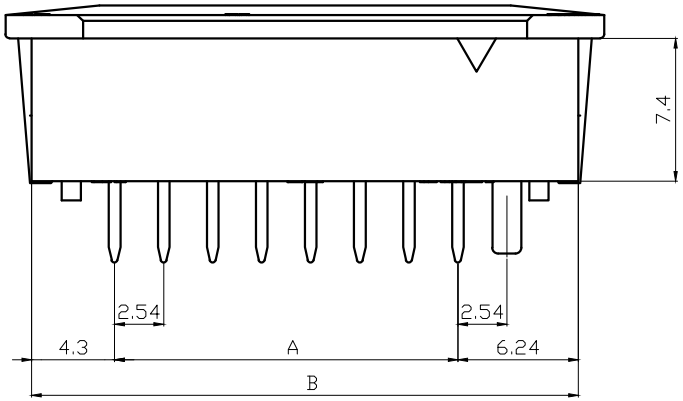

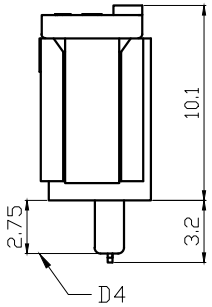

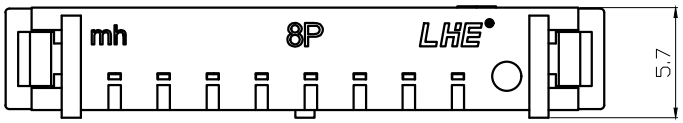

规格 Specifications

1、额定电流 Current rating：镀锡铜箔引脚/ 1.0A AC,DC
银浆炭黑外皮引脚/ 50mA AC,DC

2、额定电压 Voltage rating：250V AC,DC

3、温度范围(含通电温升) Temperature range：-40℃ to +85℃
(Including temperature rise in applying electrical current)

4、接触电阻 Contact resistance：
<镀锡铜箔引脚> 初期/ ≤30mΩ 环境测试后/ ≤50mΩ
<银浆炭黑外皮引脚>初期/ ≤10Ω 环境测试后/ ≤15Ω

5、绝缘电阻 Insulation resistance：≥1000MΩ

6、耐电压 Withstanding voltage：1200V AC/minute

7、适用 Applicable FFC\FPC：导体间距/ 2.54mm
导体宽度/ 1.0mm
接触部厚度/ 0.3±0.03mm

8、适用基板厚度 Applicable PC board thickness：1.6mm

Poles	Part No.		Dimensions mm A	B	C	D
8	F2541-DWV08	FPC2.54-8AD	17.78	28.32	23.02	31.00
10	F2541-DWV10	FPC2.54-10AD	22.86	33.40	28.10	36.08
12	F2541-DWV12	FPC2.54-12AD	27.94	38.48	33.18	41.16
14	F2541-DWV14	FPC2.54-14AD	33.02	43.56	38.26	46.24

序号	图 号	名 称	材 料	数量	附 注
3		Latch 锁扣	PBT	1	Green 绿色
2		Terminal 端子	Phos Bronze tin 磷青铜镀锡	N	
1		Housing 基座	PBT	1	Green 绿色

未注公差				单位	比例	Design Units	SIZE	页码
X.° ±3° X.X° ±0.5°								
>0-3	>3-18	>18-50	>50-120	MM Only	——	METRIC	A4	
±0.12	±0.15	±0.3	±0.5					
制 作	审 核	批 准		材 料	图 号			Part No.
				见图解	品 名	FPC2.54-NAD		

LHE® 浙江联和电子有限公司
ZHEJIANG LIANHE ELECTRONICS CO.,LTD

旧底图总号
底图总号
签 字
日 期

AUTODESK

FPC2.54型连接器承认图面

REV	DESCRIPTION	DATE
A/0	原 始 版 本	E
A/1	修 订 版 本	

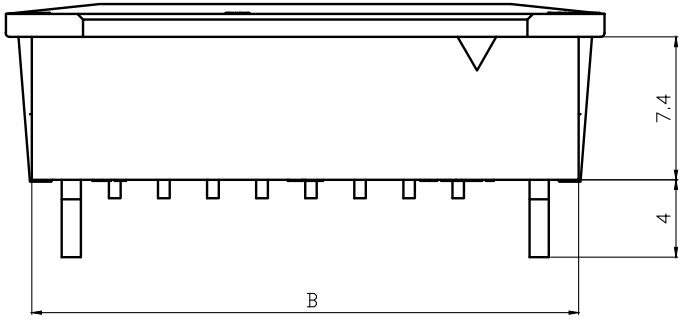

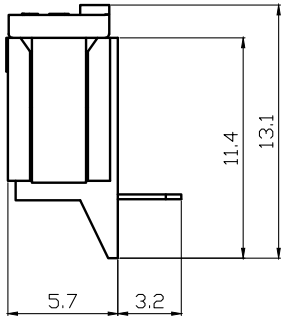

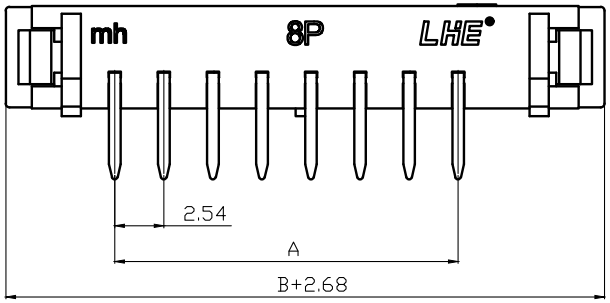

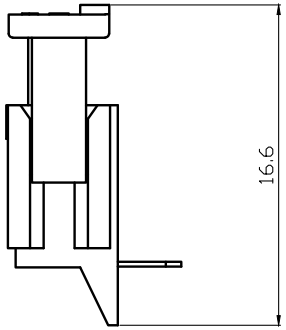

装配引脚前
Before assembly

规格 Specifications

1、额定电流 Current rating：镀锡铜箔引脚/ 1.0A AC,DC
银浆炭黑外皮引脚/ 50mA AC,DC

2、额定电压 Voltage rating：250V AC,DC

3、温度范围(含通电温升) Temperature range：-40°C to +85°C
(Including temperature rise in applying electrical current)

4、接触电阻 Contact resistance：
<镀锡铜箔引脚> 初期/ ≤30mΩ 环境测试后/ ≤50mΩ
<银浆炭黑外皮引脚>初期/ ≤10Ω 环境测试后/ ≤15Ω

5、绝缘电阻 Insulation resistance：≥1000MΩ

6、耐电压 Withstanding voltage：1200V AC/minute

7、适用 Applicable FFC\FPC：导体间距/ 2.54mm
导体宽度/ 1.0mm
接触部厚度/ 0.3±0.03mm

8、适用基板厚度 Applicable PC board thickness：1.6mm

Poles	Part No.		Dimensions mm	
			A	B
8	F2541-WR08	FPC2.54-8AWD	17.78	28.32
10	F2541-WR10	FPC2.54-10AWD	22.86	33.40
12	F2541-WR12	FPC2.54-12AWD	27.94	38.48
14	F2541-WR14	FPC2.54-14AWD	33.02	43.56

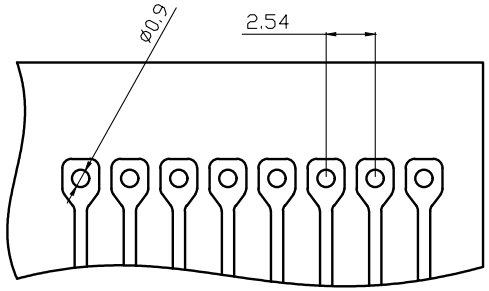

P.C.B LAYOUT

序号	图号	名称	材料	数量	附注
3		Latch 锁扣	PBT	1	Green 绿色
2		Terminal 端子	Phos Bronze tin 磷青铜镀锡	N	
1		Housing 基座	PBT	1	Green 绿色

未注公差
X.° ±3° X.X° ±0.5°

>0-3	>3-18	>18-50	>50-120
±0.12	±0.15	±0.3	±0.5

LHE® 浙江联和电子有限公司
ZHEJIANG LIANHE ELECTRONICS CO.,LTD

单位	比例	Design Units	SIZE	页码
MM Only	——	METRIC	A4	

制作	审核	批准	材料	图号	Part No
			见图解	品名	FPC2.54-NAWD

旧底图总号
底图总号
签 字
日 期

AUTODESK

产品规格书

PRODUCT SPECIFICAION

版本号
Version Number: A

产品编码
Part Number: F2541

■ 规格 Specifications

◆ 1、额定电流 Current rating：镀锡铜箔引脚/ 1.0A AC,DC
银浆炭黑外皮引脚/ 50mA AC,DC

◆ 2、额定电压 Voltage rating：250V AC,DC

◆ 3、温度范围(含通电温升) Temperature range：-40℃ to +85℃
(Including temperature rise in applying electrical current)

◆ 4、接触电阻 Contact resistance：
<镀锡铜箔引脚> 初期/ ≤30mΩ 环境测试后/ ≤50mΩ
<银浆炭黑外皮引脚>初期/ ≤10Ω 环境测试后/ ≤15Ω

◆ 5、绝缘电阻 Insulation resistance：≥1000MΩ

◆ 6、耐电压 Withstanding voltage：1200V AC/minute

◆ 7、适用 Applicable FFC\FPC：导体间距/ 2.54mm
导体宽度/ 1.0mm
接触部厚度/ 0.3±0.03mm

◆ 8、适用基板厚度 Applicable PC board thickness：1.6mm

产品性能测试 Performance test			
	项目 Item	测试条件 Test Condition	规格要求 Requirement
1	外观 Appearance	目测 Visual by eye 视力 Light: ＞1.0 照明 Lamp: 200～300Lx 目测距离 Space: 0.3～0.5m	1.塑料件表面应无明显疤痕、凹陷、开裂及影响使用的变形。 Plastic part:smooth and flat surface without discolor,broken,crack distortion defects is acceptable. 2.金属件表面无锈蚀、氧化、无明显的机械损伤等缺陷。 Metal part:btight and even surface without rust,oxide,fog and obvious physical damage defects is acceptable. 3.导线表面清洁、无破损等缺陷，印字及标志清晰。 Wire:clearing surface without discolor,broken defects,indistinct words and mark is acceptable.
2	接触电阻 Contact Resistance	插合连接器,用小功率电路进行测试。 Mate connectors,measure by dry circuit.	<镀锡铜箔引脚> 初期/ ≤30mΩ <银浆炭黑外皮引脚>初期/ ≤10Ω
3	绝缘电阻 Insulation Resistance	在相邻接触件之间或地线之间，用500V DC电压进行测试。 Apply 500V DC between adjacent terminal or ground.	1000mΩ MIN
4	耐电压 Dielectric Strength	相邻接触件之间或地线之间施加50Hz 1200V AC(有效值),漏电流1mA的电压作用，时间1min。 Mate connectors, apply 1200V AC for 1 minute between adjacent terminal or ground.	无击穿和飞弧现象 No Breakdown

产品规格书

PRODUCT SPECIFICAION

版本号
Version Number: A

产品编码
Part Number: F2541

产品性能测试 Performance test				
	项目 Item	测试条件 Test Condition	规格要求 Requirement	
5	压着部位抗张强度 Crimping Pull Out Force	在试验装置夹头中固定测试样品，在连接的轴线方向施加张力;速度不大于25mm/min。 Fix the crimped terminal,apply axial pull out force on the wire at the speed rate of not more 25mm/min.	--	--
6	壳体/端子固定力 Terminal/Housing Retention Force	固定连接器或测力计，在连接器轴线方向施加规定的拉力;速度不大于25mm/min。 Apply axial pull out force at the speed rate of not more 25mm/min on the pin assembled in the housing.	5N MIN	
7	针的固定力 Pin Retention Force	固定连接器或测力计，在连接器轴线方向对针施加规定的推力;速度不大于25mm/min。 Apply axial push out force at the speed rate of not more 25mm/minute on the terminal assembled in the base.	--	
8	可焊性 Solderability	把测试样品需要焊接的部位浸入焊锡炉中(锡炉温度245℃±5℃)2±0.5秒钟。 Soldering time: 2±0.5 second Solder Temperature:245℃±5℃	上锡率≥90% 90% of immersed area must show no voids,pin holes	
9	耐焊接热 Resistance to Soldering Heat	把测试样品需要焊接的部位浸入焊锡炉中(锡炉温度260℃)；2±0.5秒钟后在正常的条件下恢复1小时。 Soldering time: 2±0.5 second Solder Temperature:260℃	外观 Appearance	无损伤 No Damage
10	耐高温 Heat Resistance	连接器配合后，于85℃±2℃的空气中放置96小时，然后再回到室温中放置1～2h小时测定 Mated connectors are exposed to a temperature of 85℃±2℃ for 96 hours.	外观 Appearance 接触电阻 LLCR	无损伤 No Damage 50mΩ Max
11	耐低温 Clod Resistance	连接器配合后，于-40℃±2℃的空气中放置96小时，然后再回到室温中放置1～2h小时测定 Mated connectors are exposed to a temperature of -40℃±2℃for 96 hours.	外观 Appearance 接触电阻 LLCR	无损伤 No Damage 50mΩ Max
12	温度上升 Temperature Rise	插合连接器,通以最大允许电流。 Carring rated current load.	温度最大上升 Temperature Rise	30℃ MAX

产品规格书

PRODUCT SPECIFICAION

版本号
Version Number: A

产品编码
Part Number: F2541

产品性能测试 Performance test				
	项目 Item	测试条件 Test Condition	规格要求 Requirement	
13	恒定湿热 Humidity	温度：40±2℃ 相对湿度：90%～95% 搁置时间：96小时，取出恢复2h后检查 Temperature：40±2℃ Relative Humidity：90%～95% Duration：96 hours	外观 Appearance	无损伤 No Damage
			耐电压 Dielectric Strength	1000V,AC /minute
			绝缘电阻 Insulation Resistance	1000MΩ MIN
			接触电阻 LLCR	50mΩ MAX
14	温度循环 Temperature cycle	把测试样品放入高低温试验箱中,按下列步骤调试温度: a)在-40℃±2℃的恒温条件下放置0.5小时; b)在85℃±2℃的恒温条件下放置0.5小时; 从a)到b)为一个循环周期,共进行5个循环。恢复1h后检查。状态转换时间不多于1小时。 Mated connectors are exposed to 5 cycles of: a)-40℃±2℃ 0.5hour b)+85℃±2℃ 0.5hour	外观 Appearance	无损伤 No Damage
			耐电压 Dielectric Strength	1000V,AC /minute
			绝缘电阻 Insulation Resistance	1000MΩ MIN
			接触电阻 LLCR	50mΩ MAX
15	机械振动 Vibration	插合连接器，串联在一直流电源上，电流100mA;并模拟正常工作状态,振频为10～55Hz、振幅1.5mm；55～500Hz、加速度50m/s^2,每一轴线扫频循环次数10次、2小时。 Frequency：10～55Hz Amplitude：±1.5mm Frequency：＞55～500Hz Acceleration：50m/s^2 Duration：2 hours in each X,Y,Z axes	外观 Appearance	无损伤 No Damage
			接触电阻 Contact Resistance	50mΩ MAX
			中断 Intermittence	1μsec MAX
16	机械寿命 Repeated insertion/ withdrawal	以每分钟插拔10次的速率，插拔50次。 When mated up to 50 cycles repeatedly by the rate of 10 cycles per minute.	外观 Appearance	无损伤 No Damage
			耐电压 Dielectric Strength	1000V,AC /minute
			绝缘电阻 Insulation	1000MΩ MIN
			接触电阻 Contact Resistance	50mΩ MAX

产品规格书

PRODUCT SPECIFICAION

版本号
Version Number: A

产品编码
Part Number: F2541

产品性能测试 Performance test					
	项目 Item	测试条件 Test Condition	规格要求 Requirement		
17	盐雾 Salt Spray	把先冲后镀* 的测试样品从试验箱顶悬挂下来，采用浓度为5%±1(质量百分比)的氯化钠溶液，连续雾化16小时，试验后用流动的蒸馏水轻轻洗去表面沉积物。在常温常驻湿条件下恢复1～2小时。 16 hour exposure to a saltspray from the 5%±1 solution.	外观无损伤(五金件应无露出底金属的严重锈蚀；使用预镀的型材，其落料面允许有不影响其性能的轻微腐蚀。) Appearance:No Damage(No erosion with material exposed.And with plating material,slight erosion on the cutting surface acceptable)		
18	插入力与拔出力 Insertion and Withdrawal Force	相配的跳线以1mm/s～5mm/s的速度沿接插器轴线方向插入和拔出。 Insertion and withdraw cable at the speed rate of 1mm/s～5mm/s.		插入力（最大值） Insertion (Max)	拔出力（最小值） Withdrawal (Min)
			8P	--	--
			10P	--	--
			12P	--	--
			14P	--	--

制订 Edit: _____ 日期 Date: _____

审核 Check: _____ 日期 Date: _____

批准 Approval: _____ 日期 Date: _____

信 赖 性 试 验 成 绩 书

品名 (DESCRIPTION)	2.54mm FPC Connector	测定者 (Inspector)	吴曾原	测定条件 (Test Condition)	温度: 22℃ (Temperature)
番号 (MODEL NO.)	F2541	日期 (Date)	2017. 08. 19		湿度: 65% (Humidity)

试验项目 (Test Title)	规格 (Specification)		测定值(Data)					COM
			X1	X2	X3	X4	X5	
接触电阻 (C.R.)	30mΩ (Max)		14. 6	15. 3	17. 5	16. 5	15. 9	ok
绝缘电阻 (I.C.)	1000MΩ (Min)		∞	∞	∞	∞	∞	ok
耐电压(Dielectric Withstanding Voltage)	使用中不可有异常现象 (No physical damage shall be observed)		良好 (Good)	良好 (Good)	良好 (Good)	良好 (Good)	良好 (Good)	ok
脱出力 (PIN Retention)	0.50kg f (Min)		1. 16	1. 42	1. 84	1. 58	1. 6	ok
可焊性 (Altitude low temperature)	接触电阻 (C.R.)	50mΩ (Max)	18. 6	18. 9	17. 8	18. 5	19. 5	ok
	绝缘电阻 (I.C.)	1000MΩ (Min)	∞	∞	∞	∞	∞	ok
耐热性 (Resistance to high temperature)	接触电阻 (C.R.)	50mΩ (Max)	17. 8	18. 5	19. 6	18. 6	17. 5	ok
	绝缘电阻 (I.C.)	1000MΩ (Min)	∞	∞	∞	∞	∞	ok
耐湿性 (Humidity)	接触电阻 (C.R.)	50mΩ (Max)	20. 5	19. 8	20. 5	21. 5	20. 9	ok
	绝缘电阻 (I.C.)	1000MΩ (Min)	∞	∞	∞	∞	∞	ok
盐雾试验 (Salt spray)	不能有腐蚀现象 (No evident corrosion)		良好 (Good)	良好 (Good)	良好 (Good)	良好 (Good)	良好 (Good)	ok
	接触电阻 (C.R.)	500mΩ (Max)	19. 8	20. 5	21. 5	22. 6	21. 5	ok
热冲击试验 (Thermal shock)	接触电阻 (C.R.)	50mΩ (Max)	19. 5	20. 6	19. 7	18. 5	19. 5	ok
	绝缘电阻 (I.C.)	1000MΩ (Min)	∞	∞	∞	∞	∞	ok

浙江联和电子有限公司

全尺寸检测报告

表单编号：

客户	-	产品数量	-	产品料号	F2541-DWV08
检验日期	2017.08.21	检验数量	5	产品名称	FPC2.54-8AD
材料	PBT UL94V-0				
外观	无明显飞边毛刺，无缺料，无明显熔接痕				

序号	尺寸	公差		检验结果					判定	备注
		上	下	1	2	3	4	5		
1	4.3	4.45	4.15	4.33	4.28	4.28	4.35	4.32	OK	
2	2.54	2.66	2.42	2.56	2.55	2.51	2.52	2.51	OK	
3	6.24	6.39	6.09	6.26	6.27	6.23	6.21	6.23	OK	
4	2.5	2.62	2.38	2.52	2.51	2.49	2.51	2.48	OK	
5	7.4	7.55	7.25	7.43	7.44	7.41	7.39	7.38	OK	
6	5.7	5.85	5.55	5.72	5.71	5.69	5.68	5.72	OK	
7	3.2	3.35	3.05	3.22	3.18	3.2	3.19	3.21	OK	
8	10.1	10.3	9.95	10.13	10.11	10.08	10.07	10.09	OK	
9	13.6	13.8	13.5	13.66	13.65	13.56	13.58	13.63	OK	
10	17.78	17.9	17.6	17.85	17.83	17.73	17.75	17.8	OK	
11	28.32	28.6	28	28.35	28.37	28.3	28.28	28.31	OK	
12	31	31.3	30.7	31.05	31.08	31.06	31.05	31.07	OK	
13										
14										
15										
16										
17										
18										
19										
20										

核准：　　审核：CZH　　检验：WZY

浙江联和电子有限公司 品质章

浙江联和电子有限公司

全尺寸检测报告

表单编号：

客户	-	产品数量	-	产品料号	F2541-WR08
检验日期	2017.08.21	检验数量	5	产品名称	FPC2.54-8AWD
材料	PBT UL94V-0				
外观	无明显飞边毛刺，无缺料，无明显熔接痕				

序号	尺寸	公差		检验结果					判定	备注
		上	下	1	2	3	4	5		
1	4	4.15	3.85	4.02	4.01	3.98	3.99	3.98	OK	
2	2.54	2.66	2.42	2.53	2.55	2.51	2.52	2.56	OK	
3	7.4	7.55	7.25	7.42	7.44	7.38	7.39	7.38	OK	
4	5.7	5.85	5.55	5.73	5.71	5.69	5.68	5.69	OK	
5	3.2	3.35	3.05	3.21	3.18	3.22	3.19	3.21	OK	
6	11.4	11.6	11.3	11.44	11.38	11.42	11.43	11.39	OK	
7	13.1	13.3	13	13.12	13.16	13.06	13.15	13.09	OK	
8	16.6	16.8	16.5	16.66	16.63	16.58	16.57	16.64	OK	
9	17.78	17.9	17.6	17.84	17.83	17.74	17.75	17.8	OK	
10	28.32	28.6	28	28.36	28.37	28.29	28.28	28.31	OK	
11	31	31.3	30.7	31.07	31.06	31.08	31.05	31.07	OK	
12										
13										
14										
15										
16										
17										
18										
19										
20										

核准：　　审核：CZH　　检验：WZY

浙江联和电子有限公司 品质章

ECBT2.E364711
Connectors for Use in Data, Signal, Control and Power Applications - Component

If you notice a change to your ECBT2 Listing Card, click here to learn more.

Page Bottom

Connectors for Use in Data, Signal, Control and Power Applications - Component

See General Information for Connectors for Use in Data, Signal, Control and Power Applications - Component

ZHEJIANG LIANHE ELECTRONIC CO LTD E364711
Chuangxin Road, YueQing Bay Port Zone
Yueqing, Zhejiang 325600 CHINA

Connector, Model(s) 5557 followed by 2, followed by 1 thru 12, followed by A(T); followed by 2 thru 6, followed by A(T); followed by 2, followed by 1 thru 12, followed by A2 or AW; followed by 2 thru 6, followed by A2 or AW; followed by 2, followed by 1 thru 12, followed by Y(T); followed by 2 thru 6, followed by Y(T)

Connector, Model(s) B2502 followed by 2 thru 16, followed by Y(T)

Connector, Model(s) BH3.5-2A(T), BH3.5-2Y(T)

Connector, Model(s) MX3.0 followed by 2, followed by 1 thru 12, followed by A(T); followed by 2 thru 12, followed by A(T); followed by 2, followed by 1 thru 12, followed by A2 or AW; followed by 2 thru 12, followed by A2 or AW; followed by 2, followed by 1 thru 12, followed by Y(T); followed by 2 thru 12, followed by Y(T)

Connector, Model(s) PHB followed by 2 thru 16, followed by Y(T); followed by 2 thru 16, followed by AWD, A, AW

Connector, Model(s) Series 1.25, 1254, 1255, followed by -2 thru -25, followed by Y(T), A or AW

Connector, Model(s) Series 5264, followed by -2 thru -16, followed by Y(T), A or AWD

Connector, Model(s) Series PH, PHB, XHB, JC25, SCN, followed by -2 thru -20, followed by Y(T), A, AW or AWD

Connector, Model(s) Series SM, followed by -2 thru -18, followed by Y(T) or A(T)

Connector, Model(s) Series VH, 3.96, followed by -2 thru -16, followed by Y(T), A, AW or AWG

Connector, Model(s) Series XH, followed by -2 thru -20, followed by Y(T), A, AW, AWGD, AWD or AWGDJ

Connector, Model(s) ZH followed by 2 thru 16, followed by Y(T); followed by 2 thru 16, followed by AWD or A

Model(s) 5559-LHE, 5566-LHE, 5569-LHE, 5500-LHE, 5600-LHE, 51005-LHE, 51006-LHE, 2510-LHE, 5.08-LHE, 1.58-LHE, 5240-LHE, 5102-LHE, 63080-LHE, followed by 2 thru 6, followed by A(T), Y(T), A2 or AW

Model(s) 5559-LHE, 5566-LHE, 5569-LHE, 5500-LHE, 5600-LHE, 51005-LHE, 51006-LHE, 2510-LHE, 5.08-LHE, 1.58-LHE, 5240-LHE, 5102-LHE, 63080-LHE, followed by 2, followed by 1 thru 12, followed by A(T), Y(T), A2 or AW

Model(s) B2501-LHE, A2004-LHE, A4203-LHE, PHR-LHE, PHD-LHE, CH2.5-LHE, DF11-LHE, PHSD-LHE, A5001-LHE, 35155-LHE, 35156-LHE, 5195-LHE, 5196-LHE, followed by 2 thru 16, followed by Y(T)

Model(s) BHS-LHE, SMH250-LHE, SMH200-LHE, L6.2-LHE, 1806-LHE, 2060-LHE, 2541-LHE, JC15-LHE, XHD-LHE, followed by -2, followed by A(T), or Y(T)

Model(s) PHB, SZN-LHE, SAN-LHE, JC20-LHE, EH-LHE, EI-LHE, EL-LHE, S-EL-LHE, followed by 2 thru 16, followed by AWD, A, AW

Model(s) PHB, SZN-LHE, SAN-LHE, JC20-LHE, EH-LHE, EI-LHE, EL-LHE, S-EL-LHE, followed by 2 thru 16, followed by Y(T)

Model(s) XA-LHE, PA-LHE, VL-LHE, YL-LHE, SL-LHE, FL-LHE, YHD200-LHE, HA-LHE, LGC-LHE, JR-LHE, SP-LHE, 5025-LHE, followed by 2 thru 12, followed by A(T), Y(T), A2 or AW

Model(s) XA-LHE, PA-LHE, VL-LHE, YL-LHE, SL-LHE, FL-LHE, YHD200-LHE, HA-LHE, LGC-LHE, JR-LHE, SP-LHE, 5025-LHE, followed by 2, followed by 1 thru 12, followed by A(T), Y(T), A2 or AW

Model(s) ZH, ZHR-LHE, SH-LHE, GH-LHE, NH-LHE, C1251-LHE, DF14-LHE, 5501-LHE, 75416-LHE, 543-LHE, followed by 2 thru 16, followed by AWD or A

Model(s) ZH, ZHR-LHE, SH-LHE, GH-LHE, NH-LHE, C1251-LHE, DF14-LHE, 5501-LHE, 75416-LHE, 543-LHE, followed by 2 thru 16, followed by Y(T)

Marking: Company name or trademark LHE , model designation and the Recognized Component Mark, on the device or carton.

Last Updated on 2017-11-14

Questions? Print this page Terms of Use Page Top

© 2017 UL LLC

The appearance of a company's name or product in this database does not in itself assure that products so identified have been manufactured under UL's Follow-Up Service. Only those products bearing the UL Mark should be considered to be Certified and covered under UL's Follow-Up Service. Always look for the Mark on the product.

UL permits the reproduction of the material contained in the Online Certification Directory subject to the following conditions: 1. The Guide Information, Assemblies, Constructions, Designs, Systems, and/or Certifications (files) must be presented in their entirety and in a non-misleading manner, without any manipulation of the data (or drawings). 2. The statement "Reprinted from the Online Certifications Directory with permission from UL" must appear adjacent to the extracted material. In addition, the reprinted material must include a copyright notice in the following format: "© 2017 UL LLC".

产品认证证书

证书编号：CQC17134174484

申请人名称及地址

浙江联和电子有限公司

浙江省乐清市乐清湾港区乐商创业园

制造商名称及地址

浙江联和电子有限公司

浙江省乐清市乐清湾港区乐商创业园

生产企业名称及地址

浙江联和电子有限公司(V028069)

浙江省乐清市乐清湾港区创新路8号

产品名称和系列、规格、型号

连接器聚酰胺66(PA66)

型号见附件，材料名称：聚酰胺（PA66），材料牌号：A63RV0，全色， 球压:200℃，灼热丝可燃性指数(GWFI):960/0.3，灼热丝起燃温度(GWIT):960/0.3，燃烧等级:V-0@0.3mm,CTI600，红外光谱,差示扫描量热和热重分析见报告V-00601-2017134003019.

产品标准和技术要求

GB/T5169.21-2017，GB/T 5169.12-2013，GB/T 5169.13-2013，GB/T 5169.16-2017，GB/T 4207-2012，GB/T 6040-2002，GB/T 19466.1-2004，GB/T 19466.2-2004，GB/T 19466.3-2004，ISO 11358-1:2014

认证模式

产品检测+获证后监督

上述产品符合CQC13-036047-2009认证规则的要求，特发此证。

发证日期：2019年03月22日

本证书的有效性依据发证机构的定期监督获得保持。

本证书为变更证书，证书首次颁发日期：2017年07月27日

主任：

中国质量认证中心

CHINA QUALITY CERTIFICATION CENTRE

中国质量认证中心

中国．北京．南四环西路188号9区 100070

http://www.cqc.com.cn

C 0144189

Verification No.: CLZJ1411264692

VERIFICATION OF LVD COMPLIANCE

Applicant:	Zhejiang Lianhe Electrical Co., Ltd. Houyu village, Shifan town, Yueqing city, Zhejiang province, China.
Manufacturer:	Same as applicant
Product Description:	Connector Terminal
Model No:	A1001, A1002, A1003, A1251, A1252, A1253, A1254, A1255, A1256, A1257, A1501, A1502, A1503, A2001, A2002, A2003, A2004, A2005, A2006, A2007, A2501, A2502, A2503, A2504, A2505, A2505, A2506, A2507, A2541, A2542, A2543, A2544, A2545, A3961, A3962, A3963, A3564, A5081, A5082, B1501, B1502, B2001, B2002, B2501, B2502, C01581, C01582, C1251, C2001, C2002, C2501, C2502, C2505, C2506, C3001, C3002, C3003, C3004, C3005, C3006, C3501, C3502, C3701, C3702, C4001, C4002, C4141, C4142, C4201, C4202, C4203, C4204, C4601, C4602, C4501, C4502, C4503, C4504, C5001, C5002, C5031, C5032, C6201, C6202, C6351, C6352, C6701, C6702, D2801, D2802, D2803, D4801, D4802, D4803, D4804, D6301, D6302, D6303

Sufficient samples of the product have been tested and found to be in conformity with

Test Standard:	EN 60320-1:2001/A1:2007 EN 60529:1991/A1:2000
As shown in the Test Report Number(s):	TLZJ1411264692
Date of issue:	November 27, 2014

Conclusion

This Verification of LVD Compliance has been granted to the applicant based on the results of tests, performed by laboratory of Global Testing Services Co., Ltd on sample of the above-mentioned product in accordance with the provisions of the relevant specific standards and the Low Voltage Directive 2014/35/EU. The CE marking as shown below can be affixed, under the responsibility of the manufacturer, after completion of an EC Declaration of Conformity and compliance with all relevant EC Directives. The affixing of the CE marking presumes in addition that conditions the conditions in annexes IIIand IV of the Directive are fulfilled.

Approved by: Hermann Weiher

For and on behalf of
Global Testing Services Co., Ltd

Global Testing Services Co., Ltd
E-mail:info@gts-lab.com http://www.gts-lab.com
Room 1501-1502, No. 520 Yishan Rd., Xuhui District, Shanghai, 200235 China

Copyright of this certificate is owned by Global Testing Services Co., Ltd and may not be reproduced other than in full and with the prior approval of the General Manager.

QUALITY MANAGEMENT SYSTEM CERTIFICATE

Certificate No. 00117Q310977R2S/3302

We hereby certify that

Zhejiang LianHe Electronics Co., Ltd.

Unified Social Credit Code/ Organization Code certificate: 913303825540033504

Registration Address: Houyu Village, Shifan Town, Yueqing City, Wenzhou City, Zhejiang Province, China
Production Address: Yueshang Pioneer Park, Yueqing Bay Port Area, Yueqing City, Wenzhou City, Zhejiang Province China

by reason of its

Quality Management System

has been awarded this certificate for compliance with the standard

GB/T 19001-2016 / ISO 9001:2015

The Quality Management System Applies in the following area:

The Design, Production of Electronics Connector

Certified since: February 13, 2012 Valid from: December 11, 2017 Valid until: December 14, 2020

After a surveillance cycle, the certificate is valid only when used together with an Acceptance Notice of Surveillance Audit issued by CQC.
Please access www.cqc.com.cn for checking validity of the certificate.
This certificate and its relevant information can query in the website of Certification and Accreditation Administration of the People's Republic of China (www.cnca.gov.cn).

中国认可
国际互认
管理体系
MANAGEMENT SYSTEM
CNAS C001-M

Signed by: Wang Kejiao

CHINA QUALITY CERTIFICATION CENTRE

Section 9, No.188, Nansihuan(the South Fourth Ring Road) Xilu(West Road), Beijing 100070,China
http://www.cqc.com.cn

Q 0073728

2015年版

THE INTERNATIONAL CERTIFICATION NETWORK

CERTIFICATE

IQNet and
CQC
hereby certify that the organization

Zhejiang LianHe Electronics Co., Ltd.

Registration Address: Houyu Village, Shifan Town, Yueqing City, Wenzhou City, Zhejiang Province, China
Production Address: Yueshang Pioneer Park, Yueqing Bay Port Area, Yueqing City, Wenzhou City, Zhejiang Province China

For the following field of activities

The Design, Production of Electronics Connector

Has implemented and maintains a
Management System
Which fulfils the requirements of the following standard

GB/T 19001-2016 / ISO 9001:2015

Issued on: December 11, 2017

Validity date: December 14, 2020

Registration Number: 00117Q310977R2S/3302

Michael Drechsel
President of IQNet

Wang Kejiao
President of CQC

IQNet Partners*:
AENOR *Spain* AFNOR Certification *France* AIB-Vinçotte International *Belgium* ANCE-SIGE *Mexico* APCER *Portugal* CCC *Cyprus*
CISQ *Italy* CQC *China* CQM *China* CQS *Czech Republic* Cro Cert *Croatia* DQS Holding GmbH *Germany*
FCAV *Brazil* FONDONORMA *Venezuela* ICONTEC *Colombia* IMNC *Mexico* Inspecta Certification *Finland* IRAM *Argentina*
JQA *Japan* KFQ *Korea* MIRTEC *Greece* MSZT *Hungary* Nemko AS *Norway* NSAI *Ireland* PCBC *Poland*
Quality Austria *Austria* RR *Russia* SII *Israel* SIQ *Slovenia* SIRIM QAS International *Malaysia*
SQS *Switzerland* SRAC *Romania* TEST St Petersburg *Russia* TSE *Turkey* YUQS *Serbia*
IQNet is represented in the USA by: AFNOR Certification, CISQ, DQS Holding GmbH and NSAI Inc.
* The list of IQNet partners is valid at the time of issue of this certificate. Updated information is available under www.iqnet-certification.com

检测报告(Test Report)

报告编号(Report No.)：WTF21H03018118C-2 日期(Date)：2021/3/15 页数(Page)：1 of 8

委托单位： 浙江联和电子有限公司
Applicant: zhejiang lianhe electronics co,.ltd
单位地址： 浙江省乐清市乐清湾港区创新路 8 号
Address: No. 8, Chuangxin Road, Yueqing Bay Port District, Yueqing City, Zhejiang Province

样品信息(Sample Information)：
样品名称(Sample Name)： PBT 连接器+色粉(PBT connector + toner)
样品描述(Sample Description)： 黑色塑胶(Black plastic)
样品型号(Sample Model)： 请参见后续页(Please refer to following page(s))。
委托日期(Sample Received Date)： 2021/3/11
检测日期(Testing Period)： 2021/3/11 - 2021/3/15

检测结果(Test Result)： 请参见后续页(Please refer to following page(s))。

检测要求(Test Requested) ：	结论(Conclusion)
根据客户要求，参照欧盟 RoHS 指令 2011/65/EU 及其修订指令 EU 2015/863&客户限值，检测样品中的铅、镉、汞、六价铬、多溴联苯、多溴二苯醚、DBP、BBP、DEHP、DIBP 的含量(As specified by client, to determine the Pb, Cd, Hg, Cr(VI), PBBs, PBDEs, DBP, BBP, DEHP, DIBP content in the sample with reference to EU RoHS Directive 2011/65/EU and its amendment Directive EU 2015/863&Client's Limit.)。	合格(PASS)

授权签字人
Signed for and on behalf of HCT

Kathy Liu

Kathy Liu

Shenzhen Hongcai Testing Technology Co., Ltd
深圳市虹彩检测
技术有限公司
报告专用章

检测报告(Test Report)

报告编号(Report No.)：WTF21H03018118C-2 日期(Date)：2021/3/15 页数(Page)：2 of 8

样品型号(Sample Model)：

1.0 SH SHD NH 1.25 51021 DF14 DF13 GH ZH PH PHB PAPHSD DF11 C1251 51047
51146 FI-S PHD YHD200 SMW SMH200 SMH200-H YH200/20039WR 杜邦(DuPont) 2.0 XH/TJC3 XA
HAXHB XHD XHE XHQ EH EI/小四(Small four) P 5264 5267 SZN SAN SCN SCND JC15 JC20 5102 5240
SMH250 SMP250 SMW250 25048HS 25045HP SM TJC8/杜邦(DuPont) 2.54 TJC8A/杜邦带锁(DuPont with lock)
TJC8B TJC8H 5051/2510 543 美尚美(Meishangmei) CH10 25415 43640 43645 43020 43025 5500 5600 VH
VHRR/YH396 VHR 35156 2139/3.96 90331 5195 5196 39612 FL 5557 5559 5566 5569 42474
42475 SL RV42 CL014/OTP ELYL 小(Small) EL QH NV 50300 50301 8981/大四(Big four) P 5058/5.08 5197
5198 5025 L6.2 VL VLP/VLR 3191 5199 TJC2 TJC2ATJC2B STV5 YHL500 YWL500 TJC4
TJC1 SMF Cy-X201/35108 35150 35151 35224 35180 35965 1806 110 2.8 42021 42022 42002
6.3 250 35955 SASCS 35189 35196 MX3.0 1.58 51005 51006 BH3.5 BH4.0 63080 187 4.8
51004 TJC15 D220 D230 D250 D480 D520 D280 D630 D430 D400 D450 U-T MKH
F1001-T SIN-T 774 773 778 294 TU-JTK(SV) TU(SNB) TO-JTK(RV) MDD FDD TG-JT IDC
AUTO CONNECTOR DJ70 DT04 DT06 UY/K1 UY2/K2 UR/K3 UR2 UB/K4 UB2AUG/K5
U1R/K8 U1B/K9 HJKT10 UDW2 314A4203A5001 A5002 MC100 FPC2.54 SMH SGN PHR
ZHR 205 5.2 C1801 C1802 2060 SMP JC25 CH2.5 A5003 ME020 ME010 FPC/FFC
(1.0 SH SHD NH 1.25 51021 DF14 DF13 GH ZH PH PHB PAPHSD DF11 C1251 51047
51146 FI-S PHD YHD200 SMW SMH200 SMH200-H YH200/20039WR DUBANG 2.0 XH/TJC3 XA
HAXHB XHD XHE XHQ EH EI/X4 P 5264 5267 SZN SAN SCN SCND JC15 JC20
5102 5240 SMH250 SMP250 SMW250 25048HS 25045HP SM TJC8/DUBANG 2.54 TJC8A/DUBANG-S
TJC8B TJC8H 5051/2510 543 MEISHANGMEI CH10 25415 43640 43645 43020 43025 5500 5600 VH
VHRR/YH396 VHR 35156 2139/3.96 90331 5195 5196 39612 FL 5557 5559 5566 5569 42474
42475 SL RV42 CL014/OTP ELYL SMALL EL QH NV 50300 50301 8981/D4 P 5058/5.08 5197
5198 5025 L6.2 VL VLP/VLR 3191 5199 TJC2 TJC2ATJC2B STV5 YHL500 YWL500 TJC4
TJC1 SMF Cy-X201/35108 35150 35151 35224 35180 35965 1806 110 2.8 42021 42022 42002
6.3 250 35955 SASCS 35189 35196 MX3.0 1.58 51005 51006 BH3.5 BH4.0 63080 187 4.8
51004 TJC15 D220 D230 D250 D480 D520 D280 D630 D430 D400 D450 U-T MKH
F1001-T SIN-T 774 773 778 294 TU-JTK(SV) TU(SNB) TO-JTK(RV) MDD FD NH XHQ 42474 42475 QH NV 50300 50301 5025 3191 5199 STV5 YHL500 YWL500 F001 F002 D440 D600 D620 D700 D220 D230 D250 D480 D520 D280 D630 D430 D400 D450 U-T F1001-T SIN-T 774 773 778 294 TU-JTK(SV) TU(SNB) TO-JTK(RV) MDD FDD TG-JT IDC AUTO CONNECTOR DJ70 DT04 DT06 UY/K1 UY2/K2 UR/K3 UR2 UB/K4 UB2A UG/K5 U1R/K8 U1B/K9 HJKT10 UDW2 314 A5001 A5002 MC100 FPC2.54 SGN PHR ZHR 205 5.2 C1801 C1802 2060

Shenzhen Hongcai Testing Technology Co., Ltd 深圳市虹彩检测技术有限公司 报告专用章

检测报告(Test Report)

报告编号(Report No.)：WTF21H03018118C-2 日期(Date)：2021/3/15 页数(Page)：3 of 8

A5003 ME020 ME010 FPC/FFC B2541 1971845 1971846 2232043 2232044 2232511 1971895 1971896 JWPF SY Molex1.5 ME0100 RAST A5004 DV SJN SDN 35182 35524 RCY LC VR SHJ SHL DF19 ACH IL-Z SATA XSR SUR SUH ZE ZND ZPD SFH PUD AMP2.0 35507 DF3 PND RE RA RF SYP/SYR HIF3 MC100/ME020/ME010 F2541 A5005 A5006 A5007 A2509 A25010 A25011 A25012 B13001 B76201 VHB VHC VHD

1969738, 1969740, 1971845, 1971846, 1971895, 1971896, 1971946 thru 1971949, 1971954 thru 1971957, 2232008 thru 2232011, 2232000 thru 2232003, 2232016 thru 2232019, 1971962 thru 1971965, 2232024 thru 2232027, 2232289 thru 2232292, 2232043 thru 2232074, 2232298 thru 2232301, 2232511, 2232532, 2232557, 2232559, 2232560, 2232562, 2232563, 2232565, 2232566, 2232568, 2232569, 2232571, 2232572, 2232574, 2232575, 2232577, 2232578, 2232580, 2232581, 2232583, 2232584, 2232586, 2232587, 2232589, 2232590, 2232592, 2232593, 2232595, 2232596, 2232598, 2232599, 2232601, 2232602, 2232604, 2232605, 2232607, 2232608, 2232611 thru 2232682, 2292457, 2292458,

Shenzhen Hongcai Testing Technology Co., Ltd 深圳市虹彩检测技术有限公司 报告专用章

检测报告(Test Report)

报告编号(Report No.)：WTF21H03018118C-2 日期(Date)：2021/3/15 页数(Page)：4 of 8

检测结果(Test Result(s))： 单位(Unit)：mg/kg

检测项目 (Test Items)	检测方法/仪器 (Test Method/ Equipment)	方法检出限 (MDL)	含 量 (Content)	客户限值 (Client's Limit)
铅 Lead(Pb)	IEC 62321-5:2013. ICP-OES/AAS	2	N.D.	600#
镉 Cadmium(Cd)		2	N.D.	75
汞 Mercury(Hg)	IEC 62321-4:2013 +AMD1:2017. ICP-OES	2	N.D.	600
六价铬 Hexavalent Chromium(Cr(VI))	IEC 62321-5:2013/ IEC 62321-7-2:2017. ICP-OES/AAS UV-VIS	8	N.D.	600##
一溴联苯 Mono-bromobiphenyl	IEC 62321-6:2015. GC-MS	5	N.D.	—
二溴联苯 Di-bromobiphenyl		5	N.D.	
三溴联苯 Tri-bromobiphenyl		5	N.D.	
四溴联苯 Tetra-bromobiphenyl		5	N.D.	
五溴联苯 Penta-bromobiphenyl		5	N.D.	
六溴联苯 Hexa-bromobiphenyl		5	N.D.	
七溴联苯 Hepta-bromobiphenyl		5	N.D.	
八溴联苯 Octa-bromobiphenyl		5	N.D.	
九溴联苯 Nona-bromobiphenyl		5	N.D.	
十溴联苯 Deca-bromobiphenyl		5	N.D.	
多溴联苯 Polybrominated Biphenyls(PBBs)		—	N.D.	600
一溴二苯醚 Mono-bromodiphenyl ether		5	N.D.	—
二溴二苯醚 Di-bromodiphenyl ether		5	N.D.	
三溴二苯醚 Tri-bromodiphenyl ether		5	N.D.	
四溴二苯醚 Tetra-bromodiphenyl ether		5	N.D.	
五溴二苯醚 Penta-bromodiphenyl ether		5	N.D.	
六溴二苯醚 Hexa-bromodiphenyl ether		5	N.D.	
七溴二苯醚 Hepta-bromodiphenyl ether		5	N.D.	
八溴二苯醚 Octa-bromodiphenyl ether		5	N.D.	
九溴二苯醚 Nona-bromodiphenyl ether		5	N.D.	
十溴二苯醚 Deca-bromodiphenyl ether		5	N.D.	
多溴二苯醚 Polybrominated Diphenyl Ethers(PBDEs)		—	N.D.	600

Shenzhen Hongcai Testing Technology Co., Ltd 深圳市虹彩检测技术有限公司 报告专用章

检测报告(Test Report)

报告编号(Report No.)：WTF21H03018118C-2 日期(Date)：2021/3/15 页数(Page)：5 of 8

检测项目 (Test Items)	检测方法/仪器 (Test Method/ Equipment)	方法检出限 (MDL)	含 量 (Content)	客户限值 (Client's Limit)
邻苯二甲酸二正丁酯 Dibutyl phthalate (DBP)	IEC 62321-8:2017, GC-MS	30	N.D.	600
邻苯二甲酸丁苄酯 Butylbenzyl phthalate (BBP)		30	N.D.	600
邻苯二甲酸二(2-乙基己基)酯 Di-(2-ethylhexyl) Phthalate (DEHP)		30	N.D.	600
邻苯二甲酸二异丁酯 Di-iso-butyl phthalate (DIBP)		30	N.D.	600

备注(Note)： mg/kg = ppm=parts per million

MDL=Method Detection Limit 方法检出限

N.D.=Not Detected(less than method detection limit)，未检出（小于方法检出限）

"—"=Not regulated 无规定

Results shown as N.D. are ignored in the sum calculation.结果显示为 N.D.不计入总和的计算。

The detected Chromium (Cr) content is "N.D.", therefore, the Hexavalent Chromium (Cr (VI)) content is "N.D.", No need for validation test of the Hexavalent Chromium (Cr (VI)).检测的铬（Cr）含量是"N.D."，则六价铬（Cr(VI)）含量也是"N.D."，不需要进行六价铬（Cr(VI)）的确认性测试。

If Chromium (Cr) content exceeds Hexavalent Chromium (Cr (VI)) method detection limit, Validation test of the Hexavalent Chromium (Cr (VI)) is required.

若铬（Cr）含量超过六价铬（Cr(VI)）方法检出限，需要进行六价铬（Cr(VI)）的确认性测试。

#=PVC category power cord≤300mg/kg, steel alloy≤3200mg/kg, aluminum alloy≤3600mg/kg, copper alloy≤ 36000mg/kg, other material≤600mg/kg.

PVC 类电源线≤300mg/kg，钢合金≤3200mg/kg，铝合金≤3600mg/kg，铜合金≤ 36000mg/kg，其他物料≤600mg/kg。

##=Trivalent chromium surface treatment and hot dip galvanized sheet plating ≤50mg/kg, electroplating color zinc surface and electroplating white zinc surface and other chromium-free treatment plating N.D., other materials ≤600mg/kg.

三价铬表面处理和热镀锌板镀层≤50mg/kg，电镀彩锌表面和电镀白锌表面以及其他无铬处理镀层 N.D.，其他物料≤600mg/kg。

Result(s) of specimen(s) is(are) quoted from HCT report No.WTF21H03018118C-1.

样品的数据是引自 HCT 报告号为 WTF21H03018118C-1 的数据。

Shenzhen Hongcai Testing Technology Co., Ltd 深圳市虹彩检测技术有限公司 报告专用章

检测报告(Test Report)

报告编号(Report No.)：WTF21H03018118C-2 日期(Date)：2021/3/15 页数(Page)：6 of 8

铅、镉、汞、六价铬、多溴联苯、多溴二苯醚的检测流程图

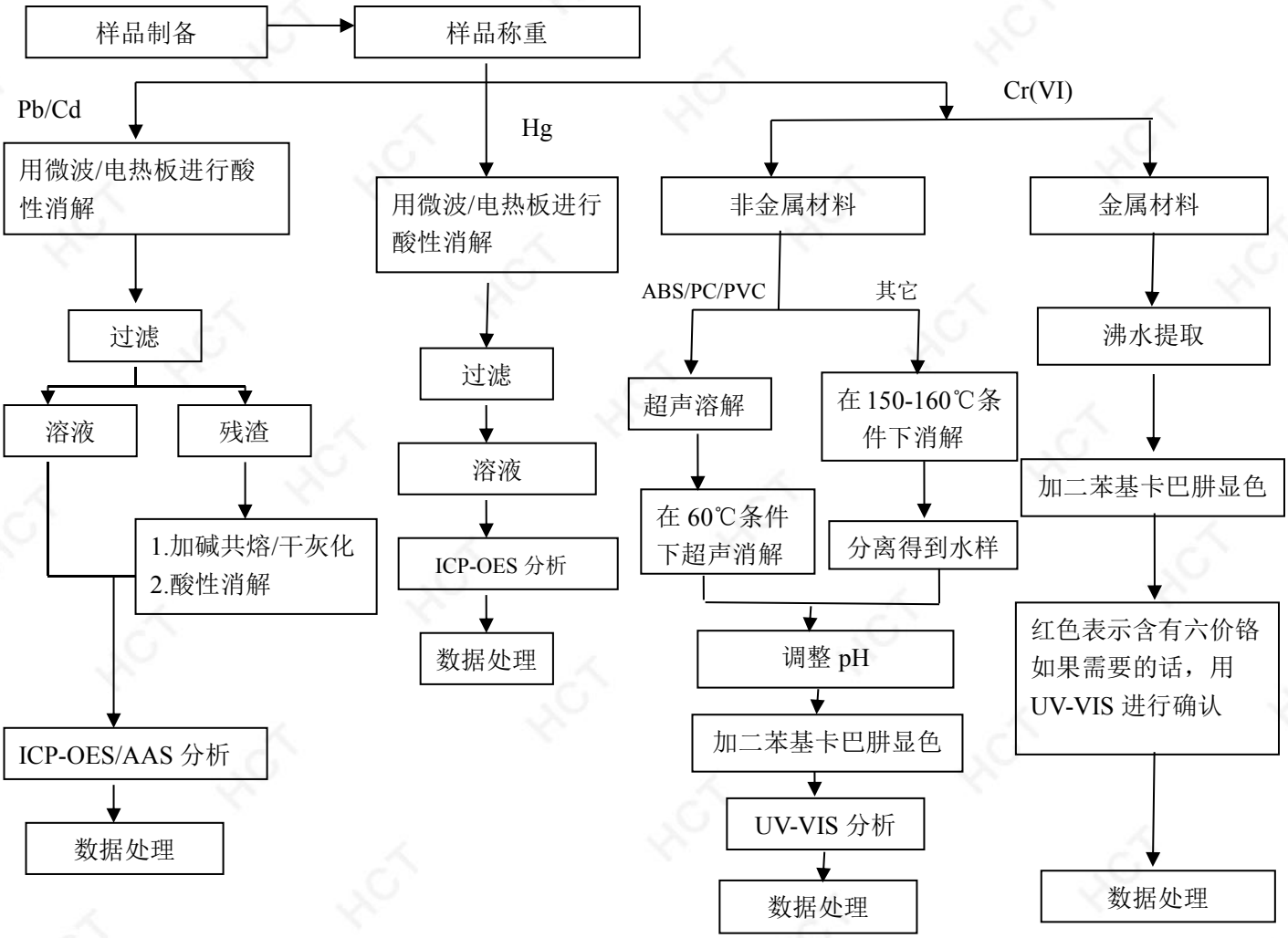

根据以上的流程图之条件，样品已经完全溶解(六价铬检测方法除外)。

PBBs/PBDEs

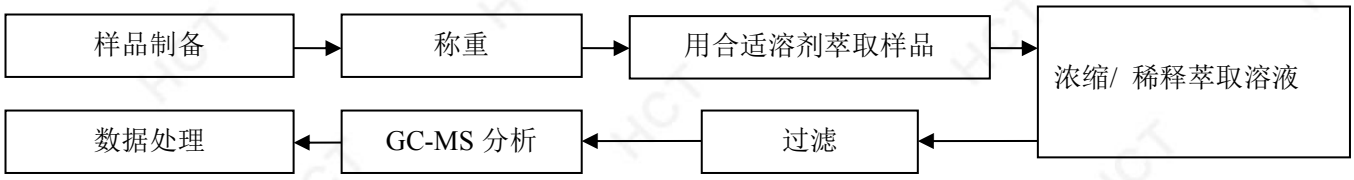

Shenzhen Hongcai Testing Technology Co., Ltd 深圳市虹彩检测技术有限公司 报告专用章

检测报告(Test Report)

报告编号(Report No.)：WTF21H03018118C-2 日期(Date)：2021/3/15 页数(Page)：7 of 8

Test Flow Chart for Pb, Cd, Hg, Cr(VI), PBBs, PBDEs

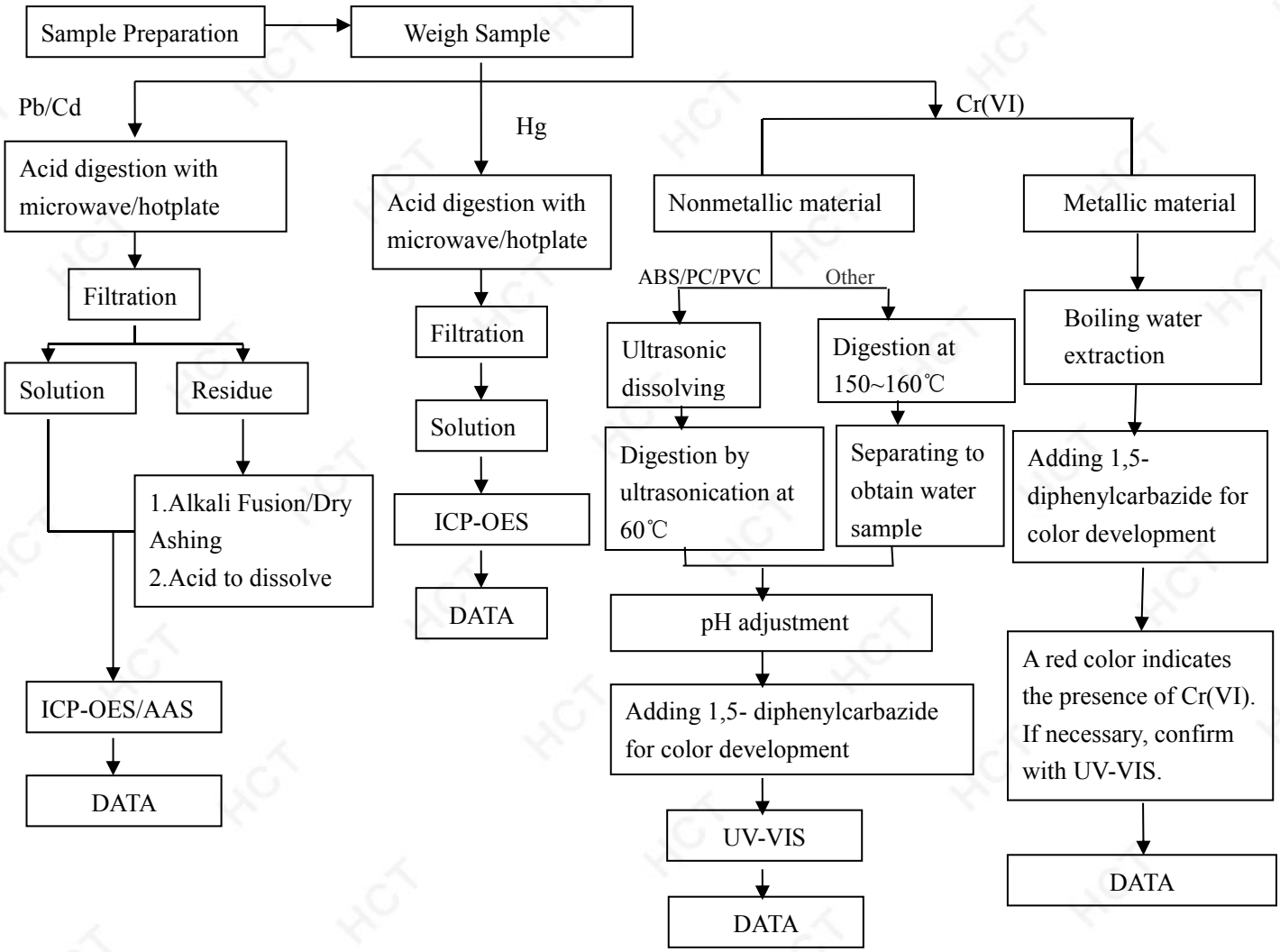

These sample were dissolved totally by pre-conditioning method according to above flow chart(Cr(VI) test method excluded)

PBBs/PBDEs

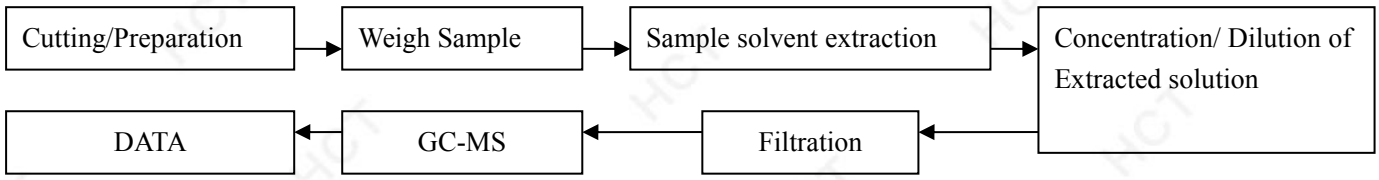

Shenzhen Hongcai Testing Technology Co., Ltd 深圳市虹彩检测技术有限公司 报告专用章

检测报告(Test Report)

报告编号(Report No.)：WTF21H03018118C-2 日期(Date)：2021/3/15 页数(Page)：8 of 8

DBP, BBP, DEHP, DIBP 的检测流程图
(Test Flow Chart for DBP, BBP, DEHP, DIBP)

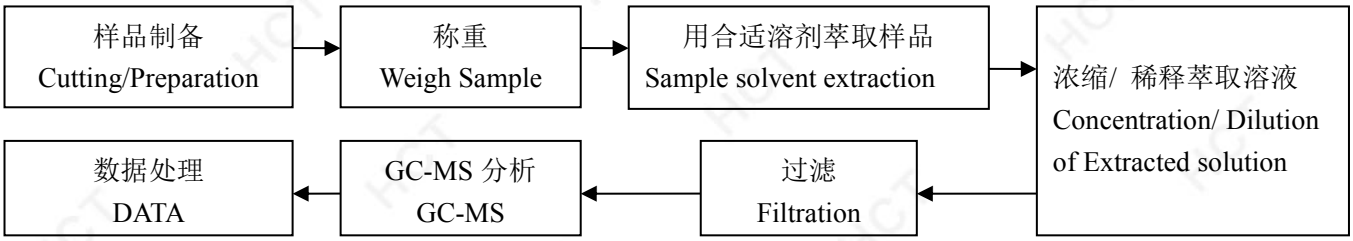

样 品 附 图(The photo of the sample)

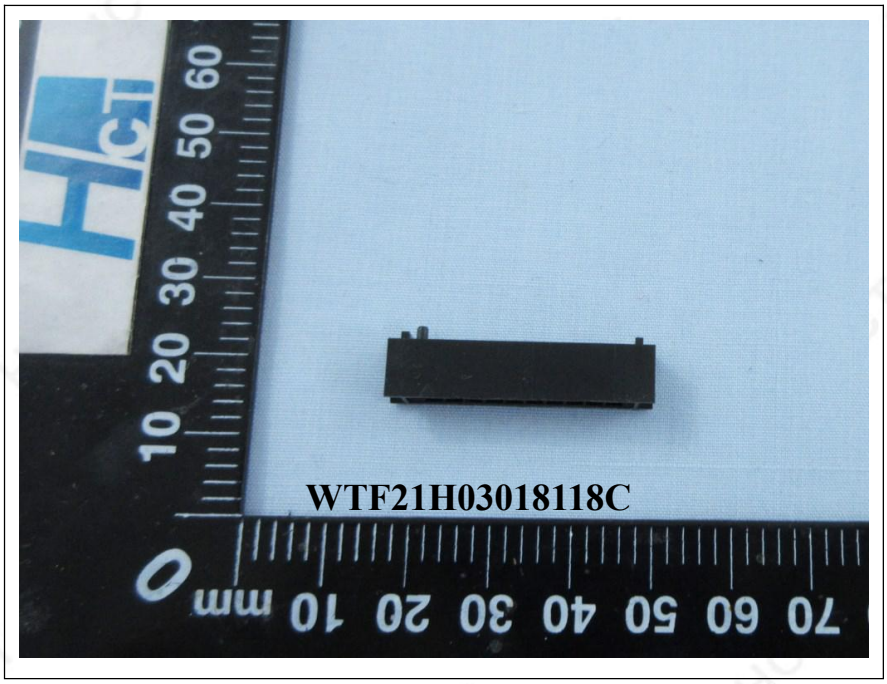

*****报告结束(End)*****

本报告 HCT 盖章才生效，本报告不可以删改。本报告只对接收样品的检测结果负责。
未经本公司书面授权，不得部分复制本报告做宣传品使用。

This report will go into effect with HCT stamp. This report could not be revised. This report is only responsible for the test result of received samples. Without written authorization, any copy of this report for propaganda is invalid.

深圳市虹彩检测技术有限公司 报告专用章

测试报告

No. SHAEC2108746204　　日期: 2021年05月12日　第1页,共6页

浙江联和电子有限公司
浙江省乐清市乐清湾港区

以下测试之样品是由申请者所提供及确认：端子针

SGS工作编号：	SP21-013321 - SH
型号：	xh
客户参考信息：	见附件
样品接收日期：	2021年05月08日
测试周期：	2021年05月08日 - 2021年05月12日
测试要求：	根据客户要求测试
测试方法：	请参见下一页
测试结果：	请参见下一页
结论：	基于所送样品进行的测试，镉、铅、汞、六价铬的测试结果不超过客户限值。

通标标准技术服务（上海）有限公司
授权签名

scan to see the report
SHAEC2108746204

Jenny Lan兰柳珍
批准签署人

Unless otherwise agreed in writing, this document is issued by the Company subject to its General Conditions of Service printed overleaf, available on request or accessible at http://www.sgs.com/en/Terms-and-Conditions.aspx and, for electronic format documents, subject to Terms and Conditions for Electronic Documents at http://www.sgs.com/en/Terms-and-Conditions/Terms-e-Document.aspx. Attention is drawn to the limitation of liability, indemnification and jurisdiction issues defined therein. Any holder of this document is advised that information contained hereon reflects the Company's findings at the time of its intervention only and within the limits of Client's instructions, if any. The Company's sole responsibility is to its Client and this document does not exonerate parties to a transaction from exercising all their rights and obligations under the transaction documents. This document cannot be reproduced except in full, without prior written approval of the Company. Any unauthorized alteration, forgery or falsification of the content or appearance of this document is unlawful and offenders may be prosecuted to the fullest extent of the law. Unless otherwise stated the results shown in this test report refer only to the sample(s) tested .
Attention: To check the authenticity of testing /inspection report & certificate, please contact us at telephone: (86-755) 8307 1443, or email: CN.Doccheck@sgs.com

3rd Building,No.889 Yishan Road Xuhui District,Shanghai China 200233　t E&E (86-21) 61402553　f E&E (86-21)64953679　www.sgsgroup.com.cn
中国·上海·徐汇区宜山路889号3号楼　邮编: 200233　t HL (86-21) 61402594　f HL (86-21)61156899　e sgs.china@sgs.com

Member of the SGS Group (SGS SA)

测试结果 :

测试样品描述 :

样品编号	SGS样品ID	描述
SN1	SHA21-087462.001	银色金属

备注 :

(1) 1 mg/kg = 0.0001%

(2) MDL = 方法检测限

(3) ND = 未检出 (< MDL)

(4) "-" = 未规定

镉(Cd),铅(Pb),汞(Hg),六价铬(Cr(VI))

测试方法 : 参考IEC 62321-4:2013+AMD1:2017， IEC 62321-5:2013和 IEC 62321-7-1:2015，采用ICP-OES和UV-Vis进行分析。

测试项目	限值	单位	MDL	*001*
镉 (Cd)	75	mg/kg	2	ND
铅(Pb)	600	mg/kg	2	11
汞 (Hg)	600	mg/kg	2	ND
六价铬(Cr(VI))▾	-	μg/cm²	0.10	ND

备注 :

(1) 最大允许限值来源于客户要求。
IEC 62321系列等同于 EN 62321系列
https://www.cenelec.eu/dyn/www/f?p=104:30:1742232870351101::::FSP_ORG_ID,FSP_LANG_ID:1258637,25

(2) ▾ = a. 当六价铬的浓度高于0.13 μg/cm²时，样品为阳性，即含有六价铬；
b. 当六价铬的浓度为ND(低于0.10 μg/cm²)时，样品为阴性，即未检测到六价铬；
c. 当六价铬的浓度介于0.10 μg/cm²与0.13 μg/cm²之间时，无法直接判定是否检测到六价铬，因不同个体的样品表面差异可能会影响测定结果；
由于未获知样品的存储条件和生产日期，样品的六价铬测试结果仅能代表测试时样品含六价铬的状态。
除非另有说明，此报告结果仅对测试的样品负责。本报告未经本公司书面许可，不可部分复制。
检测报告仅用于客户科研、教学、内部质量控制、产品研发等目的，仅供内部参考。

Unless otherwise agreed in writing, this document is issued by the Company subject to its General Conditions of Service printed overleaf, available on request or accessible at http://www.sgs.com/en/Terms-and-Conditions.aspx and, for electronic format documents, subject to Terms and Conditions for Electronic Documents at http://www.sgs.com/en/Terms-and-Conditions/Terms-e-Document.aspx. Attention is drawn to the limitation of liability, indemnification and jurisdiction issues defined therein. Any holder of this document is advised that information contained hereon reflects the Company's findings at the time of its intervention only and within the limits of Client's instructions, if any. The Company's sole responsibility is to its Client and this document does not exonerate parties to a transaction from exercising all their rights and obligations under the transaction documents. This document cannot be reproduced except in full, without prior written approval of the Company. Any unauthorized alteration, forgery or falsification of the content or appearance of this document is unlawful and offenders may be prosecuted to the fullest extent of the law. Unless otherwise stated the results shown in this test report refer only to the sample(s) tested .
Attention: To check the authenticity of testing /inspection report & certificate, please contact us at telephone: (86-755) 8307 1443, or email: CN.Doccheck@sgs.com
3rd Building,No.889 Yishan Road Xuhui District,Shanghai China 200233 t E&E (86-21) 61402553 f E&E (86-21)64953679 www.sgsgroup.com.cn
中国·上海·徐汇区宜山路889号3号楼 邮编: 200233 t HL (86-21) 61402594 f HL (86-21)61156899 e sgs.china@sgs.com
Member of the SGS Group (SGS SA)

附件

1.0， SH， SHD， 1.25， 51021， DF14， DF13， GH， ZH， PH， PHB， PA， PHSD， DF11， C1251， 51047， 51146， FI-S， PHD， YHD200， PA， SMP，SMW，SMH， SMH200， SMH200-H， YH200，20039WR， 杜邦2.0， XH/TJC3， XA， HA， XHB， XHD， XHE， EH， EI， 小四P， 5263， 5264，5267，5268， SZN， SAN， SCN， SCND， JC15， JC20， JC25， 5102， 5240， SMH250， SMP250， SMW250， 25048HS， 25045HP， SM， TJC8, 杜邦2.54， TJC8A，杜邦带锁， TJC8B， TJC8H， 5051，2510， 美尚美， 43640， 43645， 43020， 43025， 5500， 5600， VH， VHRR， YH396， VHR， 35156， 2139， 3.96， 90331， 5195， 5196， 39612， FL， 5557， 5559， 5566， 5569， SL，RV42， EL， YL， 小EL， 8981， 大四P， 5058， 5.08， L6.2， VL， VLP/VLR， TJC2， TJC2A， TJC2B， TJC4， TJC1， 1806， MX3.0， 1.58， 51005， 51006， BH3.5， BH4.0， 63080， 51004， TJC15， A4203， CL014， OTP， MKH， SMF， Cy-X201， 35108， 35150， 35151， 35224， 35180， 35965， 42021， 42022， 42002， 35955， SA， SCS， 35189， 35196， CH10， CH2.5， 543， SLP， SLR， YHL500， YWL500， FFC， FPC， 20030， 250， LGC， S11， YH025， 35155， 25415， 5197， 5198， 110， 2.8， 6.3， SCS

NH， XHQ， 42474， 42475， QH， NV， 50300， 50301， 5025， 3191， 5199， STV5， YHL500， YWL500， F001， F002， D440， D600， D620， D700， D220， D230， D250， D480， D520， D280， D630， D430， D400， D450， U-T， F1001-T， SIN-T， 774， 773， 778， 294， TU-JTK(SV)， TU(SNB)， TO-JTK(RV)， MDD， FDD， TG-JT， IDC， AUTO， CONNECTOR， DJ70， DT04， DT06， UY/K1， UY2/K2， UR/K3， UR2， UB/K4， UB2A， UG/K5， U1R/K8， U1B/K9， HJKT10， UDW2， 314， A5001， A5002， MC100， FPC2.54， SGN， PHR， ZHR， 205， 5.2， C1801， C1802， 2060， A5003， ME020， ME010， FPC/FFC， B2541， 1971845， 1971846， 2232043， 2232044， 2232511， 1971895， 1971896， JWPF， SY， Molex1.5， ME0100， RAST， A5004， DV， SJN， SDN， 35182， 35524， RCY， LC， VR， SHJ， SHL， DF19， ACH， IL-Z， SATA， XSR， SUR， SUH， ZE， ZND， ZPD， SFH， PUD， AMP2.0， 35507， DF3， PND， RE， RA， RF， SYP/SYR， HIF3， MC100/ME020/ME010， F2541， A5005， A5006， A5007， A2509， A25010， A25011， A25012， B13001， B76201， VHB， VHC， VHD

1969738, 1969740, 1971845, 1971846, 1971895, 1971896, 1971946 thru 1971949, 1971954 thru 1971957, 2232008 thru 2232011, 2232000 thru 2232003, 2232016 thru 2232019, 1971962 thru 1971965, 2232024 thru 2232027, 2232289 thru 2232292, 2232043 thru 2232074, 2232298 thru 2232301, 2232511, 2232532, 2232557, 2232559, 2232560, 2232562, 2232563, 2232565, 2232566, 2232568, 2232569, 2232571, 2232572, 2232574, 2232575, 2232577, 2232578, 2232580, 2232581, 2232583, 2232584, 2232586, 2232587, 2232589, 2232590, 2232592, 2232593, 2232595, 2232596, 2232598, 2232599, 2232601, 2232602, 2232604, 2232605, 2232607, 2232608, 2232611 thru 2232682, 2292457, 2292458,

Unless otherwise agreed in writing, this document is issued by the Company subject to its General Conditions of Service printed overleaf, available on request or accessible at http://www.sgs.com/en/Terms-and-Conditions.aspx and, for electronic format documents, subject to Terms and Conditions for Electronic Documents at http://www.sgs.com/en/Terms-and-Conditions/Terms-e-Document.aspx. Attention is drawn to the limitation of liability, indemnification and jurisdiction issues defined therein. Any holder of this document is advised that information contained hereon reflects the Company's findings at the time of its intervention only and within the limits of Client's instructions, if any. The Company's sole responsibility is to its Client and this document does not exonerate parties to a transaction from exercising all their rights and obligations under the transaction documents. This document cannot be reproduced except in full, without prior written approval of the Company. Any unauthorized alteration, forgery or falsification of the content or appearance of this document is unlawful and offenders may be prosecuted to the fullest extent of the law. Unless otherwise stated the results shown in this test report refer only to the sample(s) tested .
Attention: To check the authenticity of testing /inspection report & certificate, please contact us at telephone: (86-755) 8307 1443, or email: CN.Doccheck@sgs.com
3rd Building,No.889 Yishan Road Xuhui District,Shanghai China 200233 t E&E (86-21) 61402553 f E&E (86-21)64953679 www.sgsgroup.com.cn
中国·上海·徐汇区宜山路889号3号楼 邮编: 200233 t HL (86-21) 61402594 f HL (86-21)61156899 e sgs.china@sgs.com
Member of the SGS Group (SGS SA)

附件

元素(IEC62321) 测试流程图

1)样品按照下述流程被完全消解

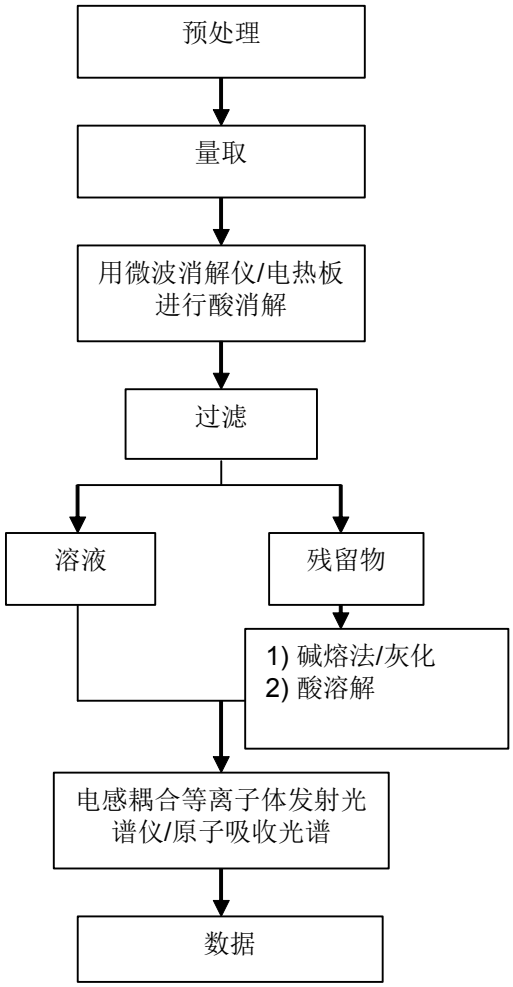

Unless otherwise agreed in writing, this document is issued by the Company subject to its General Conditions of Service printed overleaf, available on request or accessible at http://www.sgs.com/en/Terms-and-Conditions.aspx and, for electronic format documents, subject to Terms and Conditions for Electronic Documents at http://www.sgs.com/en/Terms-and-Conditions/Terms-e-Document.aspx. Attention is drawn to the limitation of liability, indemnification and jurisdiction issues defined therein. Any holder of this document is advised that information contained hereon reflects the Company's findings at the time of its intervention only and within the limits of Client's instructions, if any. The Company's sole responsibility is to its Client and this document does not exonerate parties to a transaction from exercising all their rights and obligations under the transaction documents. This document cannot be reproduced except in full, without prior written approval of the Company. Any unauthorized alteration, forgery or falsification of the content or appearance of this document is unlawful and offenders may be prosecuted to the fullest extent of the law. Unless otherwise stated the results shown in this test report refer only to the sample(s) tested .
Attention: To check the authenticity of testing /inspection report & certificate, please contact us at telephone: (86-755) 8307 1443, or email: CN.Doccheck@sgs.com
3rd Building,No.889 Yishan Road Xuhui District,Shanghai China 200233 t E&E (86-21) 61402553 f E&E (86-21)64953679 www.sgsgroup.com.cn
中国·上海·徐汇区宜山路889号3号楼 邮编: 200233 t HL (86-21) 61402594 f HL (86-21)61156899 e sgs.china@sgs.com
Member of the SGS Group (SGS SA)

附件

六价铬测试流程图

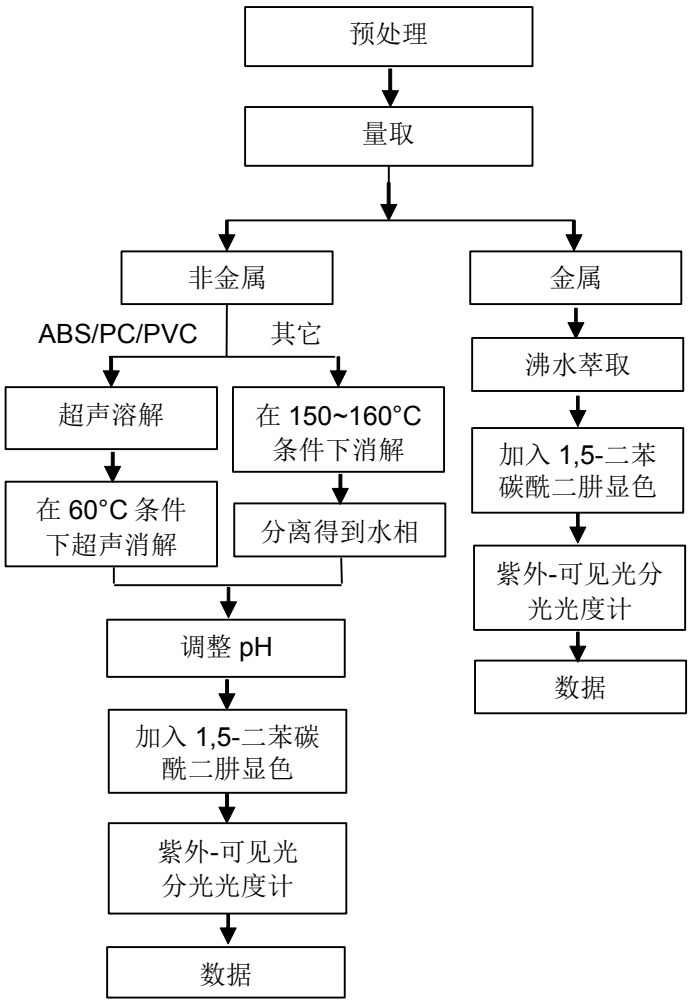

Unless otherwise agreed in writing, this document is issued by the Company subject to its General Conditions of Service printed overleaf, available on request or accessible at http://www.sgs.com/en/Terms-and-Conditions.aspx and, for electronic format documents, subject to Terms and Conditions for Electronic Documents at http://www.sgs.com/en/Terms-and-Conditions/Terms-e-Document.aspx. Attention is drawn to the limitation of liability, indemnification and jurisdiction issues defined therein. Any holder of this document is advised that information contained hereon reflects the Company's findings at the time of its intervention only and within the limits of Client's instructions, if any. The Company's sole responsibility is to its Client and this document does not exonerate parties to a transaction from exercising all their rights and obligations under the transaction documents. This document cannot be reproduced except in full, without prior written approval of the Company. Any unauthorized alteration, forgery or falsification of the content or appearance of this document is unlawful and offenders may be prosecuted to the fullest extent of the law. Unless otherwise stated the results shown in this test report refer only to the sample(s) tested .
Attention: To check the authenticity of testing /inspection report & certificate, please contact us at telephone: (86-755) 8307 1443, or email: CN.Doccheck@sgs.com
3rd Building,No.889 Yishan Road Xuhui District,Shanghai China 200233 t E&E (86-21) 61402553 f E&E (86-21)64953679 www.sgsgroup.com.cn
中国·上海·徐汇区宜山路889号3号楼 邮编: 200233 t HL (86-21) 61402594 f HL (86-21)61156899 e sgs.china@sgs.com
Member of the SGS Group (SGS SA)

样品照片:

SHA21-087462.001

此照片仅限于随SGS正本报告使用

*** 报告完 ***

Unless otherwise agreed in writing, this document is issued by the Company subject to its General Conditions of Service printed overleaf, available on request or accessible at http://www.sgs.com/en/Terms-and-Conditions.aspx and, for electronic format documents, subject to Terms and Conditions for Electronic Documents at http://www.sgs.com/en/Terms-and-Conditions/Terms-e-Document.aspx. Attention is drawn to the limitation of liability, indemnification and jurisdiction issues defined therein. Any holder of this document is advised that information contained hereon reflects the Company's findings at the time of its intervention only and within the limits of Client's instructions, if any. The Company's sole responsibility is to its Client and this document does not exonerate parties to a transaction from exercising all their rights and obligations under the transaction documents. This document cannot be reproduced except in full, without prior written approval of the Company. Any unauthorized alteration, forgery or falsification of the content or appearance of this document is unlawful and offenders may be prosecuted to the fullest extent of the law. Unless otherwise stated the results shown in this test report refer only to the sample(s) tested .
Attention: To check the authenticity of testing /inspection report & certificate, please contact us at telephone: (86-755) 8307 1443, or email: CN.Doccheck@sgs.com

3/4F Building,No.889 Yishan Road Xuhui District,Shanghai China 200233 t E&E (86-21) 61402553 f E&E (86-21)64953679 www.sgsgroup.com.cn
中国·上海·徐汇区宜山路889号3号楼 邮编: 200233 t HL (86-21) 61402594 f HL (86-21)61156899 e sgs.china@sgs.com

Member of the SGS Group (SGS SA)

物質安全資料表

一、物品與廠商資料

物品名稱：CCP PBT 複合材料
其他名稱：1000, 2000,3000,4000,5000,6000,7000,8000系列
建議用途及限制使用：
製造商或供應商名稱、地址及電話：長春人造樹酯廠股份有限公司/台北市松江路301號7樓 /(02)25001800
緊急聯絡電話/傳真電話：(07)3711301/(07)3710819

二、危害辨識資料

物品危害分類：NA
標示內容：NA 象徵符號： 警 示 語： 危害警告訊息：無 危害防範措拖：無
其他危害：

三、成分辨識資料

混合物	
化學性質	
危害物質成分之中英文名稱	濃度或濃度範圍（成分百分比）
Polybutylene Terephthalate	40～99
Glass Fiber	10～50
Additives	0.4～40

四、急救措施

不同暴露途徑之急救方法： • 吸入： 當吸入加熱所產生之氣體時，應立即移至通風良好之處，如有必要則送醫治療。 • 皮膚接觸： 若被高溫的液體產物濺到皮膚，應立即沖水，冷卻後變硬之固體不可從傷處任意移走，經一段時間後會自行脫落，若情況危急應送醫治療。 • 眼睛接觸： 若被高溫的液體產物濺到眼睛，立即送醫並以大量的冷水沖洗。 • 食入： 無
最重要症狀及危害效應：無
對急救人員之防護：無
對醫師之提示：無

五、滅火措施

適用滅火劑：水、乾粉、泡沫、二氧化碳
滅火時可能遭遇之特殊危害：無
特殊滅火程序：依B級火災處理
消防人員之特殊防護設備：穿著個人防護裝備

六、洩漏處理方法

個人應注意事項：處理時應穿著個人防護裝備
環境注意事項：包裝袋洩露會造成環境污染

清理方法：直接以掃帚清理作爲回收料使用

七、安全處置與儲存方法

處置：作業時配戴防護手套,及防塵口罩,避免粉塵由口鼻吸入
儲存：應存放於乾燥及通風良好之處

八、暴露預防措施

工程控制：ND			
控制參數			
八小時日時量平均 容許濃度 TWA	短時間時量平均 容許濃度 STEL	最高容許 濃度 CEILING	生物指標
依無毒粉塵標準 8HR 容許量 10mg/m3			ND
個人防護設備： • 呼吸防護：防粉塵用防護面罩 • 手部防護：隔熱手套 • 眼睛防護：安全防護鏡 • 皮膚及身體防護：長袖工作服及安全鞋			
衛生措施：工作後應徹底洗淨雙手			

九、物理及化學性質

外觀： 固體	氣味：無臭
嗅覺閾值：	熔點：225℃
Ph值：ND	沸點/沸點範圍：>350
易燃性(固體,氣體)：	閃火點：>355 ℃
分解溫度：>300℃	測試方法：
自燃溫度：>420℃	爆炸界限：無可獲得的數據
蒸氣壓：ND	蒸氣密度：ND
密度： 1.3-1.7	溶解度： 不溶於水
辛醇／水分配係數(log Kow)：ND	揮發速率：ND

十、安定性及反應性

安定性：安定
特殊狀況下可能之危害反應： 粉塵危害
應避免之狀況：加熱至300℃以上
應避免之物質：強鹼,強氧化劑
危害分解物： ND

十一、毒性資料

暴露途徑：無
症狀：無
急毒性：無
慢毒性或長期毒性：無

十二、生態資料

生態毒性：NA
持久性及降解性：持久性

生物蓄積性：NA
土壤中之流動性：NA
其他不良效應：NA

十三、廢棄處置方法

廢棄處置方法：PBT複合材料料頭外售,交由回收料廠商粉碎回收

十四、運送資料

聯合國編號： Not regulated
聯合國運輸名稱：Not regulated
運輸危害分類：Not regulated
包裝類別：SEA BULK,太空包,紙袋
海洋污染物（是／否）：否
特殊運送方法及注意事項：運送過程保持貨品乾燥

十五、法規資料

適用法規：Not regulated

十六、其他資料

參考文獻		
製表單位	名稱：長春人造樹脂廠股份有限公司高雄廠	
	地址/電話：高雄縣仁武鄉仁武村工業一路14號/(07)3711301	
製表人	職稱：副課長	姓名：吳福利
製表日期	2008/09/16 04:35:39 PM	修改日期 ：2008/09/16 04:35:39 PM
備註		

编号：LHES006

MSDS

1．物品成分与厂商资料	
厂商名称：浙江联和电子有限公司	物品编号：QSN6.5-0.1
	物品名称：磷铜端子
	纯物质：
	危害物质成分（%）无

2.成份辨识资料

成份名称	化学文摘社登记号码(CAS No.)	浓度范围（成分百分比 Percentage (%)
铜(Cu)	7440-50-8	余量
磷(P)	7723-14-0	0.0026-0.005%
锌(Zn)	7440-66-6	0.03-0.04%
镍(Ni)	7440-02-0	0.054-0.063%
锑（Sb）	7440-36-0	0.00015%
铅(Pb)	7439-92-1	＜0.005%
铁(Fe)	7439-89-6	0.005-0.0059%
纯镍(Ni)	7440-02-0	0.054-0.063%
纯锡(Sn)	7440-31-5	6.2 %

2．危害辨认资料	
严重危害效应	健康危害效应：本产品在固体时不具健康危害及危害
	环境影响：本产品在固体时对环境不具影响
	物理性及化学性危害:固体/无味/多色
	特殊危害：固体时（防火或高温）无特殊危害
主要症状：无	

3．急救措施	
急救方法	吸入：无吸入
	皮肤接触：接触无危害
	食入：无食入
主要症状及危害效应：无	

4．灭火措施
通用灭火器：二氧化碳，泡沫，干粉化学灭火器，水雾等
灭火时可能遭遇之特殊危害：会引起火灾
消防人员之特殊防护装备：使用从氧式吸防护具

5．泄漏处理方法
个人应注意事项：注意工作台面清洁，作业时及时清洗手
环境注意事项：将泄漏之物料以容器盛装以便回收或废弃
清理方式：工作台面每天作业前/后须檫试干净，建议可以戴手套或手指套作业

6．安全处置与储存方法
处置：废弃物可送到政府许可的废弃物处理中心进行处理

储存：空调仓，23±5℃，湿度 65%以下，仓库里面安装灭火器	
7. 暴露预防措施	
个人防护设备	呼吸防护：口罩，一般无此要求，可以建议采用
	手部防护设备：手套火手指套，一般无此要求，可以建议采用
	眼睛防护：安全目镜或眼镜
	皮肤及身体防护：穿工作服，经常勤洗
卫生措施：建议使用安全目镜，进食前应洗手及脸部，平时多运动，保持健康体力	
8. 物料及化学性质	
物质状态：固体	形状：连接器
颜色：多色	气味：无味
PH 值：未测定	沸点：未测定
分解温度：未测定	爆炸介限：无
自然温度：固体无	溶解度：固体无
9. 安全性及反应性	
安全性：正常状态下安全	
特殊状况下可能之危害反应：无	
应避免之状况：避免接触火源和太阳光直照射	
应避免之物质：火和酸碱性物质	
危害分解物：无	
10. 毒性资料	
急毒性	吸人：无
	皮肤接触：无
	眼睛：无
局部效应：无	特殊效应：无
11. 废弃物处理方法：废弃物可送到政府许可的废弃物处理中心进行处理	
12. 运送资料	
联合国编号：无	运输规定：并无危险分类
运送方法及注意事项：勿重压，轻拿轻放	
13. 适用法规：1.劳工安全卫生设施规划；2.危害物及有害物通讯规划；3.索尼环境通用规定；4 劳工用业环境空气中有害物容许溶度标准；5 道路交通安全规划	
14. 其他资料：	
15.法规资料	
适用法规	1.劳工安全卫生设施规则 2.RoHS 法规及有害物通识规则
16.其它资料	
参考文献	有害化学物质中文资料库，环保局
制表单位	浙江联和电子有限公司
制造商及供应商地址	浙江省乐清市石帆镇后屿工业区
电话	0577-62383699
制表者	季育文
制表日期	2012-3-23

反馈与建议：