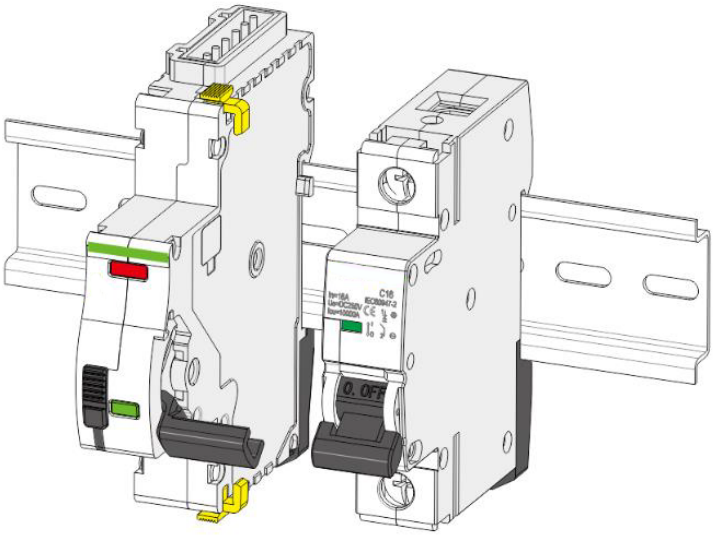

G R D 9 L - W I remote control device -RCD instruction manual

Document version v1.0

Release date 2022/11/02

1 Product Introduction

1.1 Product Overview

The control module of GRD9L-WI series remote control device can match 1P-4P AC/DC circuit breaker, realize remote control through external dry contact, and feedback on the reclosing state through the signal output port.

The LED red light indicates that the device is in normal use under the closing state. The green LED light indicates that the equipment is in the open state, and the red flashing LED indicates that the equipment is in fault or manual opening enters the maintenance mode.

Automatic control mode, maintenance mode and padlock mode can be selected through the toggle switch on the control module panel.

1.2 Specification and type description

GRD9L	-wi		-	MCB	2P
Equipment type	Function code	Supply voltage		Adaptive circuit breaker	Pole
Recloser	wifi	AC: AC~230V		GEYA: MCB (GYM9) CHINT: NB1 LAZZEN: NDB2 Schneider: IC65N	

GEYA CIRCUIT BREAKER	Type	MCB	RCCB (AC)	RCBO (AC)
	Pole	1P、2P、3P、4P	2P、4P	1P、1P+N、2P、3P、3P+N、4P
	Buckle curve	B、C、D	B、C、D	B、C、D
	Rated current	10、16、20、25、32、40、50、63、80、100、125	10、16、20、25、32、40、50、63	10、16、20、25、32、40、50、63

1.3 Appearance description

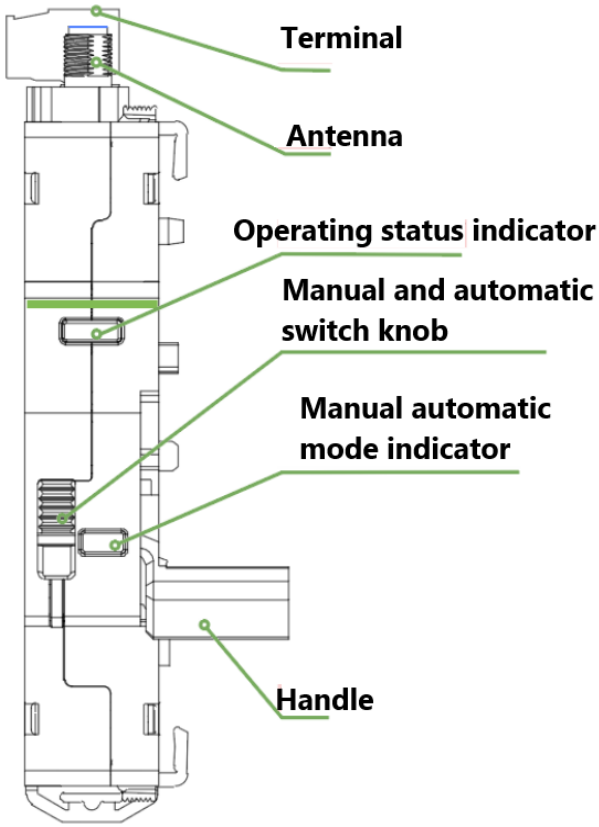

Operating status indicator	
The green light is always on	Close
Slow flashing of green light	WLAN transmits data normally (in wifi distribution network mode)
The red light is always on	Close
Slow flashing of red light	WLAN transmits data normally (in wifi distribution network)

Features

- Ultra small volume: the minimum width is only 18mm, which is reduced by more than 1/2 compared with similar products at home and abroad;
- Good compatibility: modular design, can assemble various miniature circuit breakers from many manufacturers Device;
- Reliable performance: the mechanical life is up to 20000 times, more than double that of domestic and foreign products;
- Fast action: compared with similar products at home and abroad, the speed is more than double;
- Multiple working modes: the mode selection switch can be selected between manual and automatic operation modes to physically lock the reclosing device;
- Double fulcrum parallel drive, effectively ensuring reliable synchronous closing of 3P and above circuit breakers;
- Good adaptability: rail-mounted side;
- Energy conservation and environmental protection: low power consumption; All of them are made of environment-friendly materials, meeting RoHS requirements;
- Strong expansibility: RS485 communication, dry contact control and opening/closing status feedback can be added.

Safety lock push button

Table 1-2 Pushbutton Description

Name	Color	Status&Description
Operating mode indication (safety lock push button)	Auto	Auto:Automatic mode (remote control mode)
	Manu	Manu:Manual mode
	Lock	Lock:Mechanical lock mode (padlock is required in this mode)

2 Equipment Installation

2.1 Installation Instructions

⚠警告

- GRD9L-WI series remote control device must be installed by professional electricians.
- The equipment manufacturer shall not be responsible for any damage caused by the user or installer's failure to comply with the warnings or recommendations in this manual, or by the use of non-original products or accessories, or by the quality of the product itself

⚠危险

- During line maintenance or fault maintenance at the load end, the working mode of the equipment must first be switched to the mechanical lock state and padlock at the safety lock position, so as to ensure the safety of maintenance personnel.
- After the safety lock is pulled out, the device will enter the logic self-locking state, and the system will automatically constrain the handle to the opening position

2.2 Fxing

The GRD9L-WI Series Remote Control Unit Control module is specifically designed to be installed in distribution boxes or cabinets with DIN rail mounting elements.

1. Assemble the circuit breaker and reclosing control module through accessories. (If you purchase complete sets of equipment, please ignore this step)

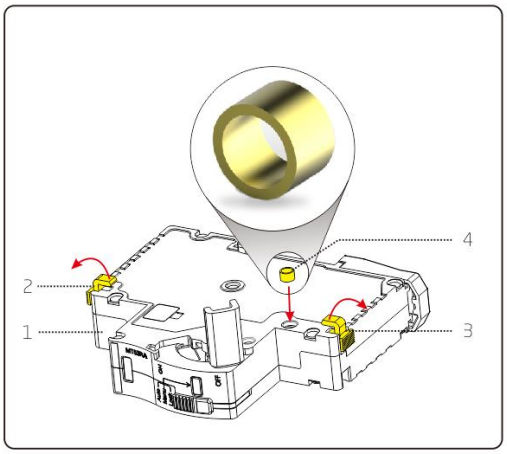

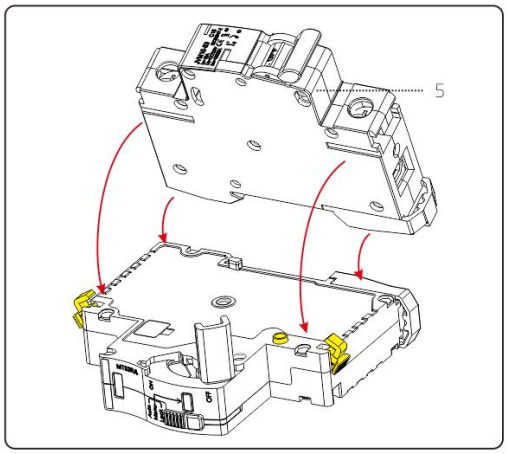

①Place the actuator flat on a flat surface

②Disconnect part of buckle 2 and buckle 3

③Install the copper pipe at the position shown in the figure

④Assemble circuit breaker 5 onto actuator 1

⑤Push buckle 2 and buckle 3 back to their original positions

2. Lift out the rail buckle at the bottom of the equipment and hang the equipment on the DIN rail;

3. Rotate the device downward until it is fixed to the lower part of the DIN rail, and reset the snap at the bottom of the device.。

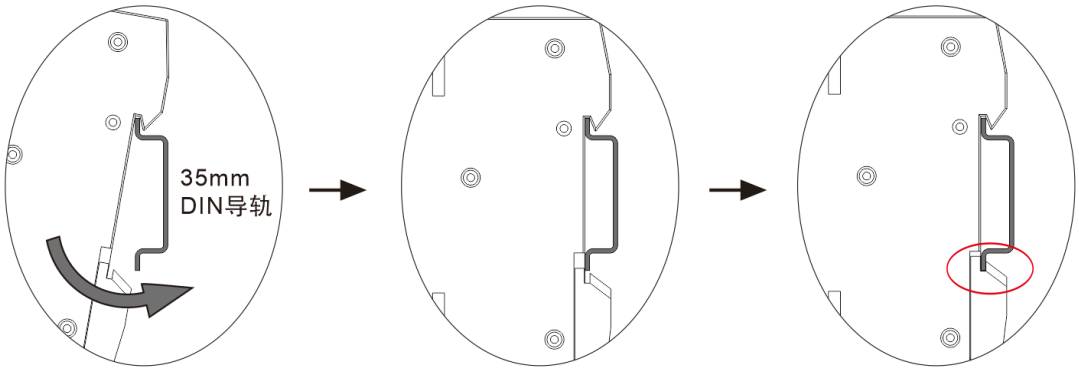

4. Make sure it is fixed on the guide rail.

2.3 Main circuit wiring instructions

The circuit breaker module of GRD9L-WI series remote control device must be connected to the power circuit according to its voltage range.

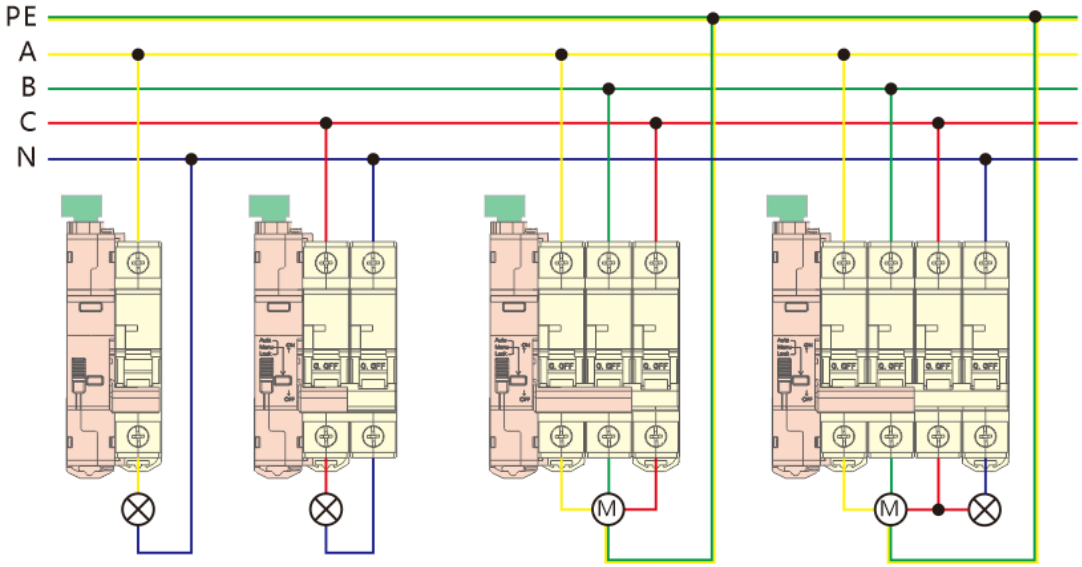

2.4 Terminal and wiring instructions

The control module of GRD9L-WI series remote control device must be connected to the power circuit according to its voltage range.0

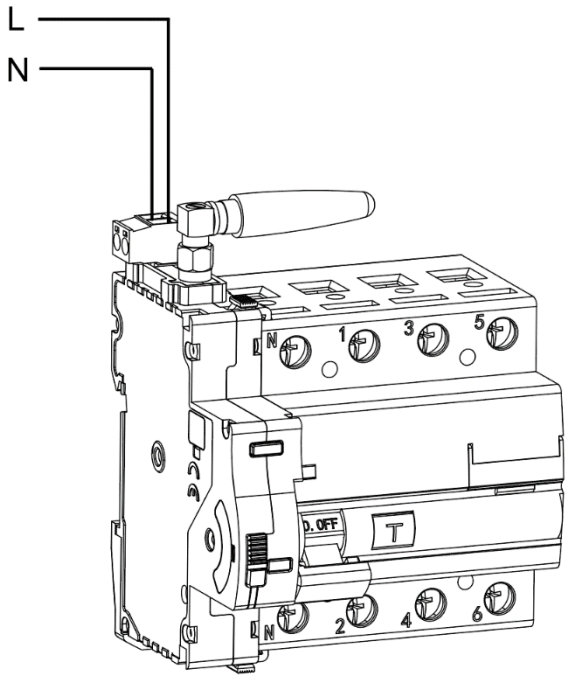

3 Equipment Use

3.1 Mode of equipment

- Auto mode: This mode is used for remote control and timing control after the device is connected to the network
- Manu mode: this mode is used for manual opening and closing of equipment
- Lock mode: This mode is used to troubleshoot the circuit after locking the device when there is a fault in the circuit

3.2 Equipment configuration②

3.2.1 Configuration steps

1. First download the "tuya" APP
2. Enter the "tuya" APP and click Add Device
3. Manually and quickly switch the Auto-Lock mode up and down for three times to make the equipment in the distribution network mode (the red light flashes)
4. Click Add Device, select the WIFI to be connected, and click Next
5. Wait for the device to connect successfully

3.2.2 Configuration logic diagram

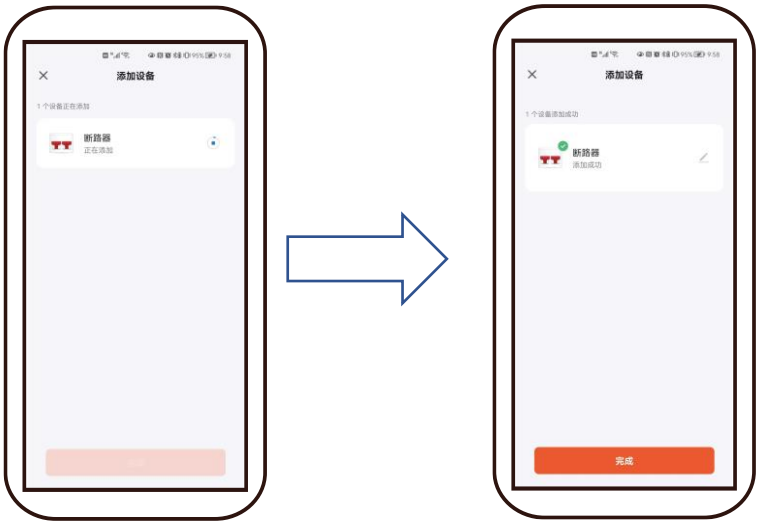

3.2.3 In-application operation instructions

4 Technical characteristics

4.1 Technical parameter table

Picture	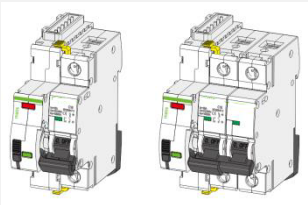	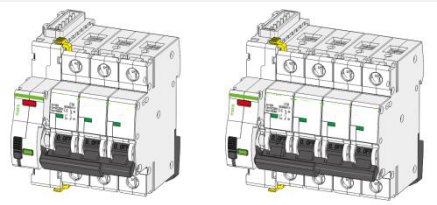
Function Description		
Manual/automatic switching	●	●
Switch safety padlock	●	●
Switch status indication	●	●

Poles of adaptive circuit breaker	1P、2P	3P、4P
Electrical characteristics		
Adapted circuit breaker frame current (A)	63A 125A	
Rated voltage (Un)	AC~230V	
Rated insulation voltage (Ui)	300V	
Rated frequency	50Hz 60Hz	
Standby power	≤ 1.2W	
Mechanical properties		
Opening time	0.1s	
Closing time	0.2s	
Mechanical life	20000	
Weight	88g	89g
Modulus	18mm	18mm
Environmental characteristics		
Working temperature	-25℃~+55℃	
Storage temperature	-35℃~+65℃	
Relative humidity (non condensing)	5%-95%	
Maximum altitude	2000 m	
Protection grade	IP20	

4.2 Overall dimension

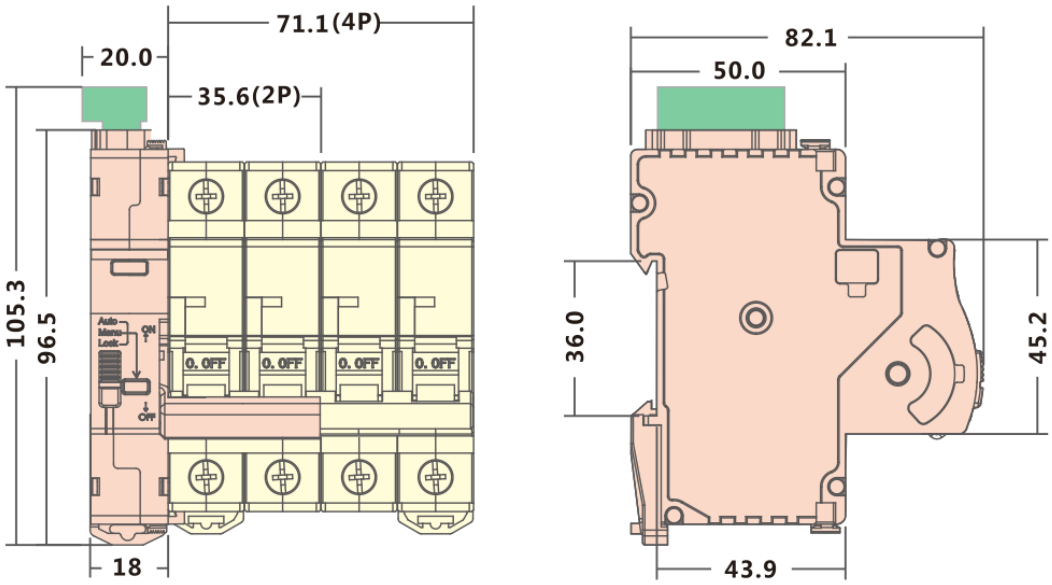

5 Common Problem

Problem performance	Possible causes	Terms of settlement
No automatic closing	In Auto mode, the reclosing function is disabled	Set the reclosing power to enable through the upper computer software
	Working mode setting error	Turn the working mode push button to Auto mode
	Reclosing failed and entered the logic locking state	Control closing through upper computer software, or manually close once
Send opening/ closing command, no response	Wrong gear setting of safety lock push button	Please ensure that the indication of the safety lock push button is in the "Auto" position
	Abnormal communication line	Check whether the communication cable is disconnected
position machine cannot communicate with this product	RS485 communication address is incorrect	Check whether the device address is consistent with the definition
	RS485 baud rate is incorrect	Check whether the device communication rate is consistent with the definition
	RS485 bus is long and terminal adapter is not used Resistance and current signal reflection cause interference to the bus	Check whether the 120 Ω resistance is applied
	Communication link is disturbed	Check whether the communication shielding layer is well grounded
	Abnormal communication line	Check whether the communication cable is disconnected

6 Technical Service

Users who purchase the GRD9L-WI remote control device of this model enjoy a warranty period of 24 months from the date of purchase. During the warranty period, if the normal use of the product is affected by its quality problem, it can enjoy free repair and replacement. In case of irrecoverable damage caused by improper use, falling, incorrect installation, and wiring, it can be repaired or replaced with compensation within the warranty period. If you dismantle and refit it by yourself, you will not enjoy the warranty service.

If you have any questions about the operation or failure of the equipment, please contact GEYA Technical Support Service.

Statement:

- The information provided in this manual can be modified without prior notice.
- Geya Electric Co., Ltd. reserves the right to interpret the information.