MCB / RCCB with RS485 interface

Instruction Manual

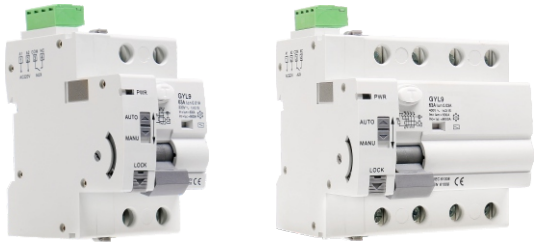

General

■Applications

-Can be widely used in power grid terminal line, such as meter box, new energy circuit management, PV solar control box, smart electricity, smart home, new energy vehicle charging pile, and so on.

■Function Features

-Can be matched with MCB/RCCB,remote switching and splitting of MCB/RCCB.
-Remote monitoring and control of MCB/RCCB through RS485 interface.
-With manual / automatic selector switch.
-With mechanical / electronic double locking function.
-The shaft transmission mode is more stable and reliable.
-Can match other accessories.
- Work status is indicated by LED.
- 1-MODULE.

■Model and connotation

GRD9L − S / □

- Rated control supply voltage:
  - D12:DC12V
  - D48:DC24V-48V
  - A220:AC220V
- Control through RS485 interface
- GRD9L Series

Note: The matching MCB / RCCB specification and model shall be indicated when ordering.
Example 1: GRD9L-S + GYM9 2P C40
Example 2: GRD9L-S + GYL9 2P 40A 30M

Technical parameters

Technical parameters	GRD9L-S
Control mode	RS485
Supply terminals	A1-A2
Voltage range	DC12V,DC24V-48V
Power input	DC max.1W(standby) max.20W(action)
Voltage range	AC 220V(50-60Hz)
Supply voltage tolerance	-10%;+10%
Power input	AC max.1VA(standby) max.20VA(action)
Supply voltage tolerance	-10%;+10%
Supply indication	red LED
Action time	≤1s
Communication protocol	MODBUS-RTU
Mechanical life	10000
Electrical life(AC1)	4000
Operating temperature	-20℃ to +55℃ (-4℉ to 131℉)
Storage temperature	-35℃ to +75℃ (-22℉ to 158℉)
Mounting/DIN rail	Din rail EN/IEC 60715
Protection degree	IP20
Operating position	any
Overvoltage cathegory	III.
Pollution degree	2
Max.cable size(mm^2)	solid wire max.1×2. 5or 2×1. 5/with sleeve max.1×2. 5(AWG 12)
Dimensions	82×18×78mm
Weight	80g

Panel Diagram

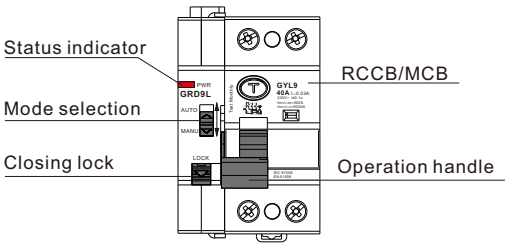

Wiring Diagram

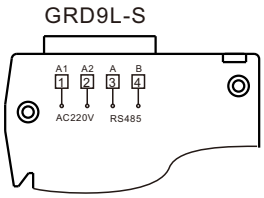

Combination with accessories

Auxillary contact	Yes
Alarm contact	Yes
Shunt release	Yes
Under voltage release	Yes

Installation and use

Cooperate with RCCB

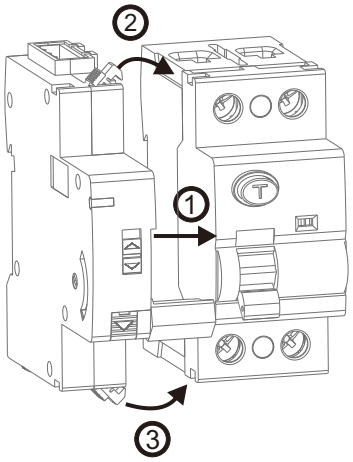

Cooperate with MCB

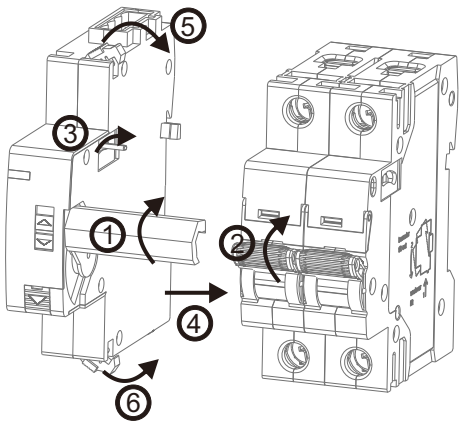

Closing lock

Note: When checking the circuit, the RCCB/MCB can not close when the lock function is activated.

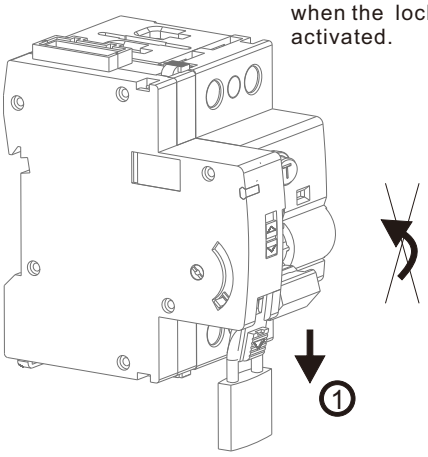

Accessories installing

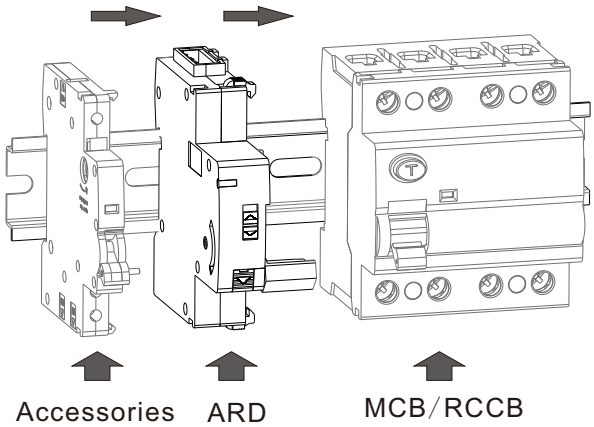

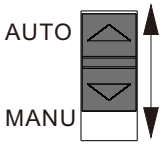

When in AUTO mode, closing and opening commands can be sent through RS485 interface.

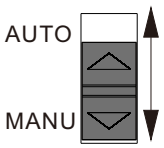

When in MANU mode, sending closing and opening commands through Rs485 interface will be invalid.

When the power is on, the green light will flash for 2 seconds to wait for the power supply to be stable, and the green light will be on normally during normal operation. If the trip fault occurs, the indicator light will turn red.

Functions diagram

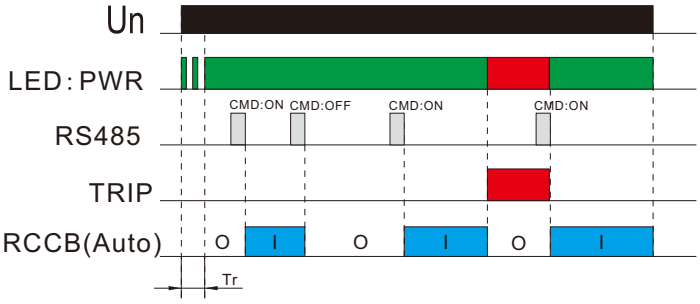

Tr:Power up delay=2s.

Note: If you need a communication protocol, please contact us.

Examples of application

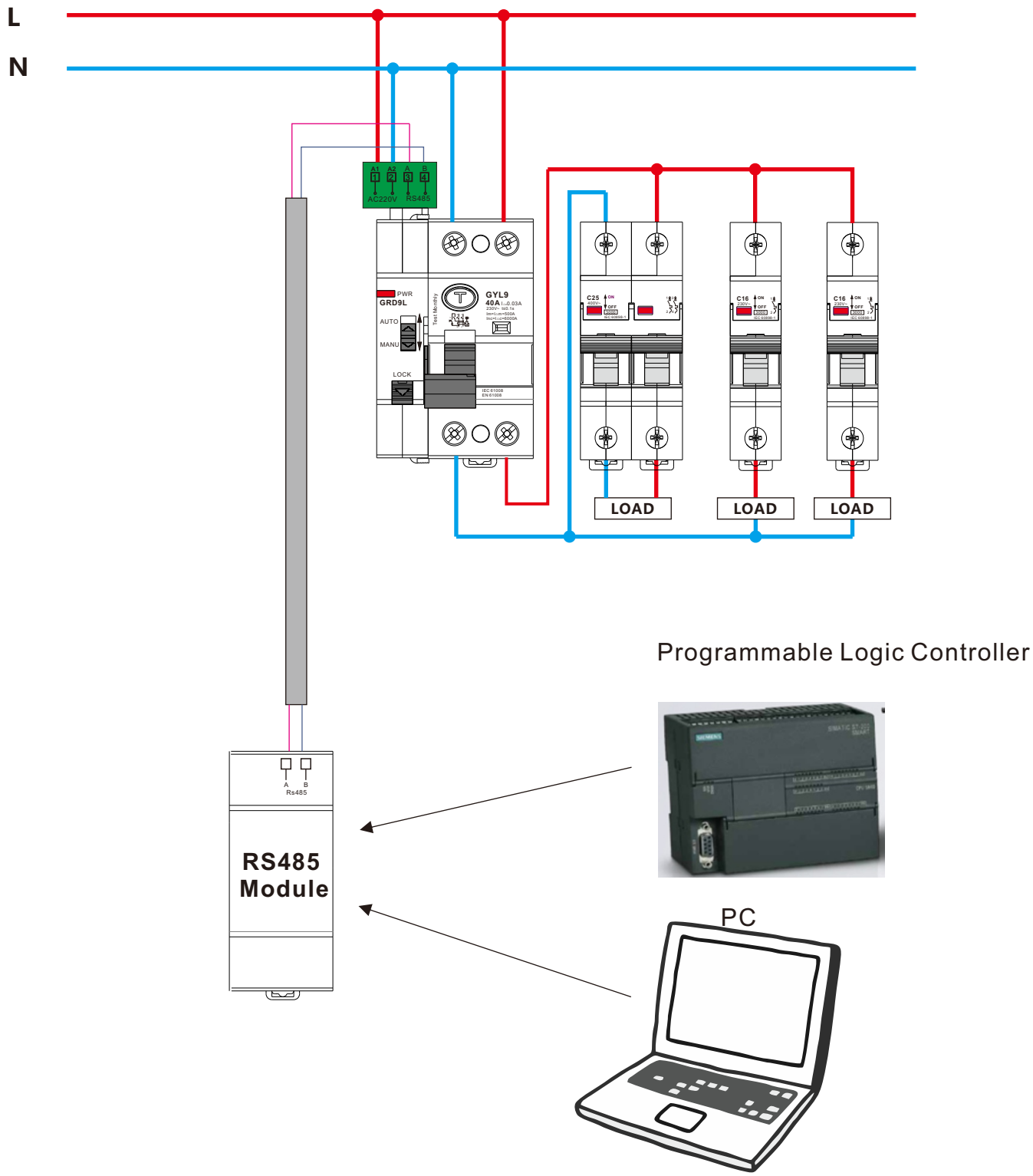

Common faults

Fault description		Resolvent
1	Unable to close or open.	1、Please confirm whether the power supply voltage is normal. 2、Please confirm whether the working mode is set in AUTO mode. 3、Please confirm the buckle of the electric operation mechanism and MCB / RCCB.
2	Trip immediately after closing.	1、Please check the circuit to confirm whether there is overload / short circuit / leakage fault at the lower end of MCB / RCCB. 2、Whether the circuit breaker is damaged or not, and whether it is slipped.

Dimensions(mm)

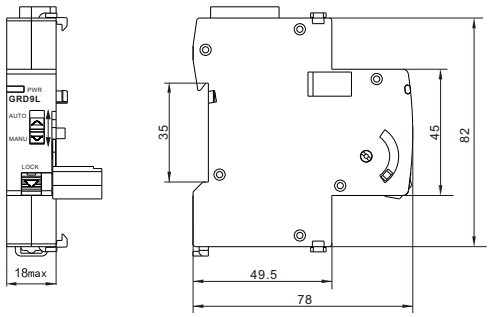

GRD9L+GYL9 2P

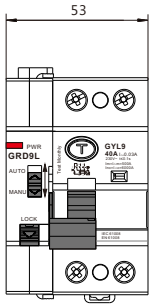

GRD9L+GYL9 4P

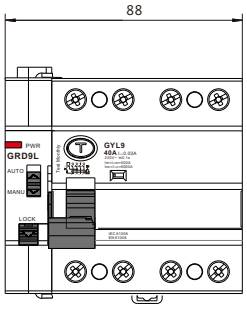

GRD9L+GYM9 1P

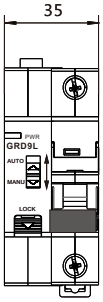

GRD9L+GYM9 2P

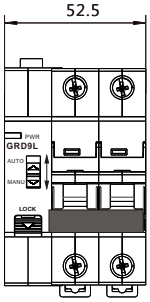

GRD9L+GYM9 3P

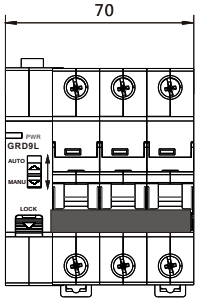

GRD9L+GYM9 4P

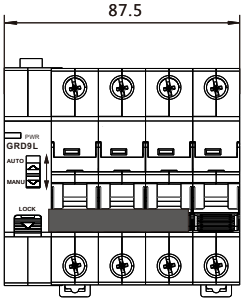

Disposal of Electrical Waste
All electrical waste should be disposed of in compliance with current WEEE regulations.

Caution
The products must be installed by qualified electricians. All and any electrical connections of the product shall comply with the appropriate safety standards.