GEYA®

Staircase switch GRT8-LS

Instruction Manual

GEYA ELECTRICAL CO.,LTD
Add:Wenzhou Brige Industrial Zone,Beibaixiang Town, Yueqing,Zhejiang,China 325603
Tel:0086-577-62771036
Fax:0086-577-62711079
E-mail:sale@cnyeya.com
Web:www.geya.net

General

■Applications
-It is used for delayed switching of lights in the corridors, entrances, stairways, halls or for delayed fi nish of fans (WC, bathroom, etc.).

■Function Features
-Operating system switch:
ON - output is constantly ON .
AUTO - timing according to adjusting by potentiometer in range 0.5 - 20 min
OFF - output is constantly OFF.
-Voltage range: AC 230 V, clamp terminals.
- Relay status is indicated by LED.
- 1-MODULE,DIN rail mounting.

■Model and connotation

GRT8 –LS / □

- Rated control supply voltage: A230:AC230V
- Stairase Switch
- GRT8 Series

Technical parameters

Technical parameters	GRT8-LS
Function	delay off reacting to contact switching
Supply terminals	L-N
Voltage range	AC 230V(50-60Hz)
Power input	AC max.6VA/1.3W
Supply voltage tolerance	-15%;+10%
Supply indication	green LED
Time ranges	AUTO:0.5s-20min ON OFF
Time setting	potentionmeter
Time deviation	10%-mechanical setting
Repeat accuracy	0.2%-set value stability
Mininum power time	200ms
Glow tubes connetions	Yes(N-3 or L-3)
Max.amount of glow lamps	230V,max.75pcs(Measured with glow lamp 0.68mA/230V AC)
Temperature coecient	0.05%/℃,at=20℃(0.05%℉ , at=68℉)
Output	1×SPST
Current rating	16A/AC1
Switching voltage	250VAC/24VDC
Min.breaking capacity DC	500mW
Output indication	red LED
Mechanical life	1×10^7
Electrical life(AC1)	1×10^5
Reset time	max.200ms
Operating temperature	-20℃ to +55℃ (-4℉ to 131℉)
Storage temperature	-35℃ to +75℃ (-22℉ to 158℉)
Mounting/DIN rail	Din rail EN/IEC 60715
Protection degree	IP40 for front panel/IP20 terminals
Operating position	any
Overvoltage cathegory	III.
Pollution degree	2
Max.cable size(mm^2)	solid wire max.1×2. 5or 2×1. 5/with sleeve max.1×2. 5(AWG 12)
Tightening torque	0.8Nm
Dimensions	90×18×64mm
Weight	61g
Standards	EN 61812-1,IEC 60669-2-3,IEC60947-5-1

Panel Diagram

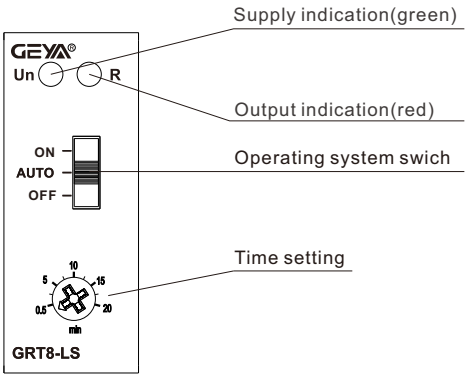

Functions Diagram

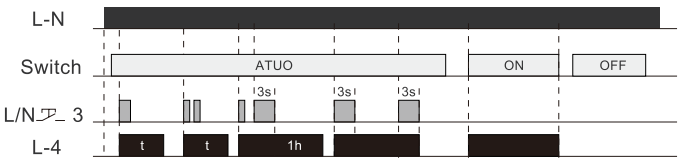

Wiring Diagram

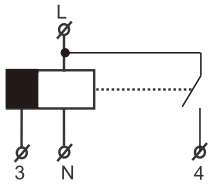

3-wire connection

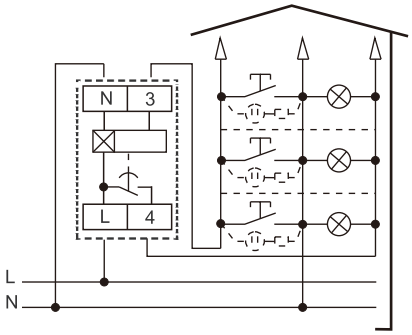

4-wire connection

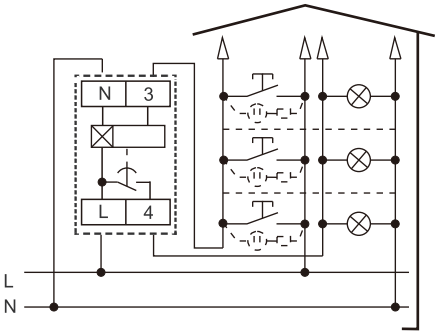

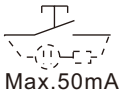

Max.50mA

Example

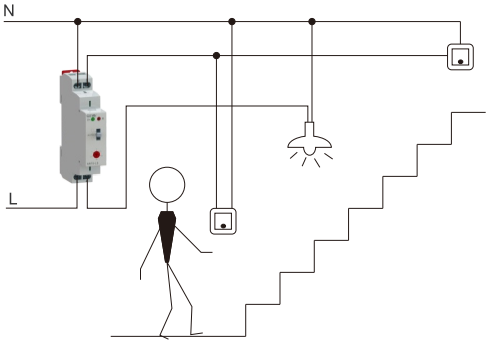

Types of lamps

2000W	2000W	1000W	900W(125uF)	400W	300W

Dimensions(mm)

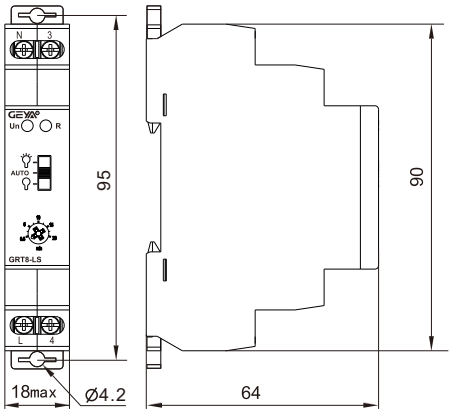

Disposal of Electrical Waste
All electrical waste should be disposed of in compliance with current WEEE regulations.

Caution
The products must be installed by qualified electricians. All and any electrical connections of the product shall comply with the appropriate safety standards.

http://www.geya.net