GEYA®

Delay ON star/delta time relay GRT8-ST

Instruction Manual

GEYA ELECTRICAL CO.,LTD
Add:Wenzhou Brige Industrial Zone,Beibaixiang Town, Yueqing,Zhejiang,China 325603
Tel:0086-577-62771036
Fax:0086-577-62711079
E-mail:sale@cnyeya.com
Web:www.geya.net

General

■ Applications
-Designated for delay ON of motors star/delta.

■Function Features
-Time t1 (star) :
time scale 0.1 s - 10min devided into 4 time ranges
rough time setting by rotary switch.
-Time t2 (delay) :
time scale 0.1 s - 1 s
time setting by potentiometer
- Relay status is indicated by LED.
- 1-MODULE,DIN rail mounting.

■Model and connotation

GRT8 – ST /□

- □: Rated control supply voltage:
  A230:AC230V
  A400:AC400V
  W240:AC/DC12V-240V
- ST: Delay ON star/delta
- GRT8: GRT8 Series

Technical parameters

Technical parameters		GRT8-ST
Function		Delay ON star/delta
Supply terminals		A1-A2
Voltage range	W240	AC/DC 12-240V(50-60Hz)
Burden	W240	AC 0.3-2VA/DC 0.1-1.2W
Voltage range	A230 A400	AC 230V(50-60Hz)
Power input	A230 A400	AC max.6VA/1.3W
Supply voltage tolerance		-15%;+10%
Supply indication		green LED
Time ranges		Range of time delay t1: 0.1 s - 10 min,Switch time t2: 0.1 s-1 s
Time setting		potentionmeter
Time deviation		10%-mechanical setting
Repeat accuracy		0.2%-set value stability
Temperature coecient		0.05%/℃,at=20℃(0.05%℉ , at=68℉)
Output		2×SPDT
Current rating		16A/AC1
Switching voltage		250VAC/24VDC
Min.breaking capacity DC		500mW
Output indication		red LED
Mechanical life		1×10^7
Electrical life(AC1)		1×10^5
Reset time		max.200ms
Operating temperature		-20℃ to +55℃ (-4℉ to 131℉)
Storage temperature		-35℃ to +75℃ (-22℉ to 158℉)
Mounting/DIN rail		Din rail EN/IEC 60715
Protection degree		IP40 for front panel/IP20 terminals
Operating position		any
Overvoltage cathegory		III.
Pollution degree		2
Max.cable size(mm^2)		solid wire max.1×2. 5or 2×1. 5/with sleeve max.1×2. 5(AWG 12)
Tightening torque		0.4Nm
Dimensions		90×18×64mm
Weight		W240-82g,A230-80g
Standards		EN 61812-1,IEC60947-5-1

Panel Diagram

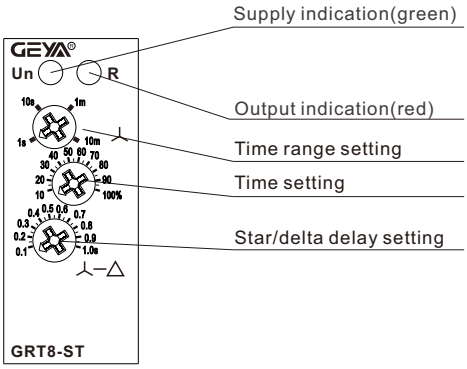

Functions Diagram

Delay ON star / delta

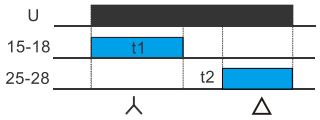

Setting instructions

	Knob 1: delay gear setting, “s” for second, “m” for minute.
	Knob 2: fine adjustment of delay time, 10% ~ 100% adjustable.

Delay time = knob 1 × knob 2.
Example 1: it needs to be set for 5 seconds. You can set knob 1 to 10s, knob 2 to 50%, and delay time = 10s × 50% = 5s.
Example 2: it needs to be set for 8 minutes. You can set knob 1 to 10m, knob 2 to 80%, and delay time = 10m × 80% = 8m.

Wiring Diagram

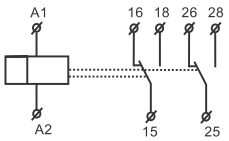

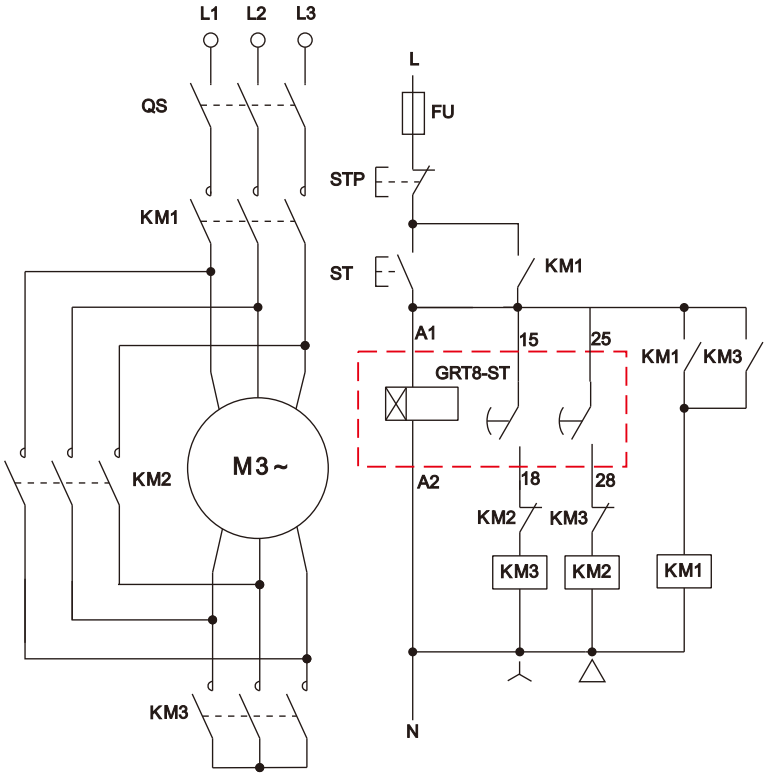

Dimensions(mm)

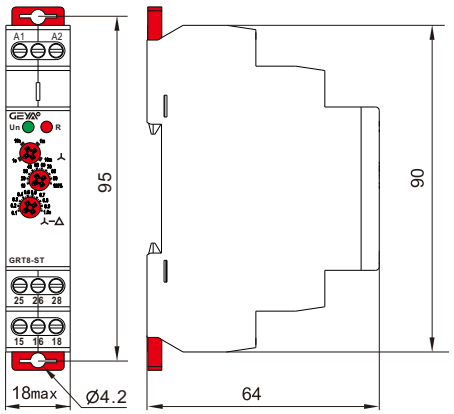

Disposal of Electrical Waste
All electrical waste should be disposed of in compliance with current WEEE regulations.

Caution
The products must be installed by qualified electricians. All and any electrical connections of the product shall comply with the appropriate safety standards.

http://www.geya.net