The product data referred to in the company shall be subject to material object.
Subject to change without notice. The company has the final right to interpret.

This album is printed with eco paper. Cherish resources, treat the environment.

GEYA

ZHEJIANG GEYA ELECTRICAL CO.LTD.

ADD: Wenzhou Brige Industrial Zone, Beibaixiang Town,Yueging, Zhejiang,China 325603
Tel：0577-62771712 Fax：0577-62711079 Tel：13567770207
E-mail：sale@cngeya.com Web：www.geya.net.

GEYA®

SURGE PRODUCT CATALOG

"Get to know everything about ADB"

ZHEJIANG GEYA ELECTRICAL CO.,LTD

GPS9-12.5

Surge Protective Device

Application

This Type 1+2 AC surge protective device is designed according to IEC / EN 61643-11 & GB 18802.11 which is for installation at LPZ 0A -2 or higher, protecting low voltage equipment against lightning and surge damages. Applied SPD Modular in Class I+II (Class B+C) for various power supply system.

Main Character

1. 10/350μs, 8/20μs T1+T2 protection;
2. High discharge capacity, quick response, pluggable;
3. Double thermal disconnection devices, providing more reliable protection;
4. Visual window display, green means normal, Red means defect(need to change new module);
5. Remote terminal optional;
6. Voltage can customize.

Technical Parameter

Model	GPS9-12.5
Test standard	IEC/EC 61643-11;GB18802.11
SPD type	T1+T2/Class I +Class II
Max. AC operating voltage(Ue)	275V AC
Nominal discharge current(8/20μs)	20kA
Max. discharge current(8/20μs)	50kA
Limp current(10/350μs)	12.5kA
Poles	1P;2P;3P;4P;1P+N-PE;3P+N-PE
Voltage protection level Up	⩽1.5kV
Response time Ta	⩽25ns;⩽100ns
Connection wire specification	6mm^2(L/N);10mm^2(PE)
Mounting	35mm Din Rail
Matched fuse or circuit breaker	63A
Type of remote sinaling contact(Optional)	C+NO:Normally open;COM:Common contact
Max.Voltage/Current for remote signaling	1A/2A/3A 125V AC
Wiring for remote signaling	1.5mm^2 max
Operating temperaturer	-40°C to +85°C
Certificate	
Shell material	UL94-V0 Fireproof material

Dimension and wiring diagram details(Remote terminal optional)

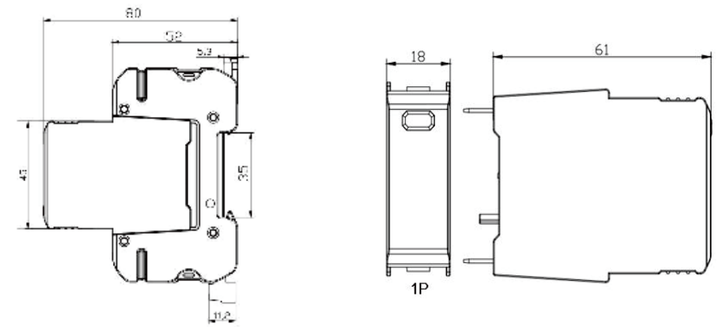

(Dimension:mm)

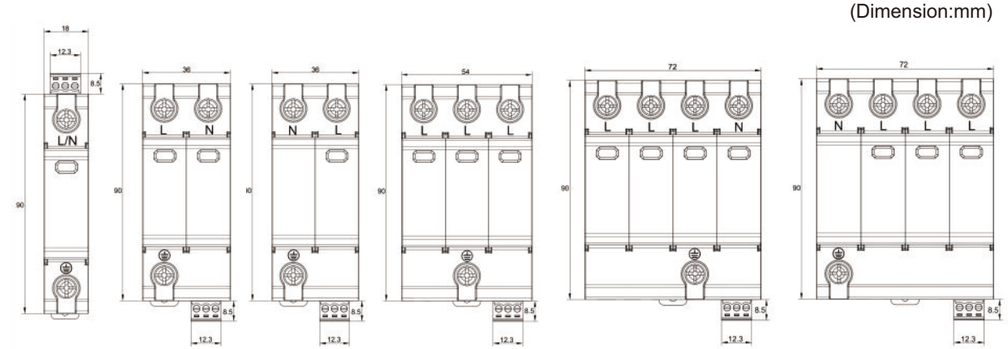

1P 2P 1P+N-PE 3P 4P 3P+N-PE

Installation Diagram

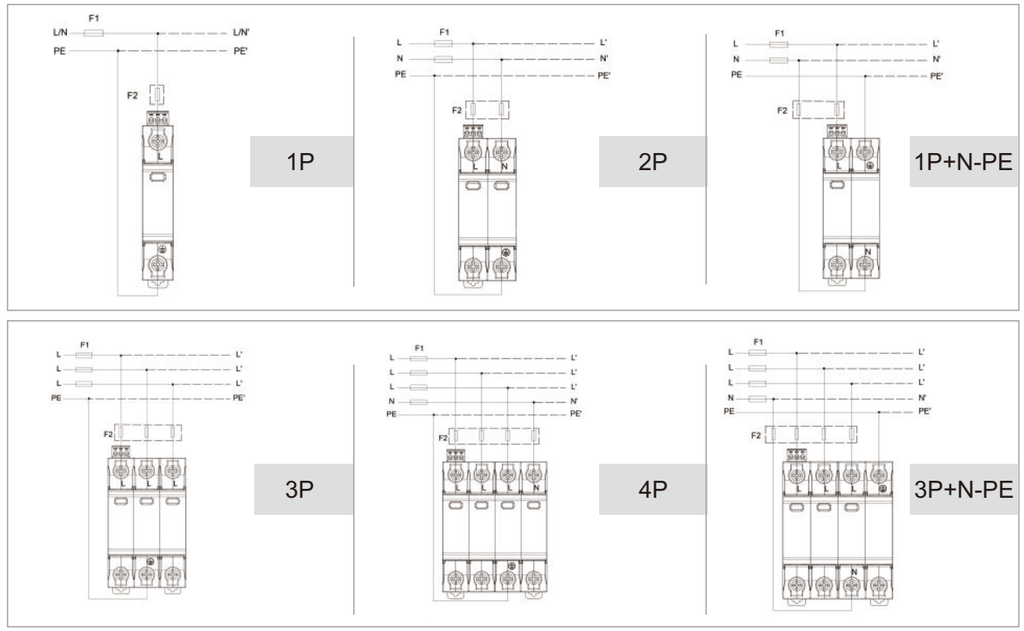

GSP9-D20

Surge Protective Device

Application

This AC surge protective device is applied low voltage standard IEN 61643-11 to protect against AC power line system and other equipment from over voltage and instantaneous over voltage damage.It has advantages of large discharge current ,fast respond time and low residual voltage.

Main Features

1. High discharge capacity,quick response,pluggable.
2. Fast response time ,din rail installation.
3. Double thermal disconnection devices, providing more reliable protection.
4. Green window means normal ,red means defect ,need to change module.
5. Remote alarm terminal optional.
6. Voltage can be customized.
7.Class II type 2 surge protection.

Technical Parameter

Model	GPS9-D20
Test standard	IEC/EN61643-11;GB18802.11
SPD type	T2/Class II
Max. AC operating voltage(Uc)	275V/385V AC
Nominal discharge current(8/20μs)	10kA
Max. discharge current(8/20μs)	20kA
Voltage protection level Up	⩽ 1.5kV(275V AC) ⩽ 1.8kV(385V AC)
Response time Ta	25ns
Poles	1P 2P 3P 4P 1P+N-PE 3P+N-PE
Matched fuse or circuit breaker	32A
Connection wire specification	$4mm^2$(L/N);$6mm^2$(PE)
Method of installation	35mm Din Rail
Type of remotesignaling contact(Optional)	C+NC:Normally closed C+NC:Normally open C:Common contact
Max. Voltage/Current for remote signaling	1A/2A/3A 125V AC
Wiring for remote signaling	$1.5mm^2$ max.
Operating temperature	-40°C to +85°C
Shell material	UL94-V0 fireproof material

Dimension details(Remote terminal optional)

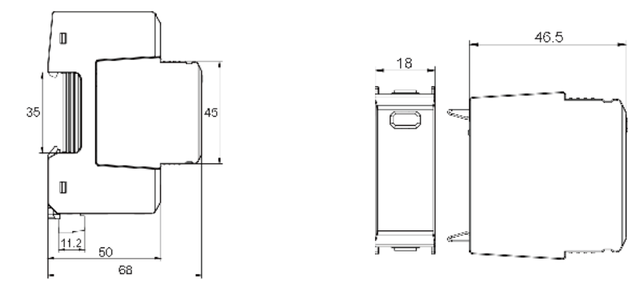

(Dimension:mm)

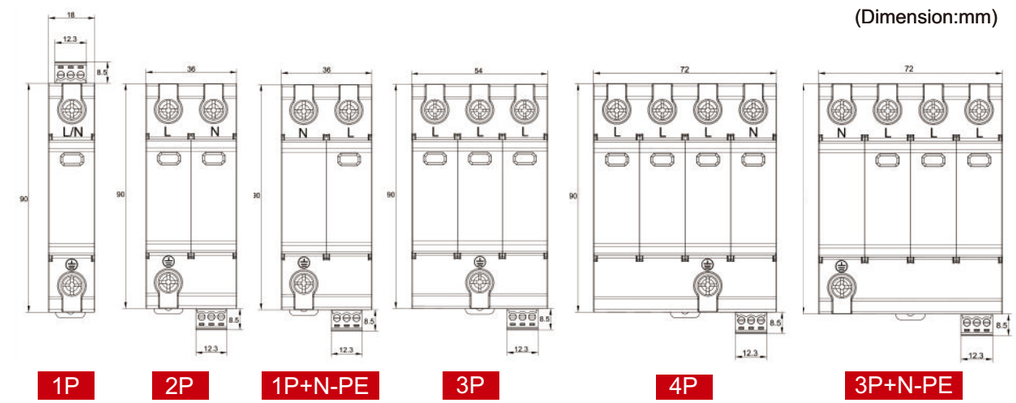

Installation Diagram

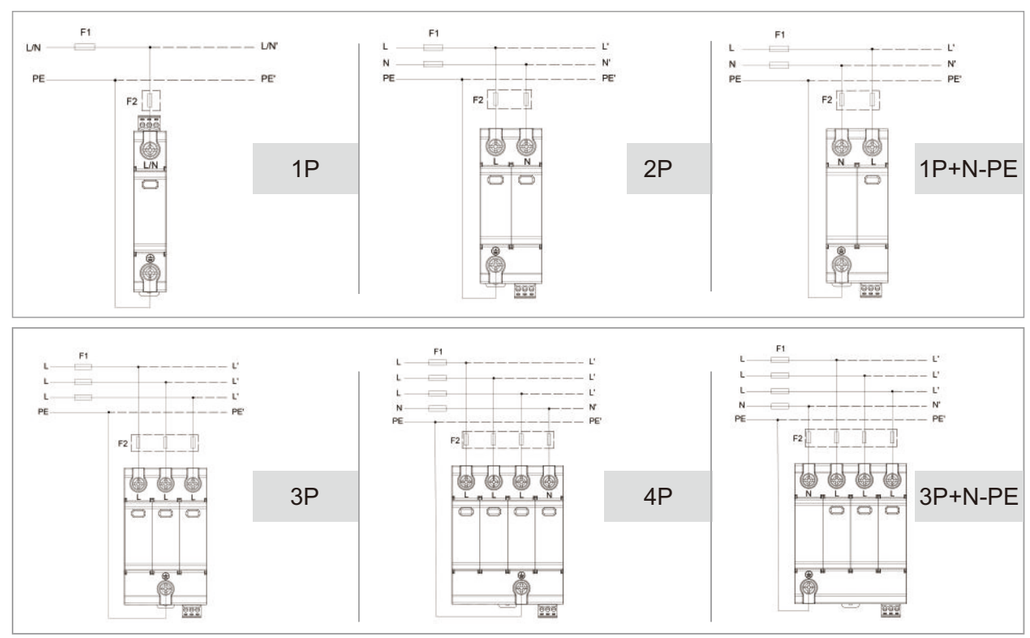

GSP9-C40

Surge Protective Device

Application

This AC surge protective device is applied low voltage standard IEN/61643-11 to protect against AC power line system and other equipment from over voltage and instantaneous over voltage damage.It has advantages of large discharge current, fast respond time and low residual voltage.

Main Features

1. High discharge capacity,quick response,pluggable.
2. Fast response time ,din rail installation.
3. Double thermal disconnection devices, providing more reliable protection.
4. Green window means normal ,red means defect ,need to change module.
5. Remote alarm terminal optional.
6. Voltage can be customized.

Technical Parameter

Model	GPS9-C40
Test standard	IEC/EN 61643-11;GB18802.11
SPD type	T1+T2/ClassI+ClassII
Max. AC operating voltage(Uc)	275V/385V AC
Nominal discharge current(8/20μs)	20kA
Max. discharge current(8/20μs)	40kA
Iimp current(10/350μs)	5kA
Voltage protection level Up	⩽ 1.5kV(275V AC) ⩽ 1.8kV(385V AC)
Response time Ta	25ns
Poles	1P 2P 3P 4P 1P+N-PE 3P+N-PE
Matched fuse or circuit breaker	32A
Connection wire specification	$4mm^2$(L/N);$6mm^2$(PE)
Mounting	35mm Din Rail
Type of remote signaling contact(Optional)	C+NC:Normally closed C+NC:Normally open C:Common contact
Max.Voltage/Current for remote signaling	1A/2A/3A 125V AC
Wiring for remote signaling	$1.5mm^2$ max.
Operating temperature	-40°C to +85°C
Shell material	UL94-V0 fireproof material

Dimension details(Remote terminal optional)

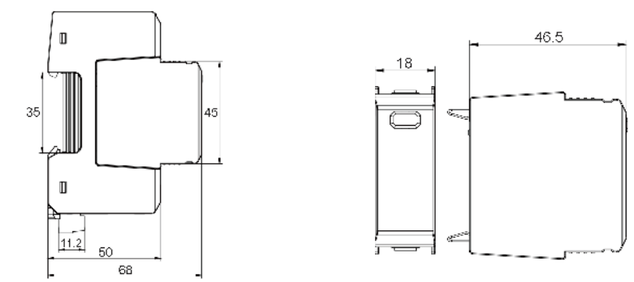

(Dimension:mm)

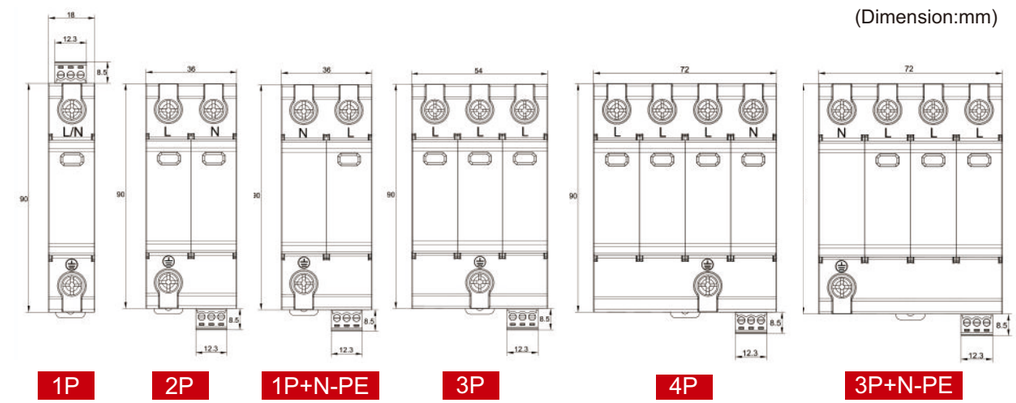

Installation Diagram

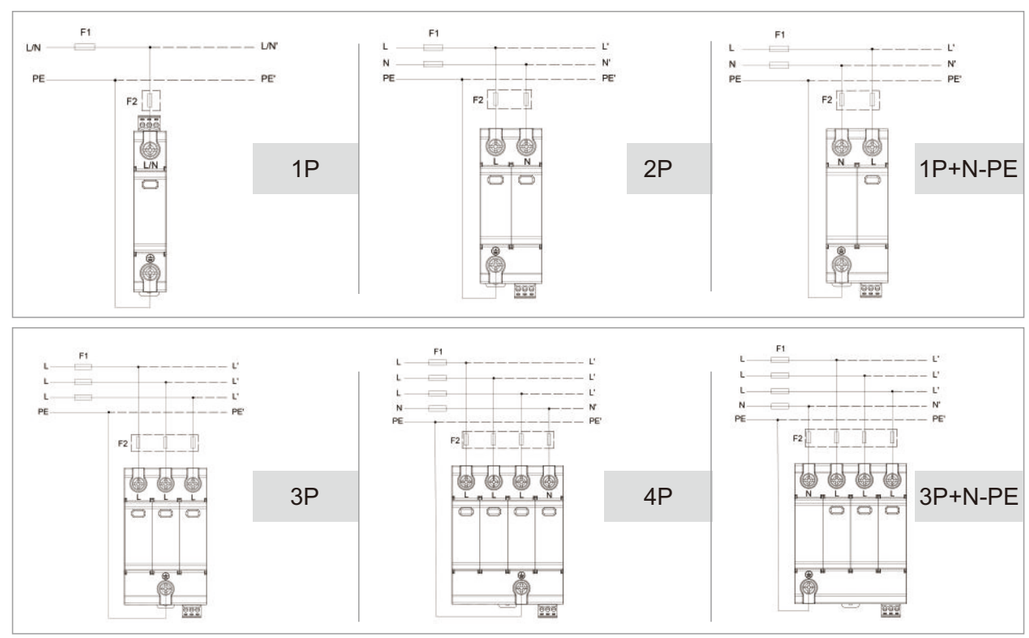

GSP9-B60

Surge Protective Device

Application

This AC surge protective device is applied low voltage standard IEC/61643-11 to protect against AC power line system and other equipment from over voltage and instantaneous over voltage damage.It has advantages of large discharge current ,fast respond time and low residual voltage.

Main Features

1. High discharge capacity,quick response,pluggable.
2. Fast response time ,din rail installation.
3. Double thermal disconnection devices, providing more reliable protection.
4. Green window means normal ,red means defect ,need to change module.
5. Remote alarm terminal optional.
6. Voltage can be customized.
7.Class II type 2 surge protection.

Technical Parameter

Model	GPS9-B60
Test standard	IEC/EN 61643-11;GB18802.11
SPD type	T2/Class II
Max. AC operating voltage(Uc)	275V/385V AC
Nominal discharge current(8/20μs)	30kA
Max. discharge current(8/20μs)	60kA
Voltage protection level Up	⩽ 1.5kV(275V AC) ⩽ 1.8kV(385V AC)
Response time Ta	25ns
Poles	1P 2P 3P 4P 1P+N-PE 3P+N-PE
Matched fuse or circuit breaker	32A
Connection wire specification	$4mm^2$(L/N);$6mm^2$(PE)
Mounting	35mm Din Rail
Mounting	C+NC:Normally closed
Type of remote signaling contact(Optional)	C+NC:Normally open C:Common contact
Max.Voltage/Current for remote signaling	1A/2A3A 125V AC
Cross-sectional area for remote signal contact	$1.5mm^2$ max.
Operatingtemperaturerange	-40℃ to +85℃
Shell material	UL94-V0 fireproof material

Dimension details(Remote terminal optional)

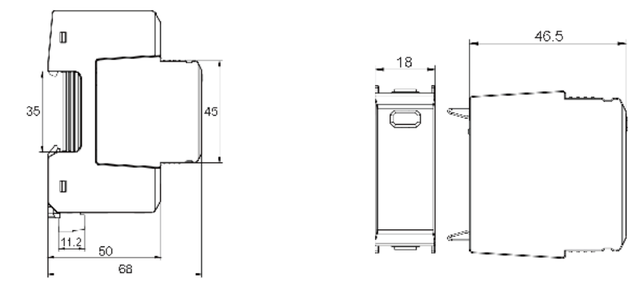

(Dimension:mm)

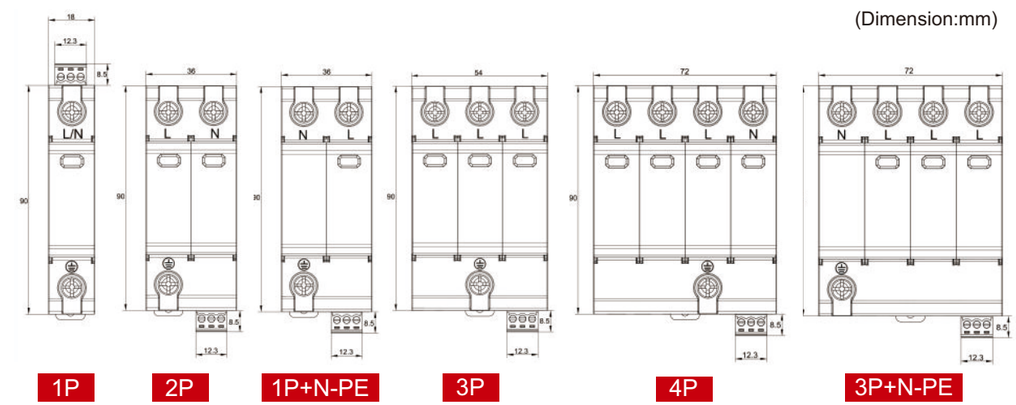

Installation Diagram

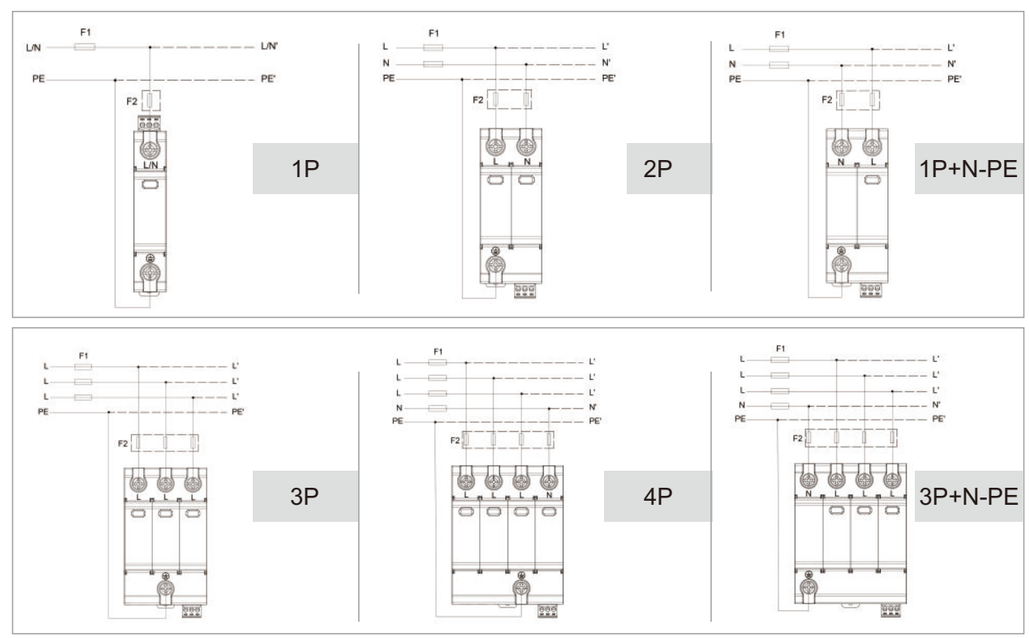

GSP9-C40PV

600V 1000V DC

Surge Protective Device

Application

This DC surge protective device is applied low voltage standard IEC/EN 61643-11 to protect against DC power line system and other equipment from over voltage and instantaneous over voltage damage. Widely used in photovoltaic comber box, power inverter, DC distribution cabinet etc. It has advantages of large discharge current, fast respond time, low residual voltage. Max. PV voltage up to UCPV ≤1000V dc.

Main Features

1. High discharge capacity, quick response, module pluggable;
2. Fast response time, din rail installation;
3. Double thermal disconnection devices, provide more reliable protection;
4. Green window means normal, red means defect, need to change module;
5. Remote alarm terminal optional.
6. T1+T2 surge protection.

Technical Parameter

Model	GSP9-C40PV
Test standard	IEC/EN 61643-11;GB18802.11
SPD type	T1+T2/I+IIC
Max. PV operating voltage(Uc)	600V DC 1000V DC
Nominal discharge current（8/20μs)	20kA
Max. discharge current(8/20μs)	40kA
Iimp current(10/350μs)	6.25kA
Poles	2P 2P/3P
Voltage protection level Up pv	⩽2.6kV ⩽3.6kV
Response time Ta	25ns
Connection wire specification	4mm²(L/N);6mm²(PE)
Mounting	35mm Din Rail
Matched fuse or circuit breaker	32A
Type of remote signaling contact(Optional)	C+NC:Normally closed C+NO:Normally open C:Common contact
Max.Voltage/Current for remote signaling	1A/2A/3A 125V AC
Wiring for remote signaling	1.5mm² max.
Operating temperature	-40℃to +85℃

Dimension details unit: mm(Remote terminal optional)

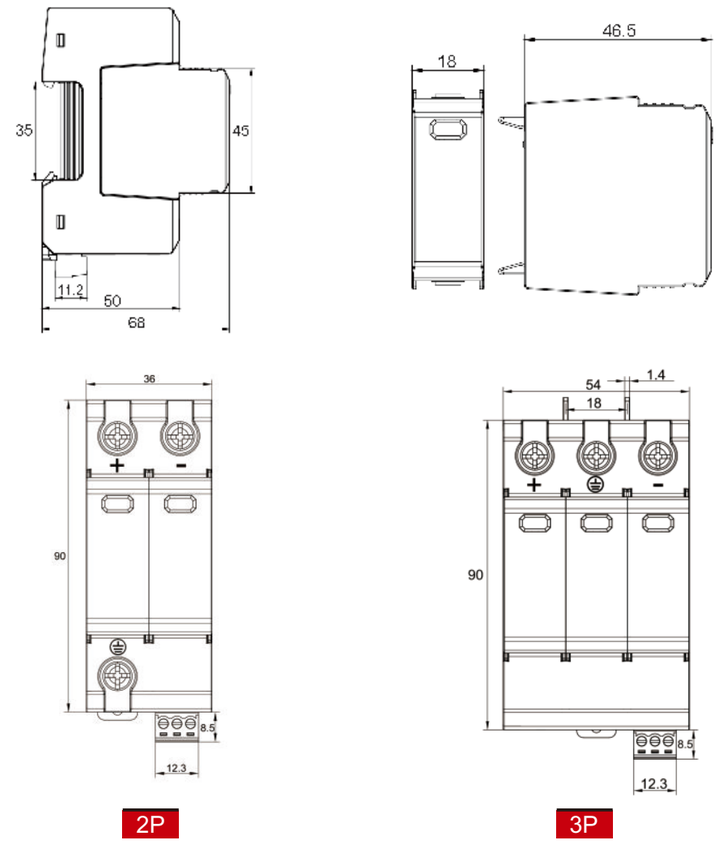

(Dimension:mm)

Wiring diagram(2P&3P)

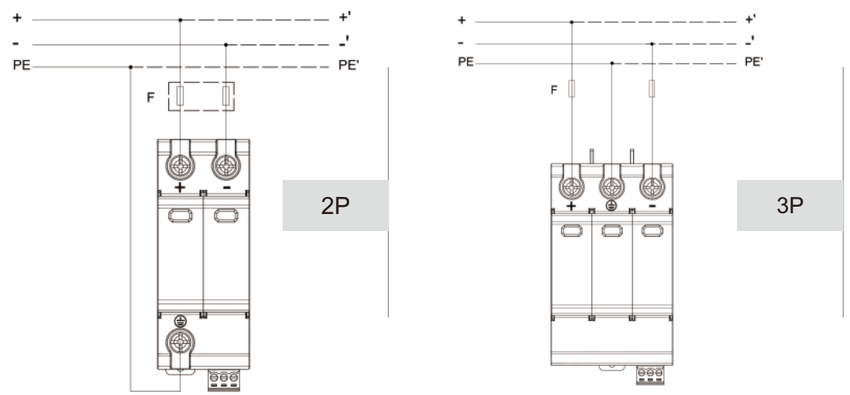

GSP9-C40PV
1500V DC
Surge Protective Device

Application

This DC surge protective device is applied low voltage standard IEC/EN 61643-11 to protect against DC power line system and other equipment from over voltage and instantaneous over voltage damage. Widely used in photovoltaic comber box, power inverter, DC distribution cabinet etc. It has advantages of large discharge current, fast respond time, low residual voltage. Max. PV voltage up to UCPV ≤1500V DC.

Main Features

1. High discharge capacity, quick response, module pluggable;
2. Fast response time, din rail installation;
3. Double thermal disconnection devices, provide more reliable protection;
4. Green window means normal, red means defect, need to change module;
5. Remote alarm terminal optional.
6. T1+T2 surge protection.

Technical Parameter

Model	GSP9-C40PV
Test standard	IEC/EN 61643-11;GB18802.11
SPD type	T1+T2/ClassI+II
Max. PV operating voltage(Uc)	1500VDC
Nominal discharge current(8/20μs)	20kA
Max.dischargecurrent(8/20μs)	40kA
Iimp current(10/350μs)	6.25kA
Poles	3P
Voltage protection level Up pv	⩽5.6kV
Response time Ta	25ns
Connection wire specification	4mm²(L/N);6mm²(PE)
Mounting	35mm Din Rail
Matched fuse or circuit breaker	32A
Type of remote signaling contact(Optional)	C+NC:Normally closed C+NO:Normally open C:Common contact
Max.Voltage/Current for remote signaling	1A/2A/3A 125V/ AC
Wiring for remote signaling	1.5mm² max.
Operatingtemperaturerange	-40°C to+ 85°C

Dimension details(Remote terminal optional)

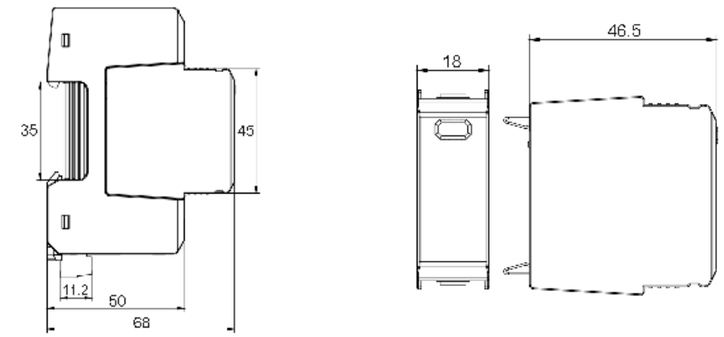

(Dimension:mm)

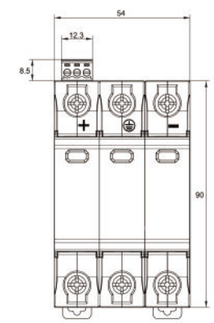

3P

Wiring diagram: 3P

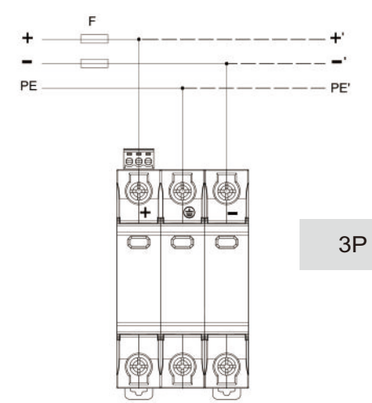

3P

GSP9-DP

Surge Protective Device

Application

This AC Surge protective device is applied low voltage standard IEC/EN 61643-11 to protect against AC power line system and other equipment from over voltage and instant aneous over voltage damage. It has advantages of large discharge current ,fast respond time and low residual voltage.

Main Features

1. High discharge capacity,quick response,pluggable.
2. Fast response time ,din rail installation.
3. Double thermal disconnection devices, providing more reliable protection.
4. Green window means normal ,red means defect ,need to change module.
5. Remote alarm terminal optional.
6. Voltage can be customized.

Technical Parameter

Model	GPS9-DP40
Test standard	IEC 61643-11;GB18802.11
SPD type	T2/Class II
Maximum continuous operating voltage Uc	275V AC
Nominal discharge current(8/20μs)	20kA
Max.dischargecurrent(8/20μs)	40kA
Voltage protection level Up	⩽1.5kV
Response time Ta	25ns
Poles	2P,4P,1P+N-PE,3P+N-PE
Matched fuse or circuitbreaker	32A
Connection wire specification	4mm²(L/N);6mm²(PE)
Mounting	35mm Din Rail
Type of remote signaling contact(Optional)	C+NC:Normally closed
	C+NC:Normally open
	C:Common contact
Switching capacity	AC:250V/0.5A DC:250V/0.1A, 125V/0.2A,75V/0.5A
Cross-sectional area for remote signal contact	Max.1.5mm² solid / flexible
Operatingtemperaturerange	-40°C to+85°C
Shell material	UL94-V0 fireproof material

Dimension details(Remote terminal optional)

(Dimension:mm)

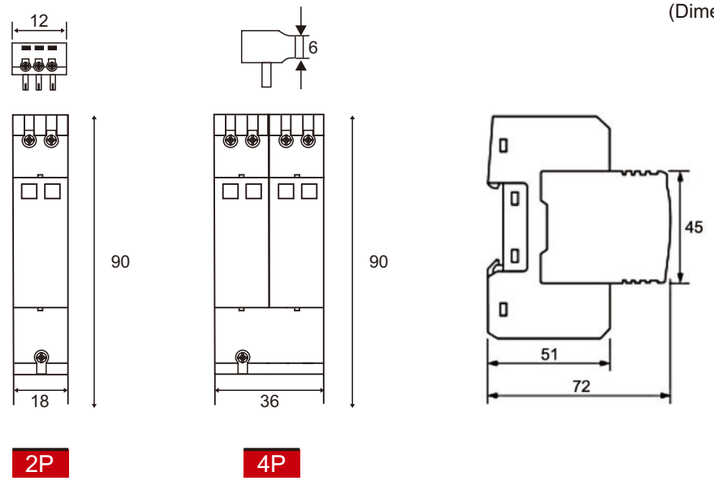
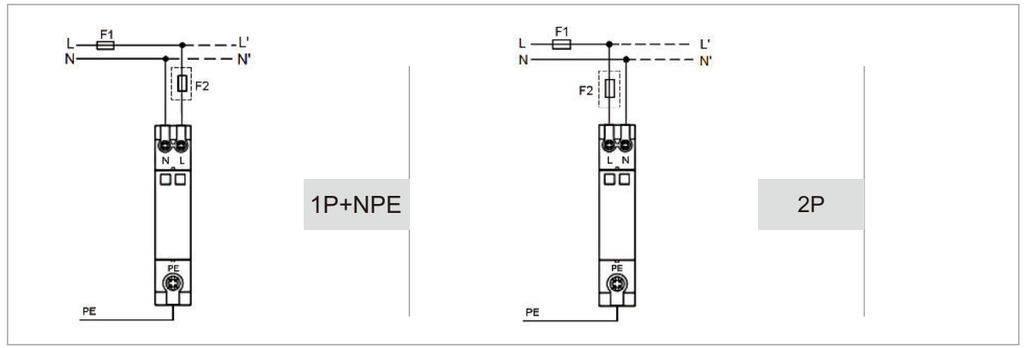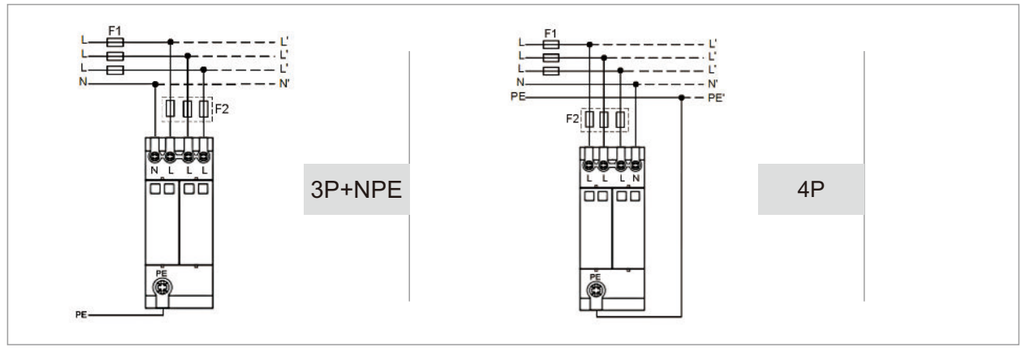
Wiring diagram