Front Reference

Side Reference

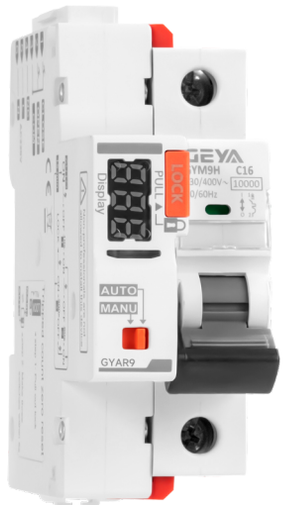

Model	Reted Voltage	Functions	Optional Items
GYAR9-AC-G	AC~220V	Auto Reclosing +Dry Contact Control	Digital Display
GYAR9-AC-S	AC~220V	Auto Reclosing +Wet Contact Control	Digital Display
GYAR9-AC-RS	AC~220V	Auto Reclosing +RS485 Control	Digital Display Timing
GYAR9-AC-UV	AC~220V	Self-recovering over&under voltage protection	Digital Display
GYAR9-AC-PV	AC~220V	Photovoltaic/power-off open /power-up close	Digital Display
GYAR9-DC-RS	DC-48V	Auto Reclosing +RS485 Control	Digital Display Timing

Remarks: GYAR9 can be adapted to Acti9 iC65 miniature circuit breaker, and other manufacturers' circuit breakers with C65 structure can also be customized and adapted.
The length of the operating handle can be purchased according to user needs, and can be configured with 1P-4P circuit breakers.

Technical Specifications

Standard	EN 50155, GB/T 24338.4-2018, EN 45545-2, IEC 61373
Adaption	Acti9 Series 1P-4
Electrical Characteristics	
Operating Voltage	230V AC (70%~125%) 24-48V DC(optional)
Control signal	MODBUS-RS485 Wet node 230V high level/pulse signal (optional)
Over&Under voltage function	160-275V ±5V (optional)
Timing function	Available (optional)
Digital display	3-digit voltage, switching times, fault status
Effective control signal duration	>400ms
Closing action time	< 1s
Opening action time	< 0.5s
Control circuit cable length	≤1500m
Current-carrying capacity of auxiliary contacts (terminals 8-9-10)	1CO, minimum operating current 3mA (24VDC) (resistive) (optional)
Current-carrying capacity of signaling contacts (terminals 5-6-7)	Maximum operating current 2A (30V DC), 0.5A (125V AC) (optional)
Power consumption	≤ 1.5VA (static); ≤25VA (dynamic)
Rated insulation voltage	400V
Rated Impulse Withstand Voltage Uimp (between S2C-RM DC and MCB)	4kV (4.9kV at sea level)
Self-locking protection	Within 10s of 3CO / 20s of 4CO / 30s of 6CO, the product will self-lock and recover automatically after 40s.
Electrical life	10000 times, 3 times/minute
Mechanical Characteristics	
Indicator Light	Green, Normal status
	Red, MCB overcurrent fault
Auto/Manual switching	Auto Remote control of opening&closing available
	Manual Remote control of opening&closing disabled
Mechanical life	10000
Protection class	Ip20
Hazard class according to EN 45545-2	EN 45545-2 R26 /HL3
Shock and vibration resistance According to IEC 61373	category 1 - class A/B - body mounted
Resistance to heat and humidity IEC/EN 60068-2-30	28 cycles (55°C/90-96 % , 25°C/95-100 %)
Ambient Temperature	-25...+70°C
Storage Temperature	-40...+70°C
Installation and Wiring	
Power and control signal terminal wiring capacity	28-12AWG 2.5mm²
Auxiliary signal terminal wiring capacity	28-14AWG 1.5mm²
DIN rail mounting	DIN rail EN 60715 (35 mm)
Mounting position	Mounting on DIN rail Any position

A New Generation of Modular Power Management

Self-recovery PV Special Reclosing Actuator: Compatible with Schneider Electric A9 series air opening IC65N miniature circuit breaker. Intelligently upgrade the circuit breaker (without affecting the circuit breaker itself). It can be remotely controlled by MODBUS 485 for automatic closing and opening,have overload protection and short circuit protection functions,and have parameterized and configurable functions which can be automatically judged by MCU,realizing the function of opening the circuit breaker when power outage and automatically closing when power on.Currently widely used in photovoltaic grid-connected AC distribution boxes,as well as the following occasions, including places that are difficult for personnel to access, places where maintenance personnel cannot be in place in time, unattended occasions, and places with high requirements for power supply continuity.

Product Features

- Visual voltage display makes it easier for maintenance personnel to judge the circuit during maintenance.
- Equipped with a LOCK padlock device to achieve a double protection mechanism and provide additional protection for circuit maintenance
- Supports MODBUS 485 remote communication function to remotely understand the working status of the device
- Supports local operation fault storage, and when the remote communication function is restored, the device data can be read
- Remote automatic mode can operate safely and efficiently based on MCU self-test

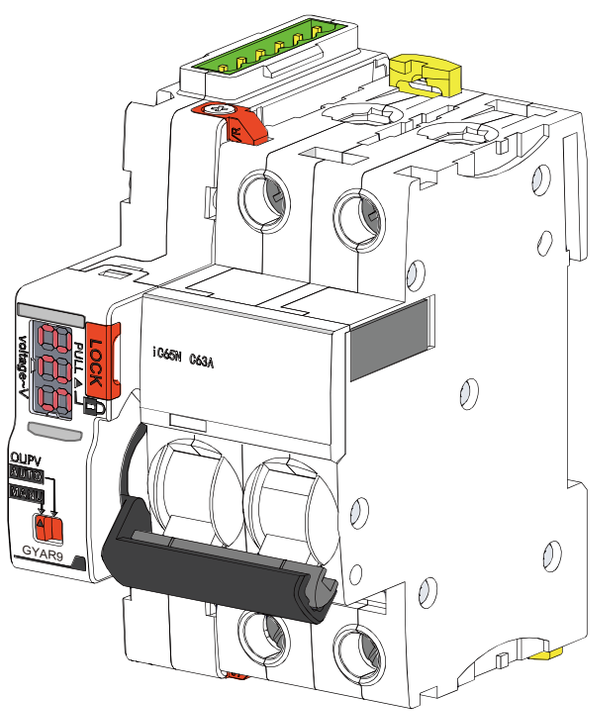

DANGER

Please note

1. Equipment installation, maintenance and replacement must be completed by qualified electricians.
2. Repairs to the equipment are prohibited.
3. All applicable local, regional and national regulations must be followed when installing, using, maintaining and replacing equipment.
4. If the device is found to be damaged when unpacking, please do not install it.
5. The company is not responsible for any adverse consequences caused by failure to comply with the instructions of this document and the documents mentioned in thearticle.
6. Relevant maintenance regulations must be strictly followed throughout the entire life cycle of the equipment.。

Please attention

1. There may be a risk of electric shock, explosion or arc burns
2. Be sure to cut off all power supplies before maintaining the equipment.
3. Use an electroscope with an appropriate voltage rating to confirm that all conductors are uncharged.
4. Failure to follow the above instructions will result in personal injury or death.

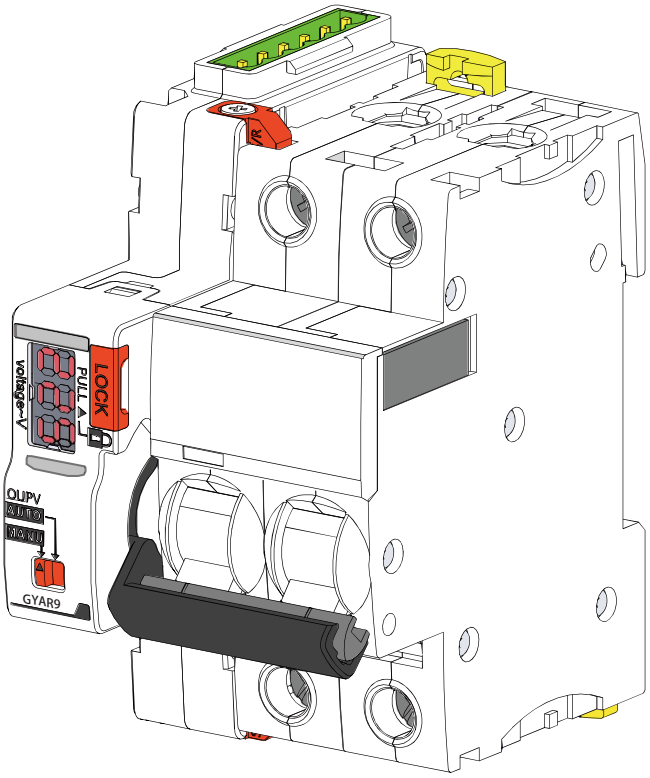

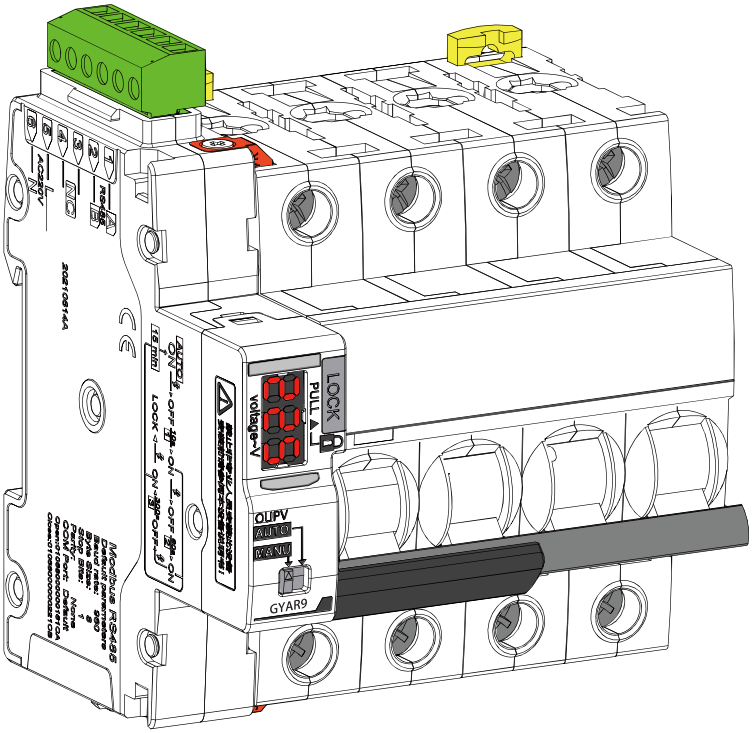

Installation

1

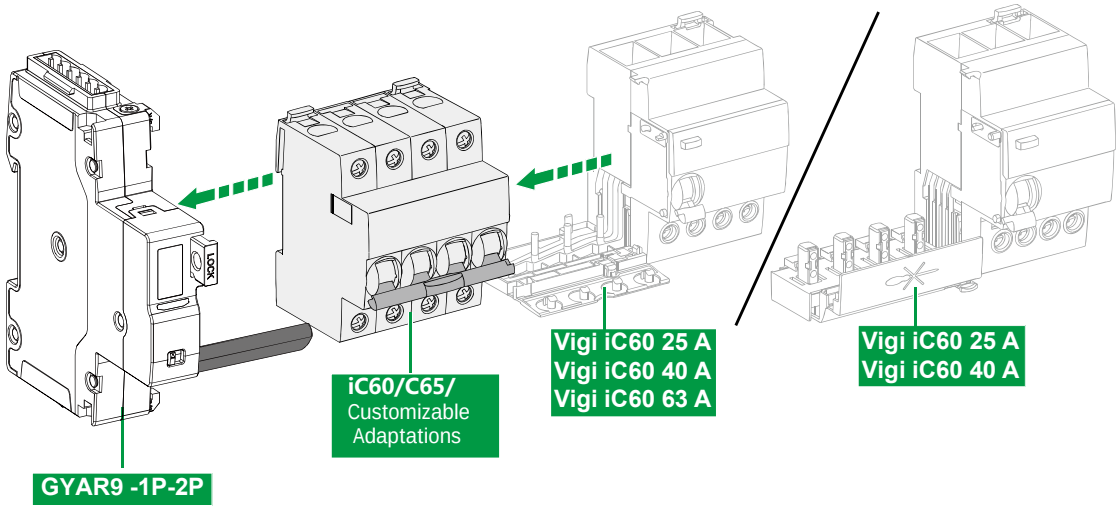

NOTE：

1.GYAR9-Confirm the handle length with sales at the time of purchase-1P/2P

2.MCB-Preferred iC60 Series in Adaptation，other models can be custom adapted.

2

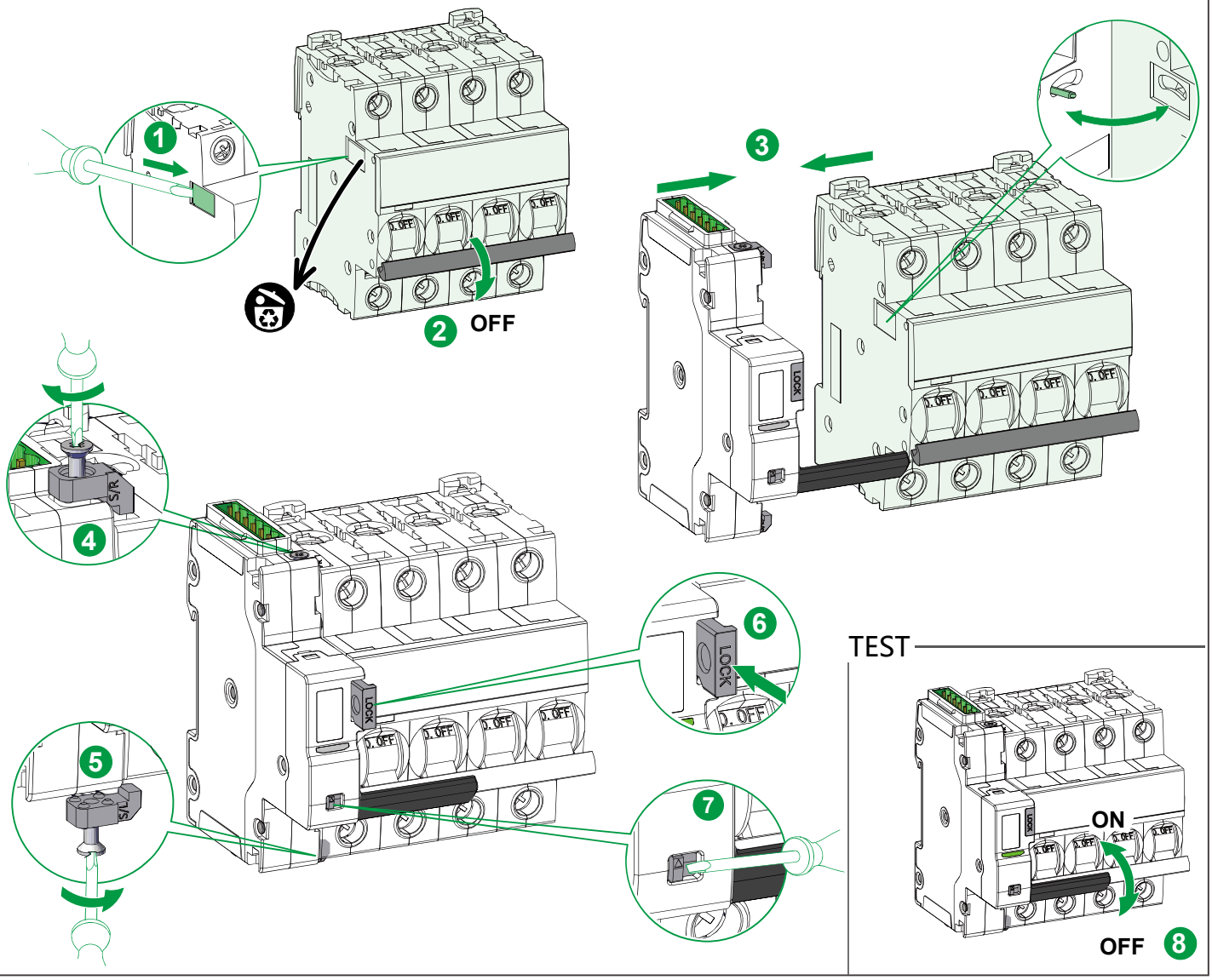

3

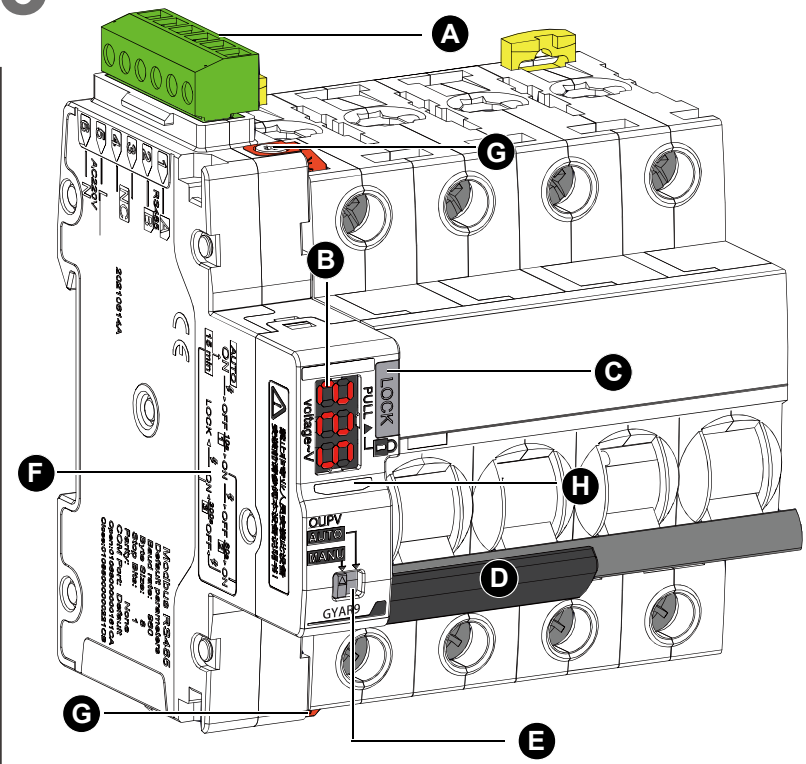

- **A** 6*5.08mm Terminal
- **B** Digital Display Panel（V）
- **C** LOCK Security Padlock
- **D** Control Panel（1P-18mm/2P-36mm）
- **E** AUTO/MANU Mode switching Auto
- **F** Run Logic Diagram（Specific Models Are Different）
- **G** Top and Bottom Fixing Clip
- **H** Status Indicators

4

AUTO Mode Run Logic

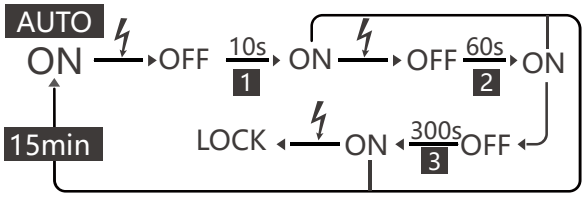

when the equipments need servies put **E** switch to MANU.

1.Risk of electric shock, explosion or arc burns.
2.Cut off all power before service equipment
3.Not following the above instructions will cause injure.

A Connect terminals as shown in the picture

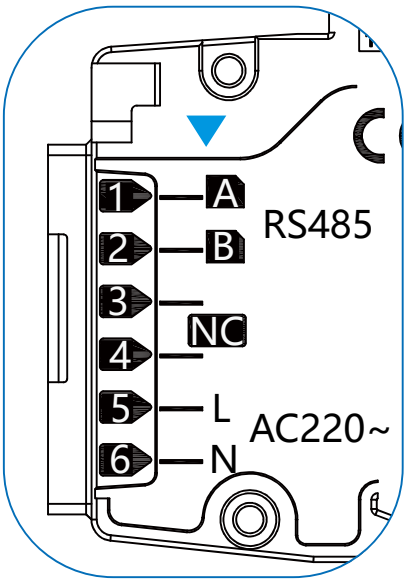

Wiring

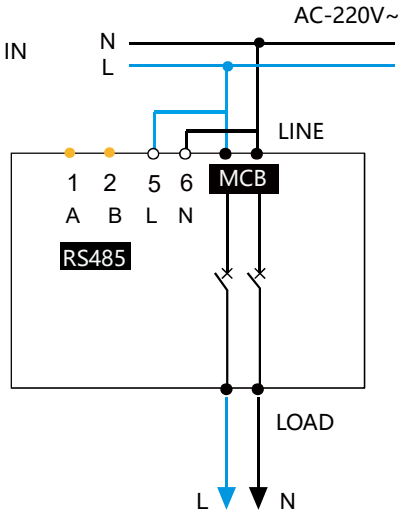

Single-phase/Three-phase L can take ABC as the power cord

5

Installation Dimension Drawing
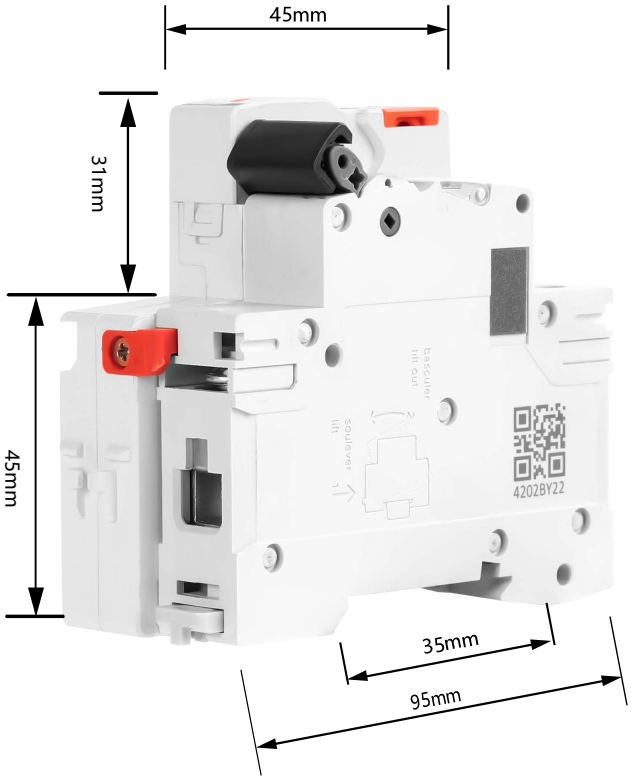
With 3P-4P micro break length of 36 mm
With 1P-2P micro break length of 18 mm