GEYA
格亚电气

专注断路器二十余年

GYMP7 系列电动机保护用断路器 Motor Protection Circuit Breaker

GYMP7 系列电动机保护用断路器
GYMP7 Series motor protection circuit breaker

GYMP7-32

GYMP7-32X

GYMP7-32P

GYMP7-80

主要用途与适用范围 Application Area

GYMP7 系列电动机保护用断路器（另称：马达保护器或电动机起动器，以下简称”断路器“）适用于交流电压至 690V，最高电流至 80A 的电路中，是将隔离开关、断路器、热继电器功能集一体的断路器。具有隔离保护、过载保护、温度补偿、断相保护、短路保护；应用范围：三相鼠笼型异步电动机直接起动和控制、配电线路保护和不频繁的负载转换。

该系列产品符合 GB/T 14048.2、GB/T 14048.4、IEC60947-2、60947-4-1 标准。

GYMP7 Series Motor protection circuit breaker (also known as: Motor Protector or Motor starter, hereinafter referred to as "circuit breaker") is suitable for AC voltage to 690V, the highest current to 80A circuit, is the isolation switch, circuit breaker, thermal relay function set one circuit breaker. It has isolation protection, overload protection, temperature compensation, phase break protection, short circuit protection, application range: three-phase mouse cage asynchronous motor direct start and control, distribution line protection and infrequent load conversion.

GYMP7 circuit breaker complies to GB/T 14048.2, GB/T 14048.4, IEC60947-2, 60947-4-1 standards.

型号及含义 Model Code

GYMP7 - □ / □ □

- 无：普通型 None: Normal type　X: 高端型 High-end type
- P: 旋钮式操作 Knob operation
- 脱扣器整定电流（A）Trip unit setting current (A)
- 壳架等级额定电流 Rack rated current:32A、80A
- GYMP7 表示企业代号和设计序号
  GYMP7 Represents an enterprise code and design serial number

正常工作和安装条件 Normal work and installation conditions

1. 安装地点的海拔一般不超过 2000m。
2. 周围空气温度下限一般不低于 -5℃，上限一般不高于 +40℃。
3. 空气相对湿度在温度为 +40℃时相对湿度不大于 50%，在最湿月的月平均最低温度在 25℃，时月平均最大相对湿度不大于 90%。
4. 周围环境污染等级为 3 级。
5. 起动器的安装类别为Ⅲ。
6. 安装面与垂直面倾斜度不大于 ±5° 。
7. 额定工作制：不间断工作制、断续工作制。

1. The altitude of the installation site is generally not more than 2000m.
2. The lower limit of ambient air temperature is generally not lower than -5 °C, and the upper limit is generally not higher than +40 °C.
3. The relative humidity of the air is not more than 50% when the temperature is +40 °C, and the minimum monthly temperature of the wettest month is 25 °C, and the monthly average maximum relative humidity is not more than 90%.
4. The surrounding environment pollution level is 3.
5. Starter installation categories are III.
6. The inclination of the mounting surface and the vertical plane is not more than ±5°.
7. Rated work system: uninterrupted work system , Intermittent working system.

主要技术参数 The main technical parameters

1. 额定绝缘电压 Ui(V)：690
2. 额定冲击耐受电压 Uimp（kV）：6
3. 额定工作电压 Ue（V）：
   230/240、400/415、440、500、690
4. 额定频率（Hz）：50、60
5. 壳架等级额定电流 Inm（A）：32A、80A
6. 额定电流 In（A）：见表 1

1. Rated insulation voltage Ui(V): 690
2. Rated impulse withstand voltage Uimp(kV): 6
3. Rated operating voltage Ue(V):
   230/240, 400/415, 440,500,690
4. Rated frequency (Hz): 50,60
5. Frame rated current Inm(A): 32A,80A
6. Rated current In(A): see Table 1

7. 热元件整定电流调节范围：额定极限和额定运行短路分断能力见表 1。
7. Hot component setting current adjustment range: rated limit and rated operating short-circuit breaking capacity see Table 1.

表 1 Table 1

型号 Model	脱扣器额定电流 In(A) Fastener rated current In (A)	整定电流调节范围 (A) Tuning current adjustment range (A)	额定极限短路分断能力 Icu、额定运行短路分断能力 Ics kA Rated limit short-circuit breaking capability ICU, rated operation short-circuit breaking capability Ics kA				飞弧距离 (mm)
			400/415V		690V		
			Icu	Ics	Icu	Ics	
GYMP7-32(X/P)	0.16	0.1~0.16	100	100	100	100	40
GYMP7-32(X/P)	0.25	0.16~0.25	100	100	100	100	40
GYMP7-32(X/P)	0.4	0.25~0.4	100	100	100	100	40
GYMP7-32(X/P)	0.63	0.4~0.63	100	100	100	100	40
GYMP7-32(X/P)	1	0.63~1	100	100	100	100	40
GYMP7-32(X/P)	1.6	1~1.6	100	100	100	100	40
GYMP7-32(X/P)	2.5	1.6~2.5	100	100	3	2.25	40
GYMP7-32(X/P)	4	2.5~4	100	100	3	2.25	40
GYMP7-32(X/P)	6.3	4~6.3	100	100	3	2.25	40
GYMP7-32(X/P)	10	6~10	100	100	3	2.25	40
GYMP7-32(X/P)	14	9~14	15	7.5	3	2.25	40
GYMP7-32(X/P)	18	13~18	15	7.5	3	2.25	40
GYMP7-32(X/P)	23	17~23	15	6	3	2.25	40
GYMP7-32(X/P)	25	20~25	15	6	3	2.25	40
GYMP7-32(X/P)	32	24~32	10	6	3	2.25	40
GYMP7-80	25	16~25	15	7.5	4	2	50
GYMP7-80	40	25~40	15	7.5	4	2	50
GYMP7-80	63	40~63	15	7.5	4	2	50
GYMP7-80	80	56~80	15	7.5	4	2	50

8. 断路器所控制三相电动机标准额定功率见表 2。

8. The standard rated power of the three-phase motor controlled by the circuit breaker is shown in table 2.

表 2 Table 2

型号 Model	脱扣器额定电流 In(A) Fastener rated current In (A)	整定电流调节范围 (A) Tuning current adjustment range (A)	三相电动机标准额定功率 (kw) Standard rated power of three-phase motor (kw)					
			AC-3,50Hz/60Hz					
			230/240V	400V	415V	440V	500V	690V
GYMP7-32(X/P)	0.16	0.1~0.16	-	-	-	-	-	-
GYMP7-32(X/P)	0.25	0.16~0.25	-	-	-	-	-	-
GYMP7-32(X/P)	0.4	0.25~0.4	-	-	-	-	-	-
GYMP7-32(X/P)	0.63	0.4~0.63	-	-	-	-	-	0.37
GYMP7-32(X/P)	1	0.63~1	-	-	-	0.37	0.37	0.55
GYMP7-32(X/P)	1.6	1~1.6	-	0.37	-	0.55	0.75	1.1
GYMP7-32(X/P)	2.5	1.6~2.5	0.37	0.75	0.75	1.1	1.1	1.5
GYMP7-32(X/P)	4	2.5~4	0.75	1.5	1.5	1.5	2.2	3
GYMP7-32(X/P)	6.3	4~6.3	1.1	2.2	2.2	3	3.7	4
GYMP7-32(X/P)	10	6~10	2.2	4	4	4	5.5	7.5
GYMP7-32(X/P)	14	9~14	3	5.5	5.5	7.5	7.5	9
GYMP7-32(X/P)	18	13~18	4	7.5	9	9	9	11
GYMP7-32(X/P)	23	17~23	5.5	11	11	11	11	15
GYMP7-32(X/P)	25	20~25	5.5	11	11	11	15	18.5
GYMP7-32(X/P)	32	24~32	7.5	15	15	15	18.5	22
GYMP7-80	25	16~25	-	11	11	-	-	18.5
GYMP7-80	40	25~40	-	18.5	18.5	-	-	30
GYMP7-80	63	40~63	-	30	30	-	-	45
GYMP7-80	80	56~80	-	37	37	-	-	55

9. 外壳防护等级为 IP20。

10. 断路器的操作性能见表 3。

9. The enclosure protection class is IP20.

10. The operating performance of the circuit breaker is shown in Table 3.

表 3 Table 3

型号 Type	壳架等级额定电流 Inm A Rack rated current Inm A	每小时操作循环次数 Hourly operation cycles	操作循环次数 Operation cycle number	
			电气寿命 Electrical life	机械寿命 Mechanical Life
GYMP7- 32(X/P)	32	120	10000	100000
GYMP7- 80	80	120	1500	8500

过电流动作保护特性

11. 断路器各相平衡及不平衡负载时的动作特性见表 4、表 5、表 6。

Overcurrent action protection

11.The action characteristics of the circuit breaker when each phase equilibrium and unbalanced load are shown in table 4, table 5, table 6.

表 4 断路器各相平衡负载时的动作特性 (配电保护)

Table 4 Operating characteristics of the circuit breaker when the phases are balanced (Distribution protection)

表 4 Table 4

型号 Type	配电用断路器 Distribution breaker			周围空气温度 Circumstance temperature
	整定电流倍数 Setting current multiple	动作时间 Tripping time	起始状态 Status	
GYMP7- 32(X/P) GYMP7- 80	1.05	1h 内不动作 1h non-tripping	冷态开始 Initial	+20℃ ±2℃
	1.3	1h 内动作 1h tripping	接序 1 进行 Following serial 1	
	1.5	< 2min 动作 < 2min tripping		

表 5 断路器各相平衡负载时的动作特性 (电动机保护)

Table 5 Action characteristics of balanced load of each phase of the circuit breaker (Motor protection)

表 5 Table 5

型号 Type	保护电动机用断路器 Circuit breaker for protecting electric motor				周围空气温度 Circumstance temperature
	序号 Serial number	整定电流倍数 Setting current multiple	动作时间 Tripping time	起始状态 Status	
GYMP7- 32(X/P) GYMP7- 80	1	1.05	2h 内不动作 2h non-tripping	冷态开始 Initial	+20℃ ±2℃
	2	1.2	2h 内动作 2h tripping	接序 1 进行 Following serial 1	
	3	1.5	2min 内动作 Action within 2 minutes		
	4	7.2	2 ~ 10s 动作 2~10s 2h tripping	冷态开始 Initial	

表 6 断路器各相负载不平衡时（断相）的动作特征

Table 6 The action characteristics of the circuit breaker when the load is unbalanced (phase break)

表 6 Table 6

型号 Type	整定电流倍数 Setting current multiple		起始状态 Start status	规定时间 Specified time	预期结果 Expected results	周围空气温度 Circumstance temperature
	任意二相 Any two-phase	第三相 Third phase				
GYMP7- 32(X/P)	1.0	0.9	冷态 Cold state	t ≥ 2h	不脱扣 Does not trip	+20℃ ±2℃
GYMP7- 80	1.15	0	热态（紧接序 1 进行） Thermal state (In immediate order 1.)	t<2h	脱扣 Trip	

12. 短路器瞬时电磁脱扣动作特性，见表 7

The instantaneous electromagnetic buckle action characteristics of short circuit device are shown in table 7

表 7 Table 7

型号 Type	试验电流 Test current	起始状态 Start status	规定时间 Specified time	预期结果 Expected results	周围空气温度 Circumstance temperature
GYMP7- 32(X/P)	0.8×12×In	冷态 Cold state	t ≥ 0.2s	不脱扣 Does not trip	+20℃ ±5℃
GYMP7- 80	1.2×12×In	冷态 Cold state	t < 0.2s	脱扣 Trip	+20℃ ±5℃

13. 后备熔断器的选用：

当安装地点预期短路电流大于起动器预定极限短路分断能力时，后备短路保护熔断器的型式及熔体电流规格见下表 8。

例如可选用使用类别为 gG 型的熔断器 RT16(NT00)。

Selection of backup fuse:

When the expected short-circuit current at the installation site is greater than the starter's predetermined limit short-circuit breaking capacity, the type and melt current specifications of the backup short-circuit protection fuse are shown in table 8 below.

For example, you can choose to use a type of gG fuse RT16 (NT00).

表 8 Table 8

型号 Type	脱扣器额定电流 In(A) Fastener rated current in (A)	整定电流调节范围 (A) Tuning current adjustment range (A)	只有当预期短路电流 Icc>Icu 额定极限短路分断能力时需要备用熔断器的熔体电流规格 The melt current specification of the spare fuse is required only if the expected short-circuit current Icc>Icu The rated limit short-circuit breaking capacity									
			230/240V		400/415V		400V		500V		690V	
			aM A	gL/gG A	aM A	gL/gG A	aM A	gL/gG A	aM A	gL/gG A	aM A	gL/gG A
GYMP7-32(X/P)	0.16	0.1~0.16	★	★	★	★	★	★	★	★	★	★
GYMP7-32(X/P)	0.25	0.16~0.25	★	★	★	★	★	★	★	★	★	★
GYMP7-32(X/P)	0.4	0.25~0.4	★	★	★	★	★	★	★	★	★	★
GYMP7-32(X/P)	0.63	0.4~0.63	★	★	★	★	★	★	★	★	★	★
GYMP7-32(X/P)	1	0.63~1	★	★	★	★	★	★	★	★	★	★
GYMP7-32(X/P)	1.6	1~1.6	★	★	★	★	★	★	★	★	★	★
GYMP7-32(X/P)	2.5	1.6~2.5	★	★	★	★	★	★	★	★	16	20
GYMP7-32(X/P)	4	2.5~4	★	★	★	★	★	★	★	★	25	32
GYMP7-32(X/P)	6.3	4~6.3	★	★	★	★	50	63	50	63	32	40
GYMP7-32(X/P)	10	6~10	★	★	★	★	50	63	50	63	32	40
GYMP7-32(X/P)	14	9~14	★	★	63	80	50	63	50	63	40	50
GYMP7-32(X/P)	18	13~18	★	★	63	80	50	63	50	63	40	50
GYMP7-32(X/P)	23	17~23	80	100	80	100	63	80	50	63	40	50
GYMP7-32(X/P)	25	20~25	80	100	80	100	63	80	50	63	40	50
GYMP7-32(X/P)	32	24~32	80	100	80	100	63	80	50	63	40	50
GYMP7-80	25	16~25	-	-	250	315	-	-	-	-	160	200
GYMP7-80	40	25~40	-	-	250	315	-	-	-	-	160	200
GYMP7-80	63	40~63	-	-	315	400	-	-	-	-	200	250
GYMP7-80	80	56~80	-	-	315	400	-	-	-	-	200	250

其他附件 Other Accessories

1. 断路器的附件 Accessories for starters

1.1 附件种类，型号及规格见下表 Annex types, models and specifications are shown in the table below

附件名称 Attachment Name	GYMP7-32（X） 适用 Apply	SDM-80 适用 Apply	附件规格 Accessory Specifications
欠压脱扣器 Undervoltage Stripper	GYMP7-AU110	-	110~150V，50Hz；127V,60Hz
	GYMP7-AU220	-	220~240V,50Hz
	GYMP7-AU380	-	380~400V,50Hz；440V,60Hz
分励脱扣器 Split excitation Stripper	GYMP7-AS110	-	110~150V，50Hz；127V,60Hz
	GYMP7-AS220	-	220~240V,50Hz
	GYMP7-AS380	-	380~400V,50Hz；440V,60Hz
瞬时辅助触头（前挂） Instantaneous auxiliary contacts (front hanging)	GYMP7-AE20	-	2NO
	GYMP7-AE11	-	1NO+1NC
瞬时辅助触头（侧挂） Instantaneous auxiliary contacts (side hanging)	GYMP7-AN20	GYMP7-AN20(GYMP7-80)	2NO
	GYMP7-AN11	GYMP7-AN11(GYMP7-80)	1NO+1NC
故障信号触头 及瞬时辅助触头 Fault signal contacts and instantaneous auxiliary contacts	GYMP7-AD0110	-	-
	GYMP7-AD0101	-	-
	GYMP7-AD1010	-	-
	GYMP7-AD1001	-	-
防水安装盒 Waterproof mounting box	GYMP7 防水安装盒 Waterproof mounting box	-	-
带急停按钮的防水安装盒 Waterproof mounting box with emergency stop button	GYMP7 带急停按钮的防水安装盒Waterproof mounting box with emergency stop button	-	-

注：如需订购 GYMP7-80 配套的 GYMP7-AN 时，需注明为 GYMP7-80 专用，如 GYMP7-AN11(GYMP7-80)。
Note: If you want to order GYMP7-80 matching GYMP7-AN, you need to indicate that GYMP7-80 is dedicated, such as GYMP7-AN11 (GYMP7-80).

1.2 欠压脱扣器 GYMP7-AU110,AU220,AU380 的性能：

a. 额定绝缘电压 Ui(V)：690。

b. 动作特性：

当电压下降到额定电压的 70% 和 35% 范围内，欠压脱扣器应动作；欠压脱扣器在电源电压低于脱扣器额定电压的 35% 时，欠压脱扣器应能防止启动器闭合；电源电压等于或大于脱扣器额定电压的 85% 时，欠压脱扣器应能保证起动器闭合。

欠压脱扣器
Undervoltage release

1.2 Performance of the GYMP7-AU110,AU220,AU380 of the Undervoltage stripper:

a. Rated insulated voltage Ui (V): 690.

b. Motion Characteristics:

When the voltage drops to the range of 70% and 35% of the rated voltage, the undervoltage stripper shall act; The Undervoltage stripper shall be able to prevent the starter from closing when the supply voltage is less than 35% of the rated voltage of the stripper, and the undervoltage stripper shall be able to ensure the closure of the starter when the supply voltage is equal to or greater than 85% of the rated voltage

1.3 分励脱扣器 GYMP7-AS110,AS220,AS380 的性能：
a. 额定绝缘电压 Ui(V)：690
b. 动作特性：分励脱扣器的动作电压范围为额定工作电压的 70%~110%。

1.3Performance of the GYMP7-AS110,AS220,AS380 of the split-excitation stripper:
a.Rated insulated voltage Ui (V): 690
b.Motion characteristics: The operating voltage range of the split-excitation stripper is 70%~110% of the rated operating voltage.

分励脱扣器 Shunt release

1.4 瞬时辅助触头 GYMP7-AE20，AE11(前挂) 的性能：
a. 额定绝缘电压 Ui(V)：250；
b. 约定发热电流 Ith(A)：2.5；
c. 瞬时辅助触头的使用类别 ,额定工作电压及额定工作电流见下表。

1.4Performance of instantaneous auxiliary contact GYMP7-AE20,AE11 (front hanging):
a.Rated insulated voltage Ui (V): 250;
b.Agreed heating current Ith (A): 2.5;
c.The use category of instantaneous auxiliary contacts, rated operating voltage and rated operating current are shown in the table below.

瞬时辅助触头
Upper auxiliary
AE-11, AE-20

使用类别 Working with categories	AC-15				DC-13		
额定工作电压 UE(V) Rated operating voltage UE (V)	24	48	110/127	230/240	24	48	60
额定工作电流 Ie(A) Rated operating current Ie (A)	2	1.25	1	0.5	1	0.3	0.15
正常工作功率 P(W) Normal working power P (W)	48	60	127	120	24	15	9

1.5 瞬时辅助触头 GYMP7-AN20，AN11(侧挂) 的性能：
a. 额定绝缘电压 Ui(V)：690；
b. 约定发热电流 Ith(A)：6；
c. 瞬时辅助触头的使用类别 ,额定工作电压及额定工作电流见下表。

1.5Performance of instantaneous auxiliary contact GYMP7-AN20,AN11 (side hanging):
a.Rated insulated voltage Ui (V): 690;
b.Agreed heating current Ith (A): 6;
c.The use category of instantaneous auxiliary contacts, rated operating voltage and rated operating current are shown in the table below.

辅助触头 Side auxiliary
AN-11, AN-20

使用类别 Working with categories	AC-15							DC-13				
额定工作电压 UE(V) Rated operating voltage UE (V)	48	100/127	230/240	380/415	440	500	690	24	48	60	110	220
额定工作电流 Ie(A) Rated operating current Ie (A)	6	4.5	3.3	2.2	1.5	1	0.6	6	5	3	1.3	0.5
正常工作功率 P(W) Normal working power P (W)	300	500	720	850	650	500	400	140	240	180	140	120

1.6 故障信号触头及瞬时辅助触头 GYMP7-AD 的性能：
故障信号触头及瞬时辅助触头GYMP7-AD由故障信号触头和瞬时辅助触头组成，其使用类别和性能有所不同。

a. 额定绝缘电压 Ui(V):690;
b. 瞬时辅助触头的约定发热电流 Ith(A)：6；故障信号触头的约定发热电流 Ith(A)：2.5；
c. 瞬时辅助触头的使用类别，额定工作电压及额定工作电流见上表，与 GYMP7-AN 瞬时辅助触头的性能相同；
故障信号触头的使用类别，额定工作电压及额定工作电流见下表。

报警 + 辅助触头
Fault signal+Instantaneous auxiliary
AD1001, AD1010
AD0101, AD0110

1.6 Performance of fault signal contacts and instantaneous auxiliary contacts GYMP7-AD:
Fault signal contacts and instantaneous auxiliary contacts GYMP7-AD consist of fault signal contacts and instantaneous auxiliary contacts, and their use categories and performance are different.

a. Rated insulated voltage Ui (V): 690;
b. The agreed heating current of the instantaneous auxiliary contact Ith (A): 6;
The agreed heating current of the fault signal contact Ith (A): 2.5;
c. The use category of instantaneous auxiliary contacts, rated operating voltage and rated operating current are shown in the table above, with the same performance as the GYMP7-AN instantaneous auxiliary contact; The use category of the fault signal contact, the rated operating voltage and the rated operating current are shown in the table below.

使用类别 Working with categories	AC-14				DC-13		
额定工作电压 Rated operating voltage UE(V)	24	48	110/127	230/240	24	48	60
额定工作电流 Ie(A) Rated operating current Ie (A)	1.5	1	0.5	0.3	1	0.3	0.15
正常工作功率 P(W) Normal working power P (W)	36	48	72	72	24	15	9
操作性能 (次) Operating Performance (Times)	1000	1000	1000	1000	1000	1000	1000

1.7 故障信号触头与瞬时辅助触头的非正常接通与分断能力见下表

1.7 The abnormal connection and breaking ability of fault signal contacts and instantaneous auxiliary contacts are shown in the following table

使用类别 Working with categories	接通 Connected			分断 Division			通断操作循环次数和操作频率 Number of cycles and operating frequencies of the pass-through operation		
	I/Ie	U/UE	cosΦ 或 or T0.95	I/Ie	U/UE	cosΦ 或 or T0.95	操作循环次数 Number of Operation Loops	每分钟操作 循环次数 Number of operation cycles per minute	通电时间 Electrified time
AC-14	6	1.1	0.7	6	1.1	0.7	10	2	0.05
AC-15	10	1.1	0.3	10	1.1	0.3	10	2	0.05
DC-13	1.1	1.1	6Pe	1.1	1.1	6Pe	10	2	0.05

1.8 GYMP7-32 防水安装盒 Waterproof mounting box

	附件名称 Attachment Name	防护等级 Protection class
	GYMP7-32(X) 防水安装盒 Waterproof mounting box	IP55
	GYMP7-32(X) 带急停按钮的防水安装盒 Waterproof mounting box with emergency stop button	IP55

1.9 GYMP7-32 连接器 Waterproof mounting box

	附件名称 Attachment Name	配合方式 How to cooperate
	GYMP7-32(X/P) 连接器Connector	与 LC1D 接触器配用 For use with LC1D contactor

2.0 GYMP7-32P 旋钮式产品加长手柄 Knob type product extension handle

附件型号 Attachment model	组成部件 Components	操作功能说明 Operating Function Description
		手柄：可用挂锁锁定 off 位置，IP42。 Handle: Padlock can be used to lock the off position, IP42.
	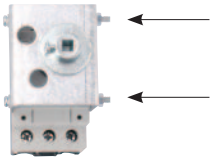	固定座：通过拧紧箭头指示的两颗螺帽对其进行固定。 Fixed seat: Fix it by tightening the two nuts indicated by the arrows.
GYMP7-32P 加长手柄 GYMP7-32P extended handle		加长杆：按最长 350mm 标准制作， 客户可根据实际情况对粗的一侧头部进行截断使用。 Extension rod: Made according to the maximum length of 350mm standard, customers can cut and use the thick head on one side according to the actual situation.

2.0 附件安装位置和外形尺寸
Accessory mounting position and dimensions

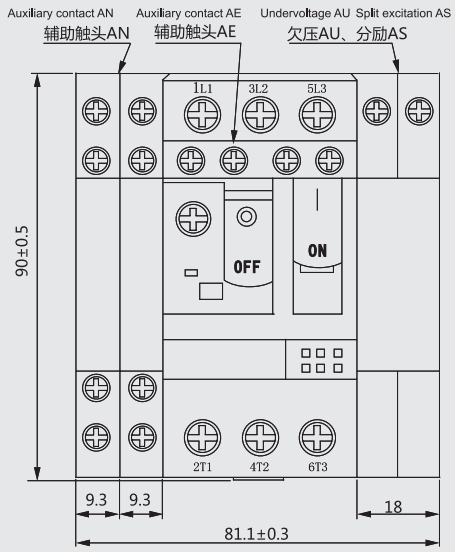

2.1 连接器外形尺寸 Waterproof mounting box dimensions

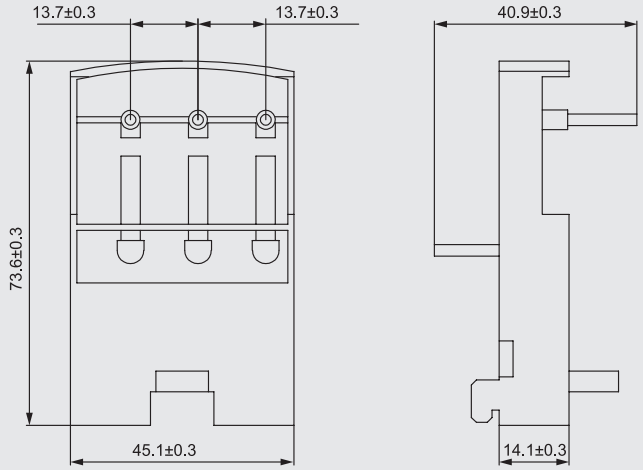

外形及安装尺寸 Shape and installation dimensions

1 产品外形尺寸及安装尺寸 Product Dimensions and mounting dimensions

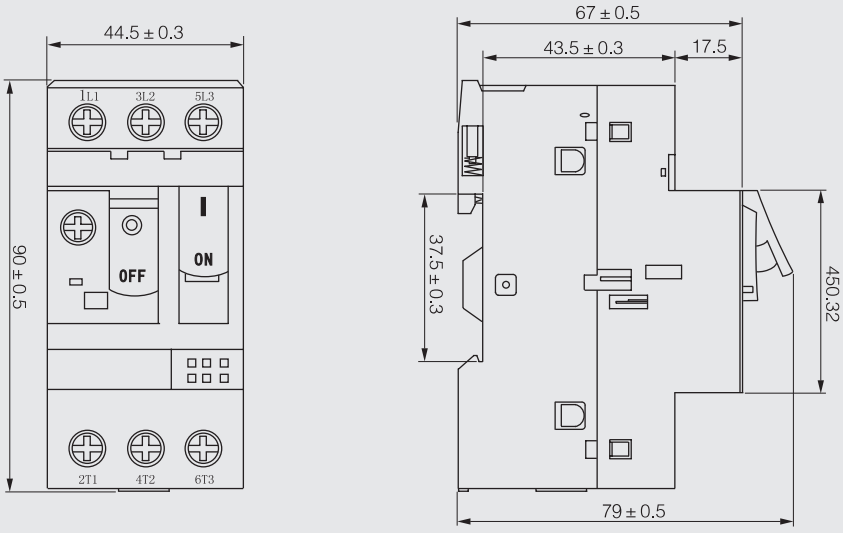

GYMP7-32(X)

外形及安装尺寸 Shape and installation dimensions

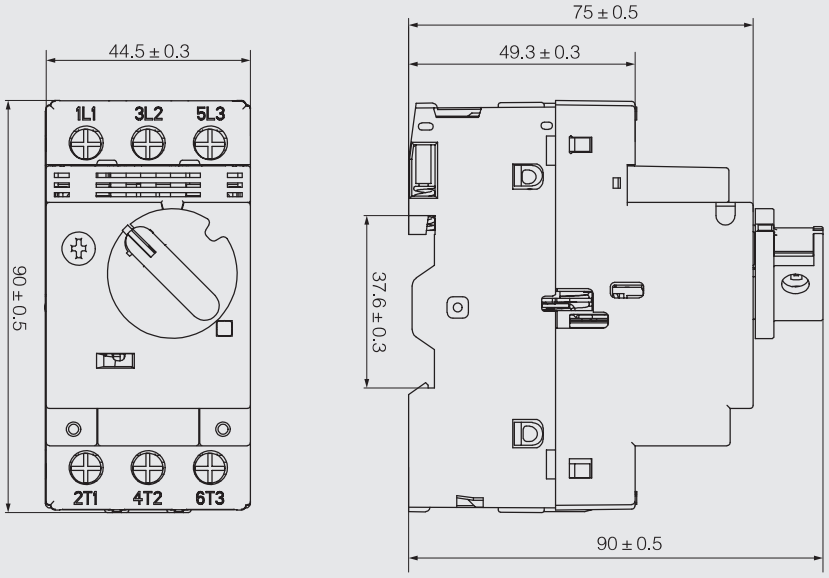

GYMP7-32P

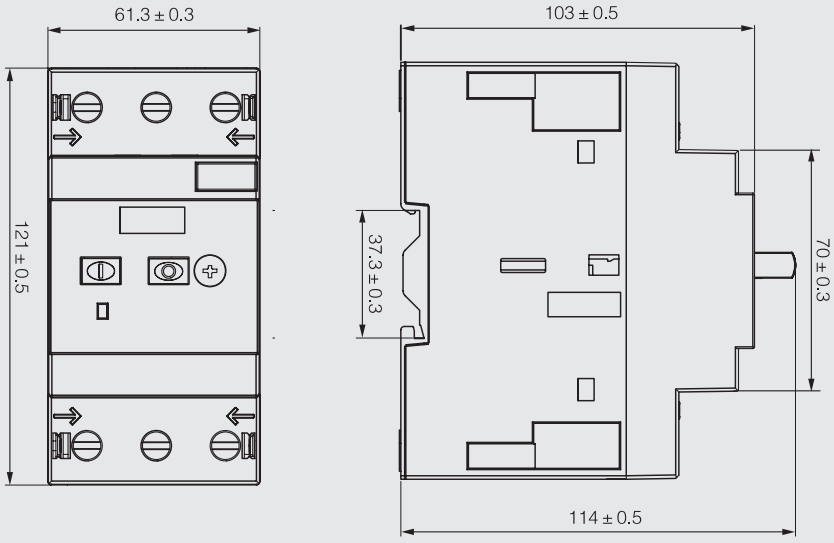

GYMP7-80

2 防水盒外形尺寸 Waterproof box Dimensions

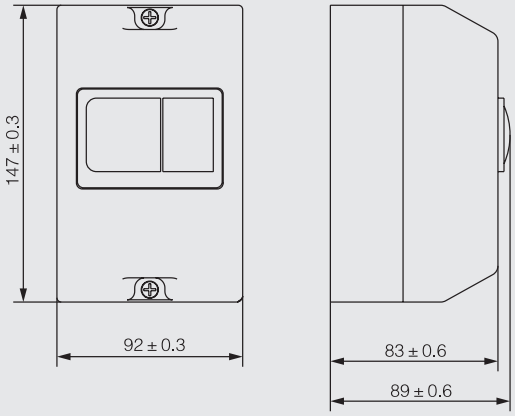

GYMP7-32(X) 防水安装盒
Waterproof mounting box

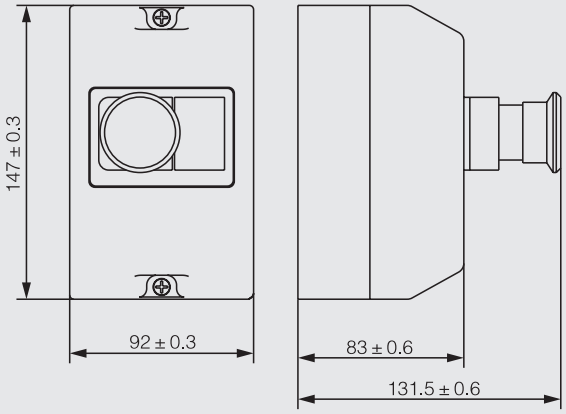

GYMP7-32(X) 带急停按钮的防水安装盒Waterproof mounting box with emergency stop button

3 旋钮式产品加长手柄尺寸图 Dimensional drawing of knob type product extension handle

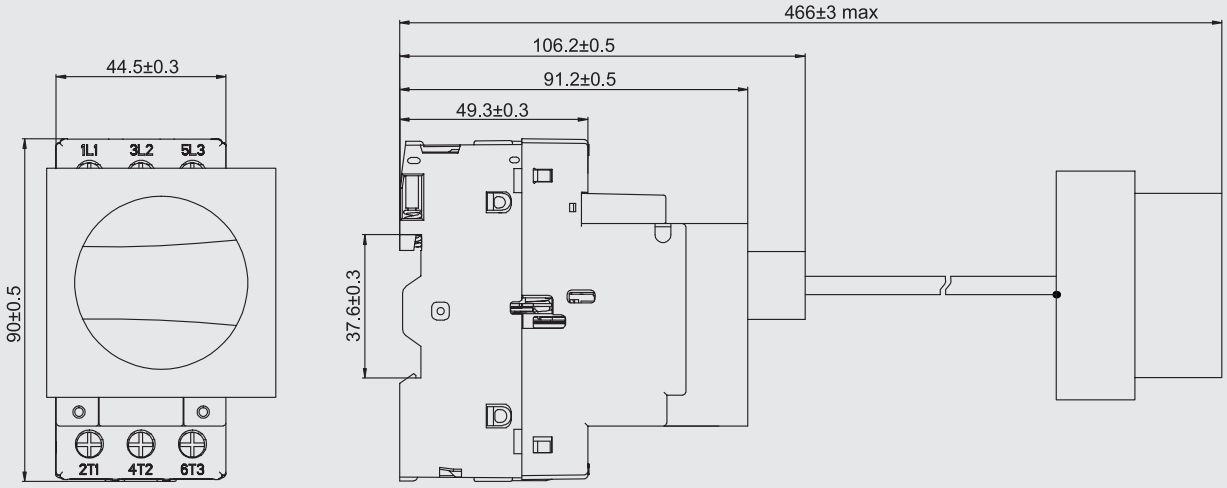

GYMP7-32P AP02 钮式产品加长手柄
GYMP7-32P AP02 Button Product Extended Handle