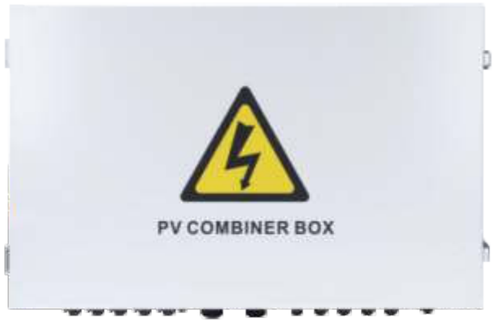

GYPV/8-1 DC

Combiner Box

Overview

High reliability
With DC FUSE
With DC Surge Protection Device
With DC Circuit breaker or DC load isolation switch.

Strong adaptability
IP65 design, waterproof, anti dust and anti ultraviolet.
Strict test for high and low temperature, used widely.
The simple installation, the simplified system wiring, the convenient wiring.
The box body is made of cold rolled steel and other metal materials.

Flexible configuration
Used for single crystal silicon solar modules, polycrystalline silicon solar modules, thin film solar modules. Current rating of the photovoltaic fuse, circuit breaker, load isolation switch is modifed.

Description

GYPV/8-1 PV combiner box bus synthetic DC input of 8 PV components to 1 output. Each channel is with a fuse. Output side is equipped with lightning protection and circuit breaker. It greatly simplify input wiring of DC power distribution cabinet and inverter. Realize lightning protection, short circuit protection and grounding protection. PV combiner box divided into two types: intelligent box and non-intelligent box. Intelligent PV combiner box is equipped with monitoring unit, then detect input current of each string, detect inside temperature, detect lightning protection status, detect circuit breaker status and summarize output voltage and so on.
Design and configuration strictly accordance with the “Technical specification for photovoltaic junction equipment” CGC/GF 037:2014. Provide users with a safe, brief, beautiful and applicable photovoltaic system products.
The product adopts outdoor wall mounted type, which adapt to the harsh environment. In addition to the core components, the other can be customized by user requirements.

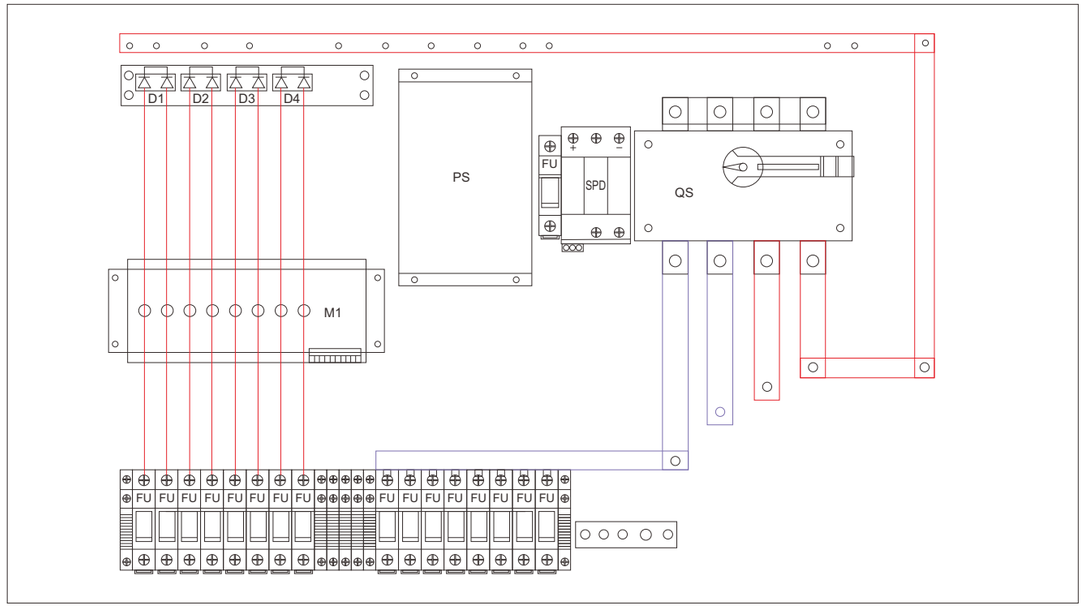

Data

Electric parameter	
System maximum dc voltage	1000
Maximum input current for each string	15A
Maximum input strings	8
Maximum output switch current	125A
Number of inverter MPPT	1
Number of output strings	1
Lightning protection	
Category of test	II Grade protection
Nominal discharge current	20kA
Maximum discharge current	40kA
Voltage protection level	3.8kV
Maximum continuous operating voltage Uc	1050V
Poles	3P
Structure characteristic	Plug-push module
System	
Protection grade	IP65
Output switch	DC isolation switch (standard)/DC circuit breaker(optional)
MC4R waterproof connectors	Standard
PV DC fuse	Standard
PV surge protector	Standard
Monitoring module	Optional
Preventing diode	Optional
Box material	PVC
Installation method	Wall mounting type
Operating Temperature	-25℃ ~+55℃
Elevation of temperature	2km
Permissible relative humidity	0-95%, no condensation
Mechanical parameter	
Width x High x Depth(mm)	500 x 400 x190
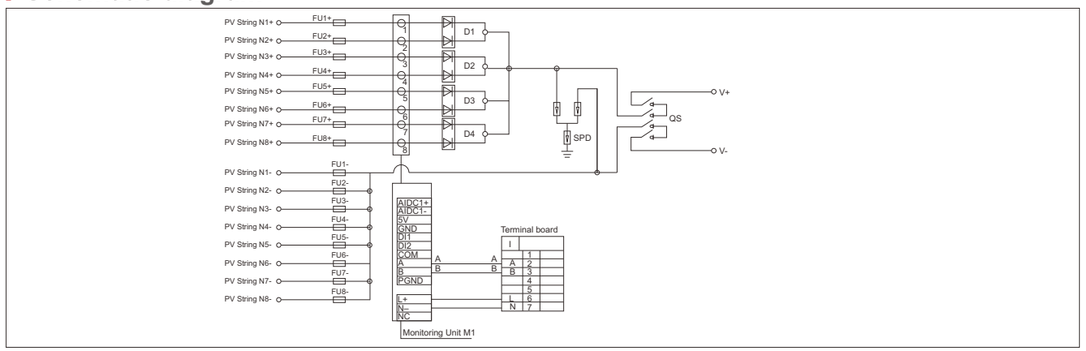
Schematic diagram