GYW6

万能式断路器

GYW6 Series Universal
Circuit Breaker

至高至上 · 大展宏图

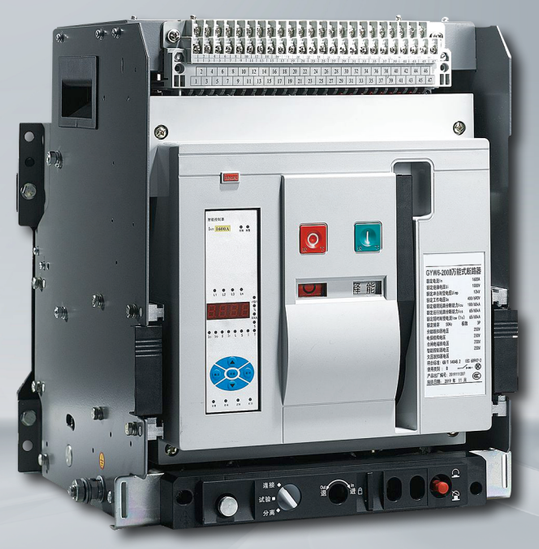

- 温升低
  Low temperature rise
- 小体积
  Small volume
- 一体化
  Integration
- 采用多把触刀设计
  Adopting multiple contact knife designs
- 具有热磁式保护功能
  Equipped with thermal magnetic protection function

用途及适用范围
Purpose and Scope of Application

GYW6 系列智能型万能式断路器（以下简称断路器），适用于交流 50Hz，额定电压至 AC690V 及以下，额定电流从 200A~6300A 的配电网络中，用来分配电能和保护线路及电源设备免受过、欠压、短路、单相接地等故障的危害。断路器具有智能化保护功能，选择型保护精确，能提高供电可靠性，避免不必要的停电。同时带有开放式通讯接口，可进行“四遥”，以满足控制中心和自动化系统的要求。断路器在海拔 2000 米时脉冲耐压 8000V，（不同海拔按标准修正，最高不超过 12000V）。该断路器不带智能控制器及传感器可作隔离用，标识为 ____/ ⊢⋊⊢ 。
断路器符合标准 GB/T14048.2 及 IEC60947-2《低压开关设备和控制设备第 2 部分断路器》。

The GYW6 series intelligent universal circuit breaker (hereinafter referred to as the circuit breaker) is suitable for distribution networks with AC 50Hz, rated voltage up to AC690V and below, and rated current ranging from 200A to 6300A. It is used to distribute electrical energy and protect lines and power equipment from the hazards of under voltage, short circuit, single-phase grounding, and other faults. The circuit breaker has intelligent protection function and precise selective protection, which can improve power supply reliability and avoid unnecessary power outages. At the same time, it has an open communication interface and can be used for ”four remotes” to meet the requirements of the control center and automation system. The circuit breaker has a pulse withstand voltage of 8000V at an altitude of 2000 meters (corrected according to standards for different altitudes, with a maximum voltage not exceeding 12000V). This circuit breaker does not come with an intelligent controller or sensor and can be used for isolation, marked as ____/ ⊢⋊⊢ .
The circuit breaker complies with the standards GB/T14048.2 and IEC60947-2 ”Low voltage switchgear and control equipment – Part 2: Circuit breakers”.

型号及含义
Model and meaning

GY	W	6	2500	3P
企业代号 Enterprise code	万能式断路器 Universal circuit breaker	设计序号 Design serial number	断路器壳架等级 Circuit breaker housing level	极数 （3 表示三极、4 表示四极） Number of poles (3 represents three poles, 4 represents four poles)

分类
Classification

按安装方式分	Classified by installation method
a. 抽屉式	a. Drawer style
b. 固定式	b. Fixed
按极数分：三极、四极	Divided by number of poles: three poles, four poles
按操作方式分	Divided by operation method
a. 电动操作	a. Electric operation
b. 手动操作（检修、维护用）	b. Manual operation (for maintenance and repair)

脱扣器种类
Release type

智能控制器、欠压瞬时（延时）脱扣器、分励脱扣器
Intelligent controller, undervoltage instantaneous (delay) release, shunt release

智能控制器性能
Intelligent controller performance

a. 智能控制器分为：2M 型（普通智能型）、2H 型（通讯型）、3M（液晶型）、3H（液晶通讯型）
b. 具有过载长延时反时限、短延时反时限、定时限、瞬时功能。可由用户自行设定组成所需要的保护特性；
c. 单相接地保护功能；
d. 显示功能：电流显示、电压显示（在订货时备注说明）；
e. 报警功能：过载报警；
f. 自检功能：过热自检、微机自诊断；
g. 试验功能：试验控制器的动作特性。
a. Intelligent controllers are divided into: 2M type (ordinary intelligent type), 2H type (communication type), 3M (liquid crystal type), and 3H (liquid crystal communication type)
b. Equipped with overload long delay inverse time limit, short delay inverse time limit, timing limit, and instantaneous functions. The required protection characteristics can be set by the user;
c. Single phase grounding protection function;
d. Display function: current display, voltage display (note instructions when ordering);
e. Alarm function: overload alarm;
f. Self inspection function: overheating self inspection, microcomputer self diagnosis;
g. Test function: Test the action characteristics of the controller.

周围空气温度
Ambient air temperature

上限值不超过 +70℃，下限值不低于 −25℃，24h 平均值不超过 +40℃。
注：上限值超过 +40℃或下限值低于 −10℃或 −25℃的工作条件，用户应向本公司声明并协商；
安装地点的海拔不超过 2000 米。

The upper limit value shall not exceed+70 ℃ , the lower limit value shall not be lower than −25 ℃ , and the 24-hour average value shall not exceed+40 ℃ .
Note: For working conditions with an upper limit value exceeding+40 ℃ or a lower limit value below −10 ℃ or −25 ℃ , users should declare and negotiate with our company;
The elevation of the installation site shall not exceed 2000 meters.

大气条件
大气相对湿度在周围空气为 +40℃时不超过 50%，在较低温度下可以有较高的相对湿度，最湿月的平均最大相对湿度为 90%，同时该月的平均最低温度为 +25℃，并考虑到因温度变化发生在产品表面上的凝露，超过规定要求时应与本公司协商。
防护等级：IP30
污染等级：III
使用类别：B 类
安装类别：额定工作电压 690V 及以下的断路器以及欠压脱扣器，电源变压器初级线圈用于安装类别IV；辅助电路及控制电路安装类别为 I。

Atmospheric conditions
The relative humidity of the atmosphere should not exceed 50% when the surrounding air is+40 ℃ . In lower temperatures, there can be higher relative humidity. The average maximum relative humidity in the wettest month is 90%, and the average minimum temperature in that month is+25 ℃ . Considering the condensation on the product surface due to temperature changes, if it exceeds the specified requirements, it should be negotiated with our company.
Protection level: IP30
Pollution level: III
Usage category: Class B
Installation category: Circuit breakers and undervoltage releases with rated working voltage of 690V and below, and primary coils of power transformers for installation category IV; The installation category of auxiliary and control circuits is I.

结构简介
Structure Overview

安装条件
断路器应按本说明书要求安装，断路器的垂直倾斜度不超过 5 度（矿用断路器的倾斜度不超过 15 度 ）
断路器的正面指示
Installation conditions
The circuit breaker should be installed according to the requirements of this manual, and the vertical inclination of the circuit breaker should not exceed 5 degrees (the inclination of mining circuit breakers should not exceed 15 degrees)
Front indication of circuit breaker

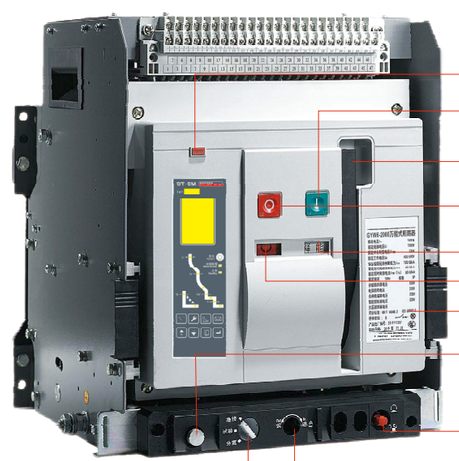

故障跳闸指示/复位按钮	Fault trip indicator/reset button
合闸按钮	Switch-on button
手动储能手柄	Manual energy storage handle
分闸按钮	Switch-off button
储能释能指示	Energy storage and release indicator
合闸分闸指示	Switch-on/off indicator
铭牌	Nameplate
摇手柄及其存放处	Jiggle bar and storage location
三位置锁	Three-position lock
开关摇进摇出装置	Switch in/out rocker
位置指示	Position indication

安装前准备
Preparation before installation

安装前用 500VDC 兆欧表按规定检查断路器绝缘电阻，在周围温度 25℃ ±5℃和相对湿试 50%~70% 应不小于 500MΩ。

绝缘电阻测试部位为：断路器闭合时，各相以及地之间；断路器断开时，各相及各极之间。

Before installation, use a 500VDC megohmmeter to check the insulation resistance of the circuit breaker according to regulations. At an ambient temperature of 25 ℃ ± 5 ℃ and a relative humidity test of 50%~70%, it should not be less than 500MΩ.

The insulation resistance testing position is: when the circuit breaker is closed, between each phase and ground; When the circuit breaker is disconnected, between each phase and each pole.

断路器结构
Circuit breaker structure

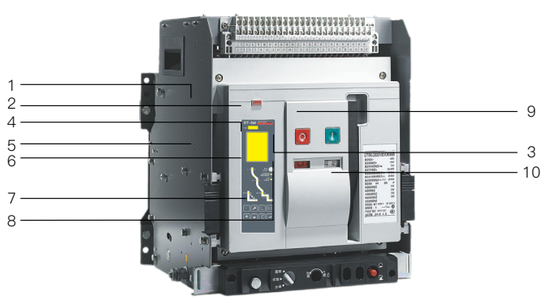

①	②	③	④	⑤	⑥	⑦	⑧	⑨	⑩
故障脱扣复位按钮 Fault tripping Reset button	分闸位置锁 Opening position lock	合闸按钮(I) Closing button (I)	分闸按钮(0) Opening button (0)	智能控制单元 Intelligent control unit	断路器主触头位置指示 1：合闸 O：分闸 Circuit breaker main contact position indication 1: Closing O: Opening	断路器可合闸指示 Circuit breaker closing indication	断路器储能/释能指示 Circuit breaker energy storage/ release indication	手动储能手柄 Manual energy storage handle	断路器技术参数 Circuit breaker technical parameter

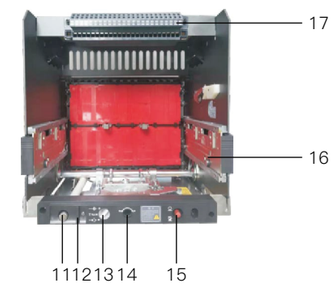

⑪	⑫	⑬	⑭	⑮	⑯	⑰
摇柄及存放孔 (仅适用于抽屉式) Rocker handle and storage hole (Applicable only to drawer type)	抽屉式“分离”位置安全挂锁 Drawer type ”separation” position Safety padlock	断路器“分离”“实验”“连接”位置指示器 Circuit breaker ’separation’ Experiment Connection Location indicator	摇柄工作孔 Rocker working hole	三位置锁扣复位按钮 Three position latch reset button	滑轨 (仅适用抽屉式) Slide rail (Drawer style only)	控制回路接线端子 (静) Control circuit wiring terminal (static)

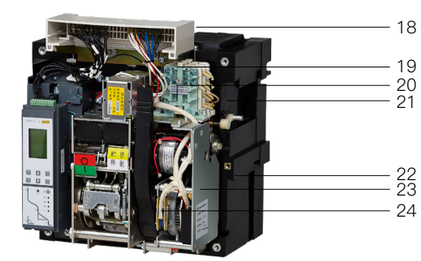

⑱	⑲	⑳	㉑	㉒	㉓	㉔
控制回路接线端子 (动) Control circuit wiring terminal (dynamic)	分励脱扣器 shunt release	合闸电磁铁 closing electromagnet	辅助开关 AUXILIARY switch	电动机储能电机 Electric motor energy storage motor	手动储能手柄 Manual energy storage handle	操作机构 Operating mechanism

主要技术数据及性能指标
Main technical data and performance indicators

型号 Model			GYW6-1600	GYW6-2500	GYW6-3200	GYW6-4000	GYW6-6300
壳架等级额定电流Inm (A) Rated current of shell frame level Inm (A)			1600	2500	3200	3200	6300
额定工作电流In (A) Rated working current In (A)			200A,400A,630A, 800A,1000A, 1250A,1600A	400,630A,800A, 1000A,1250A,1600A, 2000A,2500A	2000A,2500A, 2900A,3200A,	3200A，3600A, 4000A	4000A,5000A,6300A
额定工作电压Ue (V) Rated working voltage Ue (V)			50Hz AC400V,690V	50Hz AC400V.690V	50Hz AC400V,690V	50Hz AC400V	50Hz AC400V
额定绝缘电压Ui (V) Rated insulation voltage Ui (V)			1000v	1000v	1000v	1000v	1000v
额定冲击耐受电压Uimp (kV) Rated impulse withstand voltage Uimp (kV)			12	12	12	12	12
工频耐受电压U (V)1min Power frequency withstand voltage U (V) 1min			AC50Hz 3500	AC50Hz 3500	AC50Hz 3500	AC50Hz 3500	AC50Hz 3500
极数 Number of poles			3P/4P	3P/4P	3P/4P	3P/4P	3P
额定极限短路分断能力(有效值) Icu(kA) Rated limit short circuit breaking capacity (effective value) Icu (kA)	400v		70	100	100	100	120
	690v		50	65	65		100
额定极限短路分断能力(有效值) Icu(kA) Rated limit short circuit breaking capacity (effective value) Icu (kA)	400v		70	65	80	100	150
	690v		42	65	65		
额定短时耐受电流(1s) (有效值)Icw(kA) Rated short time Withstand current (1s) (Effective value) Icw (kA)	400v		50	65	80	80	150
	690v		42	65	65		
全力断时间(无附加延时)（ms) Full power interruption time (without additional delay) (ms)			12~18	12~18	12~18	12~18	12~18
闭合时间(ms) Closing time (ms)			≤60	≤60	≤60	≤60	≤60
操作性能 Operational performance	电寿命(次) Electrical life (times)		2000	2000	2000	2000	2000
	机械寿命(次) Mechanical life (times)	免维护 maintenance-free	10000	10000	10000	10000	10000
		有维护 With maintenance	20000	20000	20000	20000	20000

断路器在不同环境温度下的额定持续电流变动
Rated continuous current variation of circuit breakers at different ambient temperatures

额定电流 Rated current / 环境温度℃ Environmental temperature ℃	200A	400A	630A	800A	1000A	1250A	1600A	2000A	2500A
40	200A	400A	630A	800A	1000A	1250A	1600A	2000A	2500A
45	200A	400A	630A	800A	1000A	1250A	1550A	1900A	2400A
50	200A	400A	630A	800A	1000A	1250A	1500A	1850A	2300A
55	200A	400A	630A	800A	1000A	1200A	1400A	1800A	2200A
60	200A	400A	630A	800A	1000A	1150A	1300A	1700A	2100A

注：3200A及以上降容系数为0.9，其中6300壳架中的4000A不降容。
Note: The derating coefficient for 3200A and above is 0.9, with 4000A in the 6300 shell frame not derated.

过电流保护功能
Overcurrent protection function

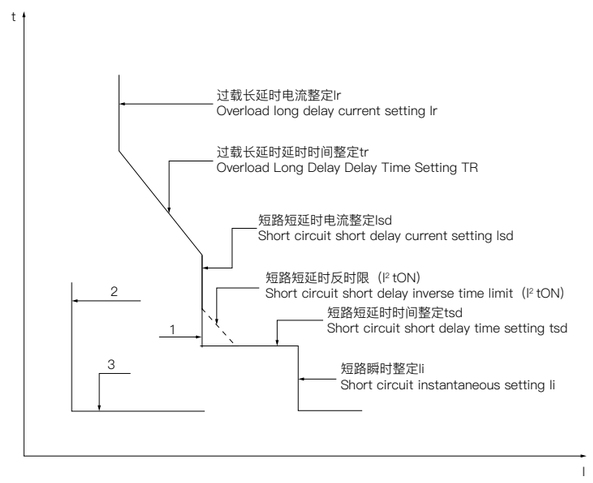

1.短路延时定时限（I^2_{toFF}）
2.接地故障电流整定I_g
3.接地故障延时时间t_g

过载长延时保护 Overload long delay protection	短路短延时保护(可关断-OFF) Short circuit short delay protection (can be turned off OFF)	短路瞬时保护 Short circuit instantaneous protection	短路故障保护(可断-OFF) Short circuit fault protection (interruptible OFF)
过载长延时反时限保护， 整定电流I，可调； 过载长延时延时时间t，可调。 Overload long delay inverse time protection, Setting current I, adjustable; Overload long delay time t, adjustable.	短路短延时反时限保护（I2roN)， 整定电流Isa可调； 短路短延时延时时间tsa可调 Short circuit short delay inverse time protection (I2roN), Adjustable setting current Isa; Short circuit short delay delay time tsa adjustable	短路瞬时（可关断-OFF) 速写电流Ii可调 Short circuit instantaneous (can be turned off OFF) Adjustable sketch current Ii	接地故障定时限或反时限保护， 整定电流Ic可调； 延时时间tg可调； 延时时间OFF后只报警不分断。 Earth fault definite time or inverse time protection, Adjustable setting current Ic; The delay time tg is adjustable; After the delay time is OFF, only the alarm will not break.

负载监控功能
Load monitoring function

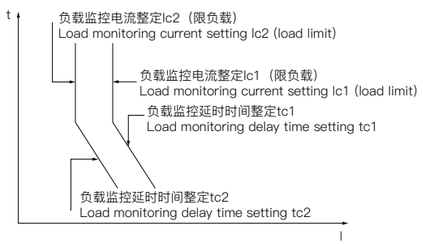

两种负载极限整定值的动作特性
Action characteristics of two load limit setting values

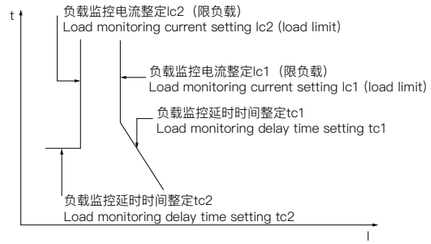

一种负载极限，一种重新加载整定值的动作特性
A load limit, an action characteristic for reloading the set value

附件
Annex

用于监控下级不重要负载，保证主系统供电；
负载监控有两种方式可选，用户任选其一。负载监控电流整定值为 Ic1 及 Ic2，一般取 Ic1 ⩾ Ic2；
方式一：可控制两路下级负载，当主电路运行电流先后超过 Ic1、Ic2 时，分别延时 tc1、tc2 后发出接点信号，控制器发出指令分断两路受控负荷。
方式二：只控制一路下级负载，当主电路运行电流超过 Ic1 时，延时 Tc 后发出触点信号，控制器发出指令分断此路负载。如果分断此路负载后，主电路运行电流低于 Ic2 且持续时间 tc2 后，控制器可再发出信号，指令接通已分断的负载（重新加载），恢复该负载供电。
与 Ic1、Ic2 相对应的负载监控信号（1）、（2）分别通过断路器二次回路接线端子输出接点信号，信号发出时同时由智智控制器的发光二极管指示。
Used to monitor subordinate unimportant loads and ensure power supply to the main system;
There are two options for load monitoring, and users can choose either one. The setting values of load monitoring current are Ic1 and Ic2, generally Ic1 ⩾ Ic2;
Method 1: It can control two lower level loads. When the operating current of the main circuit exceeds Ic1 and Ic2 successively, it will delay tc1 and tc2 respectively and send out contact signals. The controller will issue instructions to break the two controlled loads.
Method 2: Only one lower level load is controlled. When the operating current of the main circuit exceeds Ic1, a contact signal is issued after a delay of Tc, and the controller sends a command to cut off this load. If the operating current of the main circuit is lower than Ic2 and the duration is tc2 after cutting off this load, the controller can send another signal to command the disconnected load to be connected (reloaded) and restore the power supply to the load.
The load monitoring signals (1) and (2) corresponding to Ic1 and Ic2 are output through the secondary circuit terminal of the circuit breaker to output contact signals. When the signal is sent, it is also indicated by the LED of the intelligent controller.

区域联锁
Regional interlocking

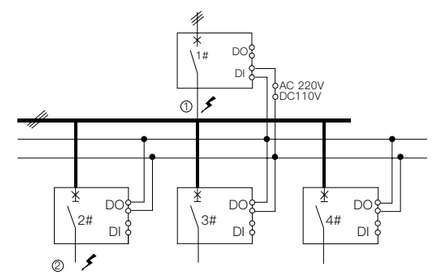

区域选择性联锁包括短路联锁和接地联锁。在两台或多台有上下级关联断路器的同一电力回路中：
当短路或接地故障发生的位置在下级断路（2#~4# 断路器）的出线侧（如位置②）时，下级断路器跳闸，并向上级断路器发出区域或联锁跳闸信号；上级断路器（1# 断路器）收到区域联锁跳闸信号，按短路或接地保护设定进行延时。若上级断路器延时过程故障电流被消除，则保护返回，上级断路器不动作；若下级断路器跳闸扣故障电流仍未消除。由上级断路器按短路或接地保护设定动作，切除故障线路。
当短路或接地故障发生的位置在上级断路器(1# 断路器)与下级断路器(2#~4# 断路器)之间（如位置①）时。上级断路器未收到区域联锁信号，因而瞬时跳闸，快速切除故障线路。
参数设置：
上级断路器至少有一路 DI 设为区域联锁检测；
下级断路器至少有一路 DO 设为区域联锁信号输出。
Regional selective interlocking includes short-circuit interlocking and grounding interlocking. In the same power circuit of two or more circuit breakers with hierarchical connections:
When a short circuit or grounding fault occurs at the outlet side of the lower circuit breaker (2 #~4 # circuit breaker) (such as position ②), the lower circuit breaker trips and sends a regional or interlocking trip signal to the upper circuit breaker; The superior circuit breaker (1 # circuit breaker) receives a regional interlocking trip signal and delays according to the short-circuit or grounding protection settings. If the fault current during the delay process of the superior circuit breaker is eliminated, the protection returns and the superior circuit breaker does not operate; If the fault current of the tripping trip of the lower circuit breaker has not been eliminated. The superior circuit breaker acts according to the short-circuit or grounding protection settings to cut off the faulty line.
When a short circuit or grounding fault occurs between the upper circuit breaker (1 # circuit breaker) and the lower circuit breaker (2 #~4 # circuit breakers) (such as position ①). The superior circuit breaker did not receive the regional interlocking signal, so it momentarily tripped and quickly cut off the faulty line.
Parameter settings:
At least one DI of the superior circuit breaker is set for regional interlocking detection;
At least one DO of the lower level circuit breaker is set as the regional interlocking signal output.

电压保护
Voltage protection

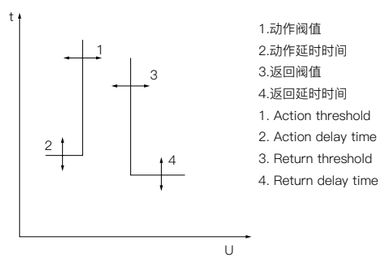

欠电压保护动作原则
Undervoltage protection action principle

欠压保护：
智能控制器测量一次回路电压的真有效值，当三个线电压都小于设定值时，即三个线电压的最大值小于欠压保护设定值时欠压保护动作；当三个线电压的最大值大于返回值时报警动作返回。
动作特性：当电压最大值小于动作阀值（1）时启动报警或跳闸延时，动作延时时间 (2) 到时发出报警或跳闸信号，欠压故障动作；当电压最大值大于返回阀值（3）时启动返回延时，当返回延时时间（4) 到时撤除报警，欠压故障返回。
Under voltage protection:
The intelligent controller measures the true effective value of the primary circuit voltage. When all three line voltages are less than the set value, that is, when the maximum value of the three line voltages is less than the set value of the undervoltage protection, the undervoltage protection acts; When the maximum value of the three line voltages is greater than the return value, the alarm action returns.
Action characteristics: When the maximum voltage is less than the action threshold (1), an alarm or trip delay is triggered. When the action delay time is (2), an alarm or trip signal is issued, and the undervoltage fault acts; When the maximum voltage value is greater than the return threshold (3), the return delay is activated. When the return delay time (4) expires, the alarm is removed and the undervoltage fault returns.

电压保护
Voltage protection

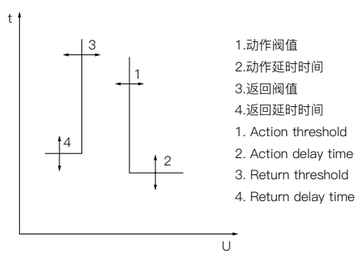

过电压保护动作原则
Overvoltage protection action principle

过压保护：
智能控制器测量一次回路电压的真有效值，当三个线电压都大于设定值时，即三个线电压的最小值大于过压保护设定值时过压保护动作；当三个线电压小于返回值时报警动作返回。
动作特性：最小线电压大于动作阀值（1）时启动报警或跳闸延时，当动作延时时间（2）到时发出报警或跳闸信号，过压故障动作；当执行方式为报警时，在报警动作后，当最小线电压小于返回阀值（3）时启动返回延时，当返回延时时间（4) 到时撤除报警，过压故障返回。
Overvoltage protection:
The intelligent controller measures the true effective value of the primary circuit voltage. When all three line voltages are greater than the set value, that is, when the minimum value of the three line voltages is greater than the set value of the overvoltage protection, the overvoltage protection acts; When the voltage of the three lines is less than the return value, the alarm action returns.
Action characteristics: When the minimum line voltage is greater than the action threshold (1), an alarm or trip delay is triggered. When the action delay time (2) expires, an alarm or trip signal is issued, and overvoltage fault occurs; When the execution mode is alarm, after the alarm action, the return delay is activated when the minimum line voltage is less than the return threshold (3). When the return delay time (4) expires, the alarm is removed and the overvoltage fault returns.

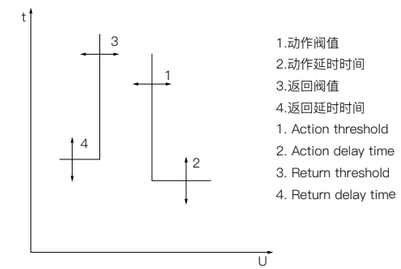

电压不平衡率保护：
电压不平衡率保护根据三个线电压之间的不平衡率进行保护动作。智能控制器测量电压不平衡率，当电压不平衡率大于动阀值保护动作；当电夺不平衡率小于返回值时报警动作返回。
动作特性：电压不平衡率大于动作阀值
(1) 时启动报警或跳闸延时，当动作延时时间
(2) 到时发出报警或跳闸信号，电压不平衡率故障动作；当执行方式为报警时，在报警动作后，当电压不平衡率小于返回阀值
(3) 时启动返回延时，当返回延时时间
(4) 到时撤除报警，电压不平衡率故障返回。
Voltage imbalance rate protection:
The voltage imbalance rate protection operates based on the imbalance rate between the three line voltages. The intelligent controller measures the voltage imbalance rate, and when the voltage imbalance rate is greater than the dynamic threshold protection action; When the imbalance rate of the power supply is less than the return value, the alarm action returns.
Action characteristics: voltage imbalance rate greater than action threshold
(1) When the alarm or tripping delay is triggered, when the action delay time
(2) When an alarm or trip signal is issued, the voltage imbalance rate malfunctions and acts; When the execution mode is alarm, after the alarm action, when the voltage imbalance rate is less than the return threshold
(3) When starting the return delay, when the return delay time
(4) When the alarm is removed, the voltage imbalance rate fault returns.

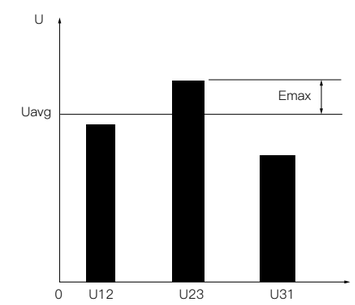

电压不平衡
Voltage unbalance

电压不平衡率计算方法：
Calculation method for voltage imbalance rate:

$$U_{unbal}=\frac{|E_{max}|}{U_{avg}}\times 100\%$$

$$U_{avg}=\frac{U_{12}+U_{23}+U_{31}}{3}$$

E_{max}：线电压和平均值之间的最大差值。
U_{avg}：三相线电压值有效值和的平均值。
E_{max}: The maximum difference between the line voltage and the average value.
U_{avg}: The average value of the effective value and the effective value of the three-phase line voltage.

电流不平衡率保护
Current imbalance rate protection

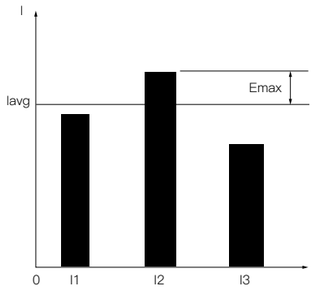

电流不平衡
Current unbalance

电流不平衡率保护对断相和三相的电流不平衡进行保护，根据三相电流之间的不平衡率进行保护动作。

不平衡率计算方法：

The current imbalance rate protection protects against phase failure and three-phase current imbalance, and performs protection actions based on the imbalance rate between three-phase currents.

Calculation method for imbalance rate:

$$I_{unbal}=\frac{|E_{max}|}{Ia_{vg}}X100\%$$

$$I_{avg}=\frac{I_1+I_2+I_3}{3}$$

E_{max}：为每相电流与 I_{avg} 之间的最大差值。

I_{avg}：为三相线电流值有效值平均值。

E_{max}: is the maximum difference between each phase current and I_{avg}.

I_{avg}: is the average effective value of the three-phase line current value.

谐波测量
Harmonic measurement

智能控制器能测量基波电流、基波线电压、基波相电压、基波功率及 3-31 次各次奇次谐波电流含有率（HRI_h）、谐和波电压含有率（HRU_h）、谐波电流总畸变率 [THD_i、thd_i]、谐波电压总畸变率 [THD_u、thd_u]

谐波含有率（HR）

周期性交流量中含有第 h 次谐波分量的方均根值与基波分量的方均根值之比 (用百分数表示）。

第 h 次谐波电流含有率以 HRI_h 表示。

The intelligent controller can measure the fundamental current, fundamental line voltage, fundamental phase voltage, fundamental power, and the odd harmonic current content (HRIH), harmonic voltage content (HRUH), total harmonic current distortion rate [THDi, thdi], and total harmonic voltage distortion rate [THDu, thdu] of 3-31 orders

Harmonic Content (HR)

The ratio of the root mean square value of the h-th harmonic component to the root mean square value of the fundamental component in periodic traffic flow (expressed as a percentage).

The content of the h-th harmonic current is expressed in HRIh.

$$HRI_h=\frac{I_h}{I_{1-1}}X100\%$$

注：式中 Ih 为 A 相第 h 次谐波电流 (方均根值）；

第 h 次谐波电压含有率以 HRU_h 表示。

Note: I_h the formula, Ih is the h-th harmonic current of phase A (root mean square value);

The h-th harmonic voltage content is expressed in HRU_h.

$$HRU_h=\frac{U_h}{U_{12-1}}X100\%$$

注：式中 Ih 为 A-B 相第 h 次谐波线电压

总谐波畸变率（THD、thd）

周期性交流量中的谐波含量与其基波分量的方均根值之比（THD) 用百分数表示。

Note: I_h the formula, Ih is the h-th harmonic line voltage of A-B phase

Total harmonic distortion rate (THD, THd)

The ratio (THD) of the harmonic content in periodic AC flow to the root mean square value of its fundamental component is expressed as a percentage.

$$THDi=\frac{\sqrt{\sum_{h=2}^{40}I^2_h}}{I_{1-1}}X100\%$$

$$THDi=\frac{\sqrt{\sum_{h=2}^{40}U^2_h}}{U_{1-1}}X100\%$$

注：式中 I_h 为 A 相第 h 次谐波电流 (方均根值）；U_h 为 A-B 相间第 h 次谐波线电压 (方均根值）。

周期性交流量中的谐波含量与该周期性交流量的方均根值之比（thd) 用百分数表示。

Note: I_h the formula, Ih is the h-th harmonic current of phase A (root mean square value); U_h is the h-th harmonic line voltage (root mean square value) between A-B phases.

The ratio (thd) of the harmonic content in periodic traffic flow to the root mean square value of that periodic traffic flow is expressed as a percentage.

$$thdi=\frac{\sqrt{\sum_{h=2}^{40}I^2_h}}{I_{1-1}}X100\%$$

$$thdu=\frac{\sqrt{\sum_{h=2}^{40}U^2_h}}{U_{1-1}}X100\%$$

注：式中 I_h 为 A 相第 h 次谐波电流 (方均根值）；U_h 为 A-B 相间第 h 次谐波线电压 (方均根值）。

Note: I_h the formula, Ih is the h-th harmonic current of phase A (root mean square value); U_h is the h-th harmonic line voltage (root mean square value) between A-B phases.

控制器的基本功能
Basic functions of the controller

2M型控制器符号及定义

2M type controller symbols and definitions

表七

Table 7

序号 Serial Number	符号 Symbol	定义 Define
1	In	指示控制器的额定电流 Indicating the rated current of the controller
2	G	接地或漏电电流指示灯 Grounding or leakage current indicator light
3	L1	A相电流指示灯 A-phase current indicator light
4	L2	B相电流指示灯 B-phase current indicator light
5	L3	C相电流指示灯 C-phase current indicator light
6	MAX	ABC三相最大电流指示灯 ABC three-phase maximum current indicator light
7	A	电流单位：安培 Current unit: ampere
8	kA	电流单位：千安培 Current unit: kiloamperes
9	s	时间单位：秒 Time unit: seconds
10	TEST	功能试验指示灯 Functional test indicator light
11	Ic1	负载监控1保护指示灯 Load monitoring 1 protection indicator light
12	Ic2	负载监控2保护指示灯 Load monitoring 2 protection indicator light
13		电流不平衡保护指示灯 Current imbalance protection indicator light
14	N	N相指示灯 N-phase indicator light
15	Ir	长延时保护指示灯 Long delay protection indicator light
16	Isd	短延时保护指示灯 Short delay protection indicator light
17	Ii	瞬时保护指示灯 Instantaneous protection indicator light
18	Ig	接地保护指示灯 Grounding protection indicator light
状态 State	红黄绿三色灯 Red, yellow, and green tricolor lights	控制器运行状态指示灯 绿色：代表正常运行 蓝色：代表保护报警 红色：代表保护动作，控制器跳闸 Controller operation status indicator light Green: represents normal operation Blue: represents a protection alarm Red: represents protection action, and the controller trips
设置、向上、返回、查询、向下、确定、试验、复位 Set, Up, Return, Query, Down, OK, Experiment, Reset		人机交互按键（共8个） 试验键即面板上的TEST键 Human machine interaction buttons (8 in total) The test key is the TEST key on the panel

通讯
Communicate

可通过通讯口对断路器实现远距离的“四遥”功能。即“遥控”、“遥讯”、“遥调”、“遥测”。

通讯协议使用 Modbus-RTU、Profibus-DP 或 Device 模式，标准的 RS-485 接口。波特率、通讯地址可通过编程器设定。最大接线距离 1.5km，一条线路可同时连接 250 台可通讯断路器，通讯线路为双绞屏蔽线，可通过加装中继电器延长通讯距离。

The remote ”four remote” function of the circuit breaker can be achieved through the communication port. Namely, ”remote control”, ”remote communication”, ”remote adjustment”, and ”telemetry”.

The communication protocol uses Modbus RTU, Profibus DP, or Device mode, with a standard RS-485 interface. The baud rate and communication address can be set through a programmer. The maximum wiring distance is 1.5km, and one line can simultaneously connect 250 communicable circuit breakers. The communication line is a twisted pair shielded wire, and the communication distance can be extended by installing a relay.

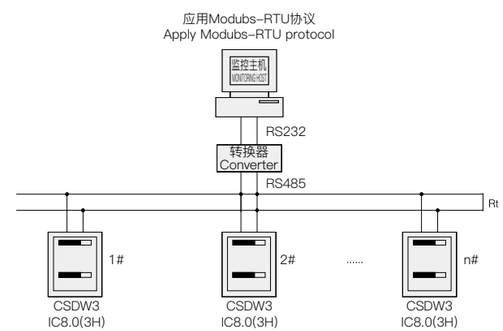

通讯组网连接示意图一

Communication Network Connection Diagram I

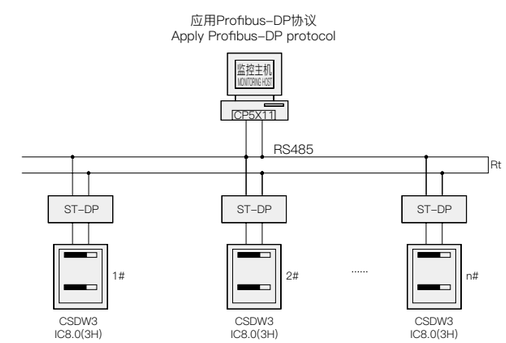

ST-DP 为通讯模块，主站卡位 SIEMENS 公司的 CP5X11

Rt：网络终端电阻，一般为 120Ω

ST-DP is a communication module, with the main station card located at SIEMENS company’s CP5X11

Rt: Network terminal resistance, usually 120 Ω

通讯组网连接示意图二

Communication Network Connection Diagram II

触头磨损批示
Contact wear instructions

智能控制器面板上可显示当前触头磨损情况，控制器出厂显示值为 100%，表示触头没有磨损，当显示值下降到 60% 时发出报警信号，以便提醒用户及时采取维护措施，触头更换后，通过设置可恢复为初始磨损值。

The intelligent controller panel can display the current contact wear status. The factory display value of the controller is 100%, indicating that the contact is not worn. When the display value drops to 60%, an alarm signal is issued to remind users to take maintenance measures in a timely manner. After the contact is replaced, it can be restored to the initial wear value by setting.

自诊断
Self diagnosis

当智能控制器微处理发生故障或微处理器周围环境温度超过 80℃ ±5℃，即立即发出报警信号。

When the intelligent controller microprocessor malfunctions or the ambient temperature around the microprocessor exceeds 80 ℃ ± 5 ℃, an alarm signal is immediately issued.

MCR及HSISC保护
MCR and HSISC protection

MCR 功能：断路器在合闸过程中或控制器在通电初始化时，遇到短路短延时故障能立即转为瞬时分闸。

HSISC 功能：断路器在正常运行时，当短路电流超过一定限值后，控制器发出信号使断路器分断，此功能不受短路瞬时保护设定值的影响

MCR function: During the closing process of the circuit breaker or during the initialization of the controller during power on, if a short circuit short delay fault occurs, it can immediately switch to instantaneous opening.

HSISC function: When the short-circuit current of the circuit breaker exceeds a certain limit during normal operation, the controller sends a signal to break the circuit breaker, which is not affected by the instantaneous short-circuit protection setting value

接通分断及越限跳闸保护 Switching on/off and over limit tripping protection		
接通分断 Making and breaking	动作阀值 Motor threshold	15kA~100kA(步长1kA) 15kA~100kA([UNK][UNK]1kA)
	默认整定值 Default setting value	50kA(In不大于2000A) 60kA(In大于2000A) 50kA(Inqas 2000A) 60kA(Inqas 2000A)
越限跳闸 Over limit tripping	动作阀值 Motor threshold	15kA~100kA(步长1kA) 15kA~100kA([UNK][UNK]1kA)
	默认整定值 Default setting value	65kA(W3-2500),80kA(W3-4000,W3-7500)

智能型控制器保护特性和功能
Intelligent controller protection characteristics and functions

过电流保护特性

Overcurrent protection characteristics

a. 控制器的整定值 Ir(I/In) 及误差

a. The setting value Ir (I/In) and error of the controller

表四

Table 4

长延时 Long delay	短延时 Short delay		瞬时 Instantaneous		接地故障 Ground fault	
Ir1	Ir2	误差 Error	Ir3	误差 Error	Ir4	误差 Error
(0.4-1)In	1.5-15)Ir	±10%	In-25kA(Inm=1600A) In-50kA(Inm=2500A) In-75kA(Inm=3200A-4000A) In-100kA(Inm=6300A)	±15%	Inm=1600A-6300A (0.2-1)In 最大 Maximum 1200A 最小 Minimum 160A	±10%

注：当同时具有三段保护时，整定值不能交叉。

Note: When there are three sections of protection at the same time, the setting values cannot cross.

b. 长延时保护反时限特性 $I^2TL=(1.5Ir1)^2tL$，其中（1.05-2.0）Ir1 的动作时间见表五，误差为 ±15%。

注：tL 为长延时 1.5Ir 的整定时间，TL 为长延时的动作时间。

b. Long time delay protection inverse time characteristic $I^2TL=(1.5Ir1)^2tL$, where the action time of (1.05-2.0) Ir1 is shown in Table 5, with an error of ± 15%.

Note: tL is the setting time for a long delay of 1.5Ir, and TL is the action time for a long delay.

表五

Table 5

1.05Ir1	1.3Ir1	1.5Ir1整定时间s Setting time	15	30	60	120	240	480
>2h不动作 Inaction	<1h动作 Action	2.0Ir1动作时间s Action time	8.4	16.9	33.7	67.5	135	270

c. 短路短延时保护特性技术参数

c. Technical parameters for short-circuit short delay protection characteristics

表六

Table 6

反时限和定时限 整定电流值 Inverse and definite time limits Setting current value	Isd=IR× …	1.5～15 + OFF (退出位置) Exit Position
	动作特性 Operating characteristic	≤ 0.9 I 动作特性 Operating characteristic sd ： 不动作 Inaction
		＞1.1Isd ： 延时动作 Delay action
定时限延时整定值 Fixed time delay setting value	t sd (s)	0.1～1(级差0.1) Differential
	精度 Accuracy	±10%
反时限保护特性 Inverse time protection characteristics		曲线1～5同为过载长延时,但曲线速度快10 倍 Curves 1-5 are both overload and long delay, but the curve speed is 10 times faster
		曲线6特性表达式：$Tsd=64tsd/N^2$ 也就是：$Tsd=tsd*(8IR/I)^2$ Curve 6 characteristic expression: $Tsd=64tsd/N^2$ That is: $Tsd=tsd * (8IR/I)^2$
反时限热记忆(15min，断电可清除) Inverse time thermal memory (15min, can be cleared after power outage)		标准+OFF(关闭) Standard+OFF

短路短延时保护有两种方式：

1、反时限保护：当故障电流超过反时限整定电流值时，如果是曲线（1 ～ 5），控制器按与过载长延时一样的曲线进行延时保护，仅是保护的速度要快 10 倍（即按过载长延时曲线表达式算出的延时动作时间的十分之一），果是曲线 6，则按短路短延时曲线 6 特性表达式计算反时限延时动作时间值。

2、定时限保护：当故障电流超过定时限整定电流值时，控制器按定时限延时整定值进行延时保护。

注意：当反时限整定电流值整定在“OFF”位置或定时限整定电流值小于等于反时限整定电流值时，则控制器按定时限保护，反时限功能自动失效；当定时限保护投入工作时，无论定时限或反时限保护，短延时保护延时动作时间均不小于定时限延时整定值；如果当定时限保护在退出状态时，反时限保护的延时动作时间则不受定时限延时整定值的限制（但不小于 20ms）。

There are two methods for short circuit short time delay protection:

1. Inverse time protection: When the fault current exceeds the inverse time setting current value, if it is a curve (1–5), the controller will perform delay protection according to the same curve as the overload long delay, only 10 times faster than the protection speed (i.e. one tenth of the delay operation time calculated according to the overload long delay curve expression). If it is a curve 6, the inverse time delay operation time value will be calculated according to the short-circuit short delay curve 6 characteristic expression.

2. Fixed time limit protection: When the fault current exceeds the set current value of the fixed time limit, the controller performs delay protection according to the set value of the fixed time limit delay.

Attention: When the inverse time limit setting current value is set to the ”OFF” position or the definite time limit setting current value is less than or equal to the inverse time limit setting current value, the controller will protect according to the definite time limit, and the inverse time limit function will automatically fail; When the fixed time limit protection is put into operation, regardless of the fixed time limit or inverse time limit protection, the delay action time of the short time delay protection shall not be less than the set value of the fixed time limit delay; If the definite time protection is in the exit state, the delay action time of the inverse time protection is not limited by the definite time delay setting value (but not less than 20ms).

d. 短路瞬时保护特性

d. Short circuit instantaneous protection characteristics

控制器的短路瞬时保护特性技术参数见表七。

The technical parameters of the short-circuit instantaneous protection characteristics of the controller are shown in Table 7.

表七

Table 7

整定电流值 Setting current value	Ii=	1.0 I～50kA/75kA/100kA + OFF (退出位置) Exit Position
	动作特性 Operating characteristic	≤0.85Ii：不动作 Inaction ＞1.15Ii：动作 Action
动作时间 Action time		＜ 100ms（含断路器固有分断时间） Including inherent breaking time of circuit breaker

注：当控制器为 I 框时，瞬时保护整定电流值为 1.0In ～ 50kA + OFF；当控制器为 II 框时，瞬时保护整定电流值为 1.0In ～ 75kA + OFF；控制器为 III 框时，瞬时保护整定电流值为 1.0In ～ 100kA + OFF。

Note: When the controller is in frame I, the instantaneous protection setting current value is 1.0In~50kA+OFF; When the controller is in frame II, the instantaneous protection setting current value is 1.0In~75kA+OFF; When the controller is in frame III, the instantaneous protection setting current value is 1.0In~100kA+OFF.

e. 接地故障或剩余电流保护特性

e. Ground fault or residual current protection characteristics

控制器的接地故障保护特性技术参数见表八

The technical parameters of the grounding fault protection characteristics of the controller are shown in Table 8

表八

Table 8

不对地接地保护 Unearthed grounding protection	整定电流值 Setting current value	Ig=In×…	0.2～1+OFF（最小100A，OFF表示退出位置） (Minimum 100A, OFF indicates exit position)
		动作特性 Operating characteristic	<0.8Ig:不动作 Inaction 21.0Ig:延时动作 Delay action
	延时整定值 Delay setting value	定时限延时t g（s） Definite time delay	0.1~1+OFF（级差0.1,OFF表示只报警不跳闸） (Level difference 0.1, OFF indicates only alarm but not trip)
		反时限系数 KG Inverse time coefficient	1.5~6+OFF（级差0.5,OFF表示接地为定时限） (Level difference of 0.5, OFF indicates a fixed time limit for grounding)
		精度 Accuracy	±10%

f. 剩余电流保护特性

f. Residual current protection characteristics

控制器的剩余电流保护特性技术参数和动作延时特性技术参数见表九

The technical parameters of residual current protection characteristics and action delay characteristics of the controller are shown in Table 9

表 9

Table 9

剩余电流保护 Residual current protection	整定电流值 Setting current value	额定剩余电流IΔn（A） Rated residual current	0.3~30.0+OFF（级差0.1,OFF表示退出位置） (Level difference 0.1, OFF indicates exit position)
		动作特性 Operating characteristic	<0.8IAn：不动作 Inaction ≥1.0IAn：延时动作 Delay action
	延时整定值 Delay setting value	动作延时tΔn（s） Action delay	ON、0.06、0.08、0.10~0.96、0.98、1.00、OFF (ON表示瞬时动作，OFF表示只报警不跳闸，级差为0.02s) (ON indicates instantaneous action, OFF indicates only alarm without tripping, with a level difference of 0.02s)
		反时限系数 KG Inverse time coefficient	5（5IΔn以下为反时限特性，25IΔn为定时限） 5 (Below 5I Δ n is the inverse time characteristic, and 25I Δ n is the fixed time limit)
		精度 Accuracy	±10%（或 Or ±40ms）

注 : 接地故障或剩余电流保护特性的功能说明

接地故障保护或剩余电流保护两种只能选择一种，用户在订货时需说明。

Note: Functional description of ground fault or residual current protection characteristics

There can only be one choice between ground fault protection or residual current protection, and users need to specify when ordering.

电气附件
Electrical accessories

欠、失压脱器

注: 在雷雨多发地区或供电电源电压不稳定的电网中，推荐使用带延时的脱扣器，可防止由于短时的电压降低而使断路器脱扣，延时时间一般为0.3s、0.5s、0.7s、1s、3s、5s，可供用户选择。

Undervoltage and loss of voltage release device

Note: In thunderstorm prone areas or power grids with unstable power supply voltage, it is recommended to use a release with a delay to prevent the circuit breaker from tripping due to a short-term voltage drop. The delay time is generally 0.3s, 0.5s, 0.7s, 1s, 3s, and 5s, which is available for users to choose from.

额定工作电压Ue(V) Rated working voltage Ue (V)	AC400	AC230
欠压脱扣器动作电压(V) Undervoltage release action voltage (V)	(0.35~0.7)Ue	
失压脱扣器动作电压(V) Action voltage of voltage loss release (V)	≤0.35Ue	
欠电压可靠合闸电压(V) Undervoltage reliable closing voltage (V)	(0.85~1.1)Ue	
欠电压可靠不能合闸电能(V) Under voltage reliable unable to close electrical energy (V)	≤0.35Ue	
功耗 power dissipation	12VA	

分励脱扣器

可远程操纵使断路器断开

Shunt release

Can be remotely operated to disconnect the circuit breaker

额定控制电源电压Ue（V) Rated control power supply voltage Ue (V)	AC400	AC230	DC220
动作电压 Action voltage	(0.85~1.1)Ue		
瞬时电流（A) Instantaneous current (A)	1.2	1	
闭合时间（ms) Closing time (ms)	50ms± 10ms		

闭合电磁铁

储能结束后，闭合电磁铁能使操作机构储存的能量瞬间释放，使断路器快速闭合。

Closed electromagnet

After the energy storage is completed, closing the electromagnet can instantly release the energy stored by the operating mechanism, causing the circuit breaker to quickly close.

额定控制电源电压Ue(V) Rated control power supply voltage Ue (V)	AC400	AC230	DC220
动作电压 Action voltage	(0.85~1.1)Ue		
瞬时电流(A) Instantaneous current (A)	1.2	1	
闭合时间（ms) Closing time (ms)	50ms±10ms		

辅助开关

AUXILIARY switch

额定工作电压UE(V) Rated working voltage UE (V)	约定发热电流Ith（A) Agreed heating current Ith (A)	额定控制容量 Rated control capacity
AC400	6	300VA
AC230		
DC220		60W

辅助开关标准型式为 4 常开 4 常闭转换触头

The standard type of auxiliary switch is 4 normally open and 4 normally closed conversion contacts

额定电压Ue Rated voltage Ue		额定发热电流 Ith(A) Rated thermal current
交流AC 50Hz Alternating current	AC250V	30
	AC380V	1
直流DC Direct-current	DC220V	0.3
使用类别 Utilization category		AC-15、 AC-12
		DC-12

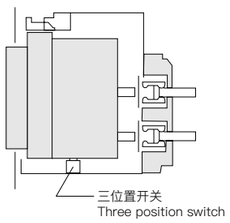

三位置开关

三位置开关主要适用于抽屉式断路器分离、试验、连接三种位置状态指示；
分离位置配置一常开一常闭触点；
试验位置配置一常开一常闭触点；
连接位置配置一常开一常闭触点；

Three position switch

The three position switch is mainly suitable for drawer type circuit breakers
Indication of three position states: separation, testing, and connection;
The separation position is equipped with one normally open and one normally closed contact;
The test position is equipped with one normally open and one normally closed contact point;
The connection position is equipped with one normally open and one normally closed contact point;

“三位置”接线图

Three Position Wiring Diagram

分离 Separate	试验 T Test	连接 Connect
02 — 03, 01	05 — 06, 07	08 — 09, 07

电动操作机构

断路器具有电动机储能及自动再储能功能 (断路器亦可手动储能)

Electric operating mechanism

The circuit breaker has the functions of motor energy storage and automatic energy re storage (the circuit breaker can also store energy manually)

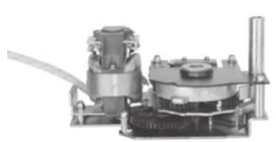

壳架等级 Shell frame level	240	400
动作电压（V） Action voltage (V)	230/400	
功率 Power	85W	110W
储能时间（s） Energy storage time (s)	<7s	

电源模块

Power module

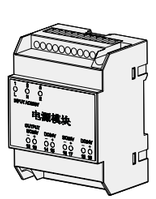

输入电源：AC230V/AC400V/DC110V/DC220V（可选）；
当使用接地保护、通讯、热记忆功能或要求断路器在分闸状态保持输入输出信号时，必须配备辅助电源。
当选用直流型智能控制器时，直流电源必须通过直流电源模块转换为 DC24V，再提供给智能控制器。
Input power supply: AC230V/AC400V/DC110V/DC220V (optional);
When using grounding protection, communication, thermal memory functions, or requiring the circuit breaker to maintain input and output signals in the open state, an auxiliary power supply must be equipped.
When selecting a DC type intelligent controller, the DC power supply must be converted to DC24V through the DC power module and then provided to the intelligent controller.

ST201 继电器扩容模块

ST201 Relay Expansion Module

继电器扩容模块工作电源为 DC24V 供电，DC24V 由 ST-IV 电源模块提供。
控制器输出的 DO/DI 信号单元一般用于故障报警或指示等 , 当用于控制器分合闸或带负载容量较大时需通过 ST201 继电器模块来放大控制器发出的 DO/DI 控制信号 ST201 触点容量为：AC250V,10A；DC28V,10A。外形及安装尺寸通 ST-IV 电源模块。
The working power supply of the relay expansion module is DC24V, which is provided by the ST-IV power module. The DO/DI signal unit output by the controller is generally used for fault alarm or indication. When used for controller opening and closing or when the load capacity is large, the ST201 relay module needs to amplify the DO/DI control signal sent by the controller. The ST201 contact capacity is AC250V, 10A; DC28V, 10A. The appearance and installation dimensions are consistent with the ST-IV power module.

外接中性线（N相）互感器(T)
External neutral line (N-phase) transformer (T)

当用在（3P+N）配电系统中与三极断路器一起使用（此时智能控制器单元应选择 IU4.0 类型），安装于中性线 N 上，安装点距离最大 2m。
When used in a (3P+N) distribution system with a three pole circuit breaker (in which case the intelligent controller unit should choose IU4.0 type), it should be installed on the neutral line N, with a maximum distance of 2m from the installation point.

三种规格如下：
The three specifications are as follows:

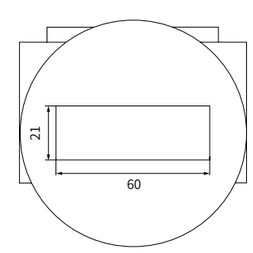

STW25壳架
Housing
630~ 2500A

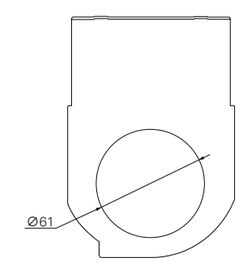

STW40壳架
Housing
2000~ 4000A

如 N 相母排太宽，现有外接 N 相互感器无法满足要求，我公司亦可提供柔性互感器，柔性互感器可接 100mm 及以上宽母排。
If the N-phase busbar is too wide and the existing external N-phase transformer cannot meet the requirements, our company can also provide flexible transformers, which can be connected to 100mm or more wide busbar.

外接地电流互感器
External grounding current transformer

控制器当接地保护为地电流保护（W）时使用，外接地电流互感器为 ZT100 互感器，变比为：控制器额定电流 1A（3200A 以下）、控制器额定电流 /5A（3200A 及以上）。

The controller is used when the grounding protection is ground current protection (W), and the external grounding current transformer is ZT100 transformer. The transformation ratio is: the rated current of the controller is 1A (below 3200A), and the rated current of the controller is 5A (3200A and above).

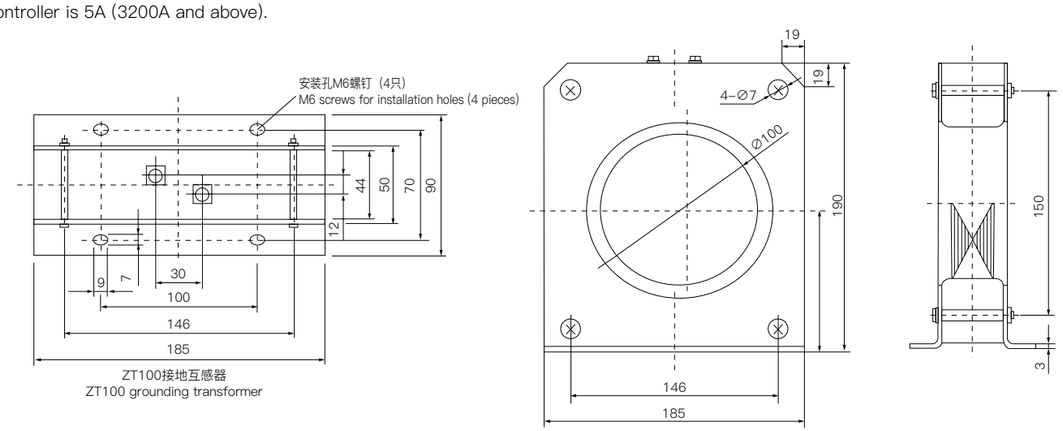

ZT100接地互感器
ZT100 grounding transformer

外接零序漏电互感器
External zero sequence leakage transformer

控制器当接地保护为漏电保护（E）时使用，外接零序漏电互感器为 ZCT1 互感器，变比为：30A/20mA。

The controller is used when the grounding protection is leakage protection (E), and the external zero sequence leakage transformer is ZCT1 transformer, with a transformation ratio of 30A/20mA.

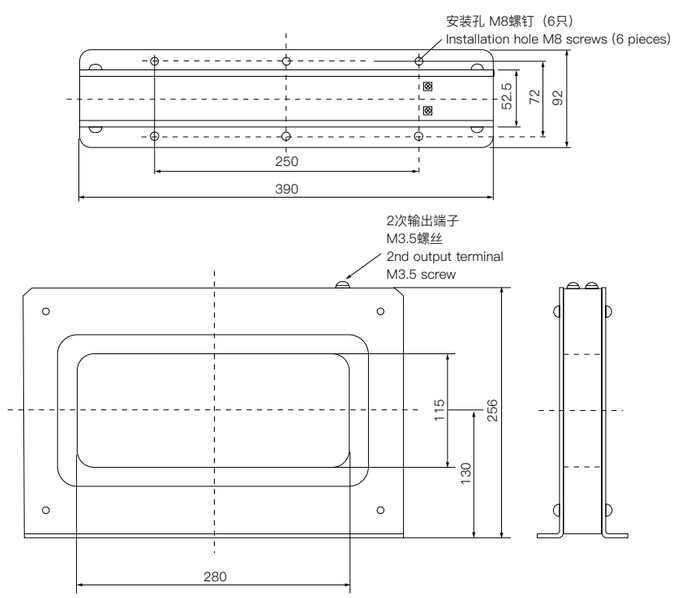

ZCT1 漏电互感器
Leakage transformer

抽屉座位置电气指示装置
Electrical indication device for drawer seat position

抽屉式断路器本体与抽屉座分别处于“分离”、“试验”、“连接”三个位置时，三个位置电气批示装置可分别输出对应此三位置时电气状态信号，装置安装于抽屉内。

When the drawer type circuit breaker body and drawer seat are respectively in three positions of ”separation”, ”test”, and ”connection”, the electrical indication device at these three positions can output electrical status signals corresponding to these three positions, and the device is installed in the drawer.

特性
Characteristic

额定工作电压 Ue (V) Rated working voltage Ue (V)	230
约定发热电流 Ithe (A) Agreed heating current Ithe (A)	10
额定工作电流 Ie (A) Rated working current Ie (A)	1.5

“分离”位置状态“试验”位置状态“连接”位置状态

Separation position status Test position status Connection position status

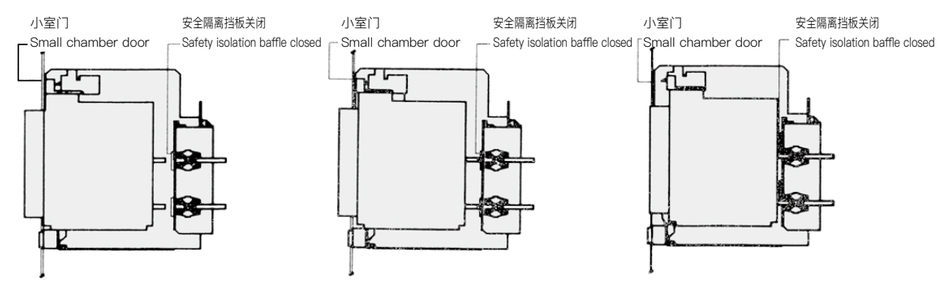

主电路和辅助回路全部断开
安全挡板关闭
All main and auxiliary circuits are disconnected
Safety barrier closed

主电路断开，辅助回路接通
安全挡板关闭，可进行必要的试验
Main circuit disconnected, auxiliary circuit connected
The safety baffle is closed and necessary tests can be carried out

主电路和辅助回路均接通
安全挡板开启
Both the main circuit and auxiliary circuit are connected
Safety barrier open

断路器抽屉座连接、试验、分离装置
Circuit breaker drawer seat connection, testing, and separation device

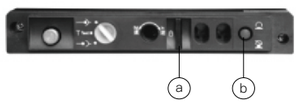

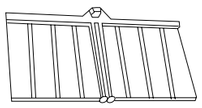

a 挂锁装置（挂锁用户自备）

用户抽屉式锁定“分离”或“试验”或“连接”位置；

b 断路器分离、试验、连接位置的联锁和解锁装置

用于进、退手摇手柄在自动寻找锁定；

“分离”、“试验”、“连接”位置，避免因操作人员手摇手柄操作不到位而造成的故障。

锁定位置解除

位置红色联锁装置弹出后，若要再次操作手柄，必须先按下红色联锁装置同义词可操作手摇手柄。

相间隔板

垂直安装于抽屉式断路器固定部分的接线板之间，加强母排连接处的绝缘强度，防止电弧扩展至断路器内部。

三锁二钥匙

三锁二钥匙机械联锁是专为不相邻的三台断路器而设计的。当某两台断路器需合曾时，首先把钥匙插入该两台断路器的锁孔内，并将分闸按钮按住，作顺时针转动。此时断路器可进行合闸操作，但钥匙不能取出。若取出钥匙，需将断路器分闸，将分闸按钮按住，钥匙向逆时针方向转动并取出。此时断路器将无法合闸。

A padlock device (provided by the padlock user)

User drawer locking ”separation” or ”test” or ”connection” position;

Interlocking and unlocking devices for circuit breaker separation, testing, and connection positions

Used for automatic search and locking of forward and backward hand cranking handles;

The positions of ”separation”, ”test”, and ”connection” should avoid malfunctions caused by operators not operating the handle properly.

Lock position release

After the position red interlocking device pops up, to operate the handle again, you must first press the synonym of the red interlocking device to operate the manual handle.

Interphase partition

Vertically installed between the terminal blocks of the fixed part of the drawer type circuit breaker, to strengthen the insulation strength of the busbar connection and prevent arc expansion inside the circuit breaker.

Three locks and two keys

The three lock two key mechanical interlocking is designed specifically for three non adjacent circuit breakers. When two circuit breakers need to be closed, first insert the key into the lock hole of the two circuit breakers, and press and hold the opening button to rotate clockwise. At this point, the circuit breaker can be closed, but the key cannot be removed. If the key is removed, the circuit breaker needs to be opened, the opening button needs to be pressed, and the key needs to be turned counterclockwise and taken out. At this point, the circuit breaker will not be able to close.

结构简述
Structure Introduction

固定式断路器主要由触头系统、智能控制器、手动操作机构、电动操作机构、安装版组成。

抽屉式断路器主要由触头系统、智能控制器、手动操作机构、电动操作机构、抽屉座组成。

断路器为立体布置形式，具有结构紧凑、体积小的特点。触头系统封闭在绝缘底板内，其每相触头也都用绝缘板隔开，形成一个个小室，而智能控制器、手动操作机构、电动操作机构一次排在其前面形成各自独立的单元，如其中一单元故障，可单独进行拆卸、更换。

抽屉式断路器由断路器本体和抽屉座组成，抽屉座内的导轨能拉进拉出，断路器本体坐落在导轨上进出抽屉座，通过断路器本体上的母线与抽屉座上的桥形触头咬合联结接通主回路。

抽屉式断路器有三个工作位置：分别是“分离”、“试验”、“连接”位置，位置变更通过手柄的摇进或摇出来实现，三个位置的指示通过抽屉座底座上的指针来指示。当处于“连接”位置时，主回路和二次回路均接通，当处于“试验”位置时，主回路断开，并有绝缘隔板隔开，仅二次回路接通，此时断路器不能合闸；当处于“分离”位置时，主回路和二次回路均断开。

必断路器的连锁机构（适用于抽屉式、固定式）。

用户可单独采购连锁机构进行两台或三台的转换，也可配本公司 GTQ2Z 双电源自动转换开关，以实现双路供电自动转换。

The fixed circuit breaker is mainly composed of contact system, intelligent trip unit, manual operating mechanism, electric operating mechanism, and installation plate.

The drawout circuit breaker is mainly composed of contact system, intelligent trip unit, manual operating mechanism, electric operating mechanism, and drawer seat.

The circuit breaker is vertically arranged, with contact structure and small volume. The contact system is enclosed in the insulated base plate, the contact of each phase is also separated by an insulating board to form a small chamber, and the intelligent trip unit, manual operation mechanism and electric operation mechanism are lined up in front of the contact system to form independent units.

Drawout circuit breaker is composed of circuit breaker body and drawer seat, the guide rail in the drawer seat can be pulled in and out, the circuit breaker body is located on the guide rail to enter and exit the drawer seat, and the busbar on the circuit breaker body is engaged and connected with the bridge contact on the drawer seat to power on the main circuit.

The drawout circuit breaker has three working positions (“Separate”, ”Test” and ”Connect”) which can be switched by the rocker handle and indicated by the pointer on the drawer base. When in the ”Connect” position, the main circuit and the secondary circuit are connected. When in the ”Test” position, the main circuit is disconnected and separated by an insulation partition, only the secondary circuit is connected, and the circuit breaker cannot be powered on. When in the ”Separate” position, both the primary and secondary circuits are disconnected.

※Interlocking mechanism of circuit breaker(for drawout type,fixed type)

Users can purchase the interlocking mechanisms separately for conversion of two or three units, or GTQ2Z dual power automatic conversion switch of the Company can be applied to realize the automatic conversion of dual power supplies.

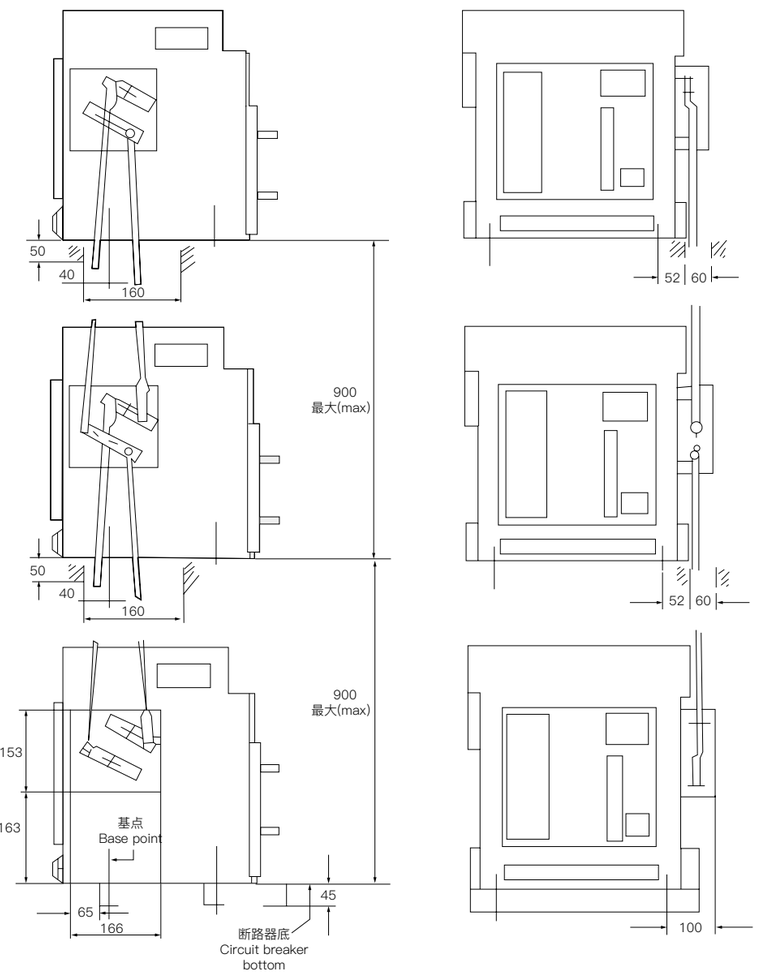

图五
Fig.V(A)

杠杆连锁用的三台垂直安装的断路器时，如两台断路器连锁只需去除最上面的断路器
Three vertically mounted circuit breakers are used for lever interlocking. For the interlocking of two circuit breakers, the top circuit breaker can be removed.

软联锁（水平、垂直均可带）
Soft interlock (horizontal and vertical)

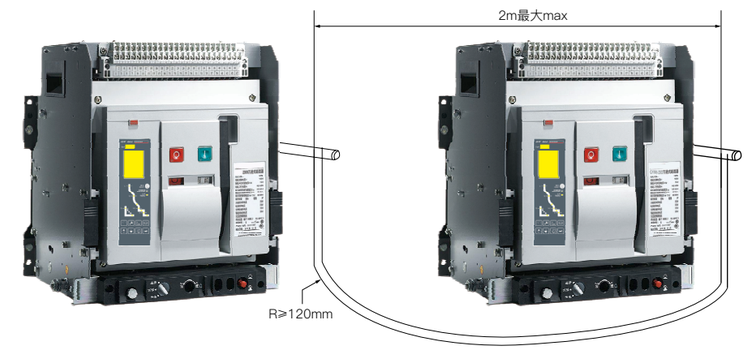

图 5 (B)
Fig.V(B)

内部接线方式
Internal Wiring Method

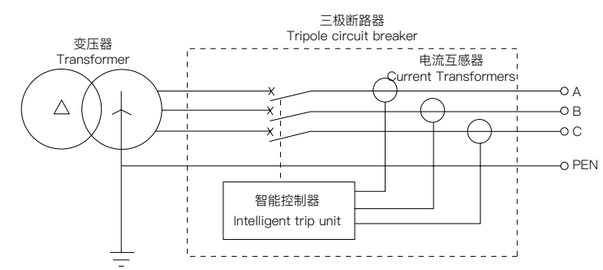

3PT 型
差值型接地故障保护，信号只取三相电流的矢量和（三相不平衡）
Type 3PT
Differential grounding fault protection; the signal is only taken from the vector sum of three-phase current (three-phase imbalance)

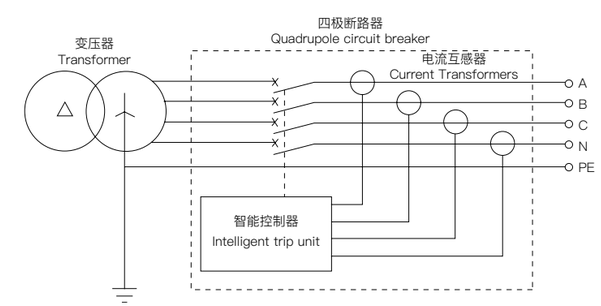

4PT 型
差值型接地故障保护，信号取三相电流及 N 相电流的矢量和
Type 4PT
Differential grounding fault protection; the signal is taken from the vector sum of three-phase current and N-phase current

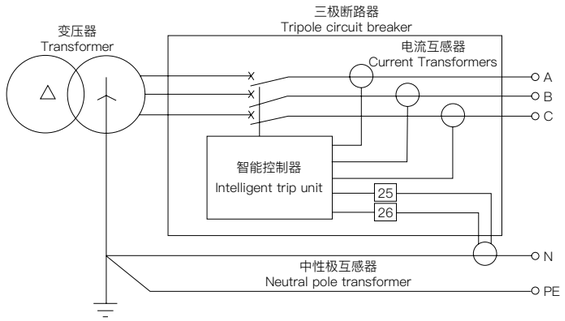

(3P+N) T 型

外接中性极互感器差值型接地故障保护，信号只取三相电流及 N 相电流的矢量和。

Type (3P+N)

Differential grounding fault protection of external neutral-pole transformer; the signal is only taken from the vector sum of three-phase current and N-phase current

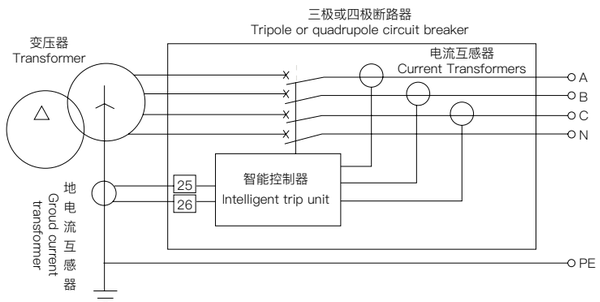

(3P+N) W 型

外接低电流互感器低电流型接地故障保护，信号直接取主电源的中性点与地之间。

Type(3P+N) W

Low current type grounding fault protection of external low current transformer; the signal is directly taken between the neutral point of the main power supply and the ground.

外接式单相接地保护功能

外接式互感器（中性极互感器或地电流互感器) 作为附件形式提供给用户，由用户自行将其套入母排中，并将连线（长度为 2m) 接至电路器二次回路接线端子 #36、#37。

External single-phase grounding protection function

The external transformer (neutral-pole transformer or ground current transformer) is provided to the user as an accessory, inserted into the busbar by the user, and wired (2 m long) to the secondary circuit terminal s#36 and #37 of the circuit breaker.

外接互感器的中心开孔（穿心母排最大允许通过）尺寸如下：

The dimensions of the center hole (maximally allowing the busbar to pass through) of the external transformer are as follows:

型号 Model	内孔尺寸 Inner Hole Size	备注 Remarks	
N极外接互感器 N-pole external transformer	61.5×21	提供客户选择定制 Provided to customers for customization	
	81×20		
	83×32.5		
	102×51.5		
	126×36		
	153×55		
N极外接互感器 N-pole external transformer	61×21	与断路器内部 互感器相同尺寸 Same size as the transformer inside circuit breaker	框I Frame I
	91×31		框 II 、框III Frames II and III

二次回路接线图

Wiring Diagram of Secondary Circuit

2M、3M 型控制器接线图

Wiring Diagram of 2M and 3M Trip Units

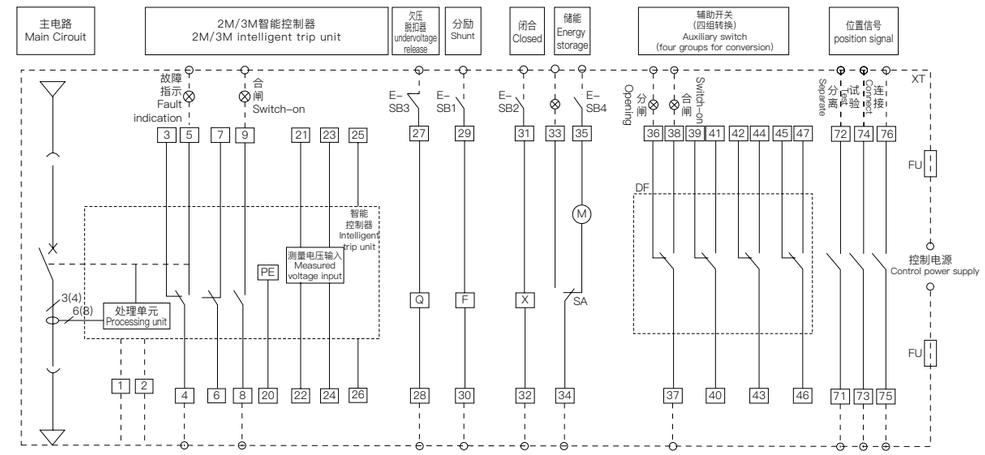

DF– 断路器辅助开关
SB1– 分励按钮（用户自备）
SB3– 欠压按钮（用户自备）
SB2– 合闸按钮（用户自备）
SB4– 储能按钮（用户自备）
DF – Auxiliary switch of circuit breaker
SB1 – Shunt button (user-provided)
SB3– Undervoltage button (user-provided)
SB2 – Switch-on button (user-provided)
SB4 – Energy storage button (user-provided)

SA– 储能电动机行程（微动）开关
XT– 二次接线端子
⊗– 信号灯（用户自备）
FU– 熔断器
SA – Energy-storage motor stroke (micro) switch
XT – Secondary wiring terminal
⊗– Signal light (user-provided)
FU – Fuse

1、2– 控制电源输入端，交流工作电源不需要直流电源模块，直流时 1 为“+”，2 为“–”；
3、4、5– 故障跳闸输出，4 为公共点，触点容量 AC250V、3A
*6、7、8、9 为断路器状态辅助触点输出端（客户选配）
Q– 欠电压 (瞬时或延时）脱扣器
F– 分励脱扣器 X– 闭合电磁铁
20：PE 保护接地
M– 储能电动机
21、22、23、24– 测量电压信号输入：分别对应 UN、UA、UB、UC（2M 控制器无电压测量功能，3M 控制器时有)
★ 25、26– 外接 N 相互感器（带剩余电流保护时有）
注：1、电源——若 Q、F、X 等的额定电压不同应分别接不同电源（虚线部分由用户自接）。必须按序对号接线，否则控制器将不能正常工作或可能造成损坏。
2、端子 34、35 可直接接电源（自动预储能），也可串接常开按钮后接电源（手控预储能）远程分合输出是由通讯功能控制。
1. 2 – Input end of control power supply; no DC power module is required for AC working power supply; for DC power supply, 1 for “+” and 2 for ”–”; 3, 4, 5 – Fault tripping output, 4 for common point, with a contact capacity of AC250V, 3A
*6, 7, 8 and 9 are auxiliary contact output terminals for circuit breaker status (optional for customer)
Q – Undervoltage (instantaneous or delayed) release
F – Shunt release
X – Closing electromagnet
M – Energy storage motor
20: Protective grounding (PE)
21, 22, 23, 24 – Measured voltage signal input: corresponding to UN, UA, UB and UC (Voltage measurement function is not provided to 2M trip unit, but provided to 3M trip unit).
★ 25, 26 – External N-phase transformer (available if residual current protection provided)
Note: 1. Power supply –If the rated voltage of Q, F, X, etc. is different, they should be connected to different power supplies (those in the dashed line are connected by the user). They should be wired in sequence, otherwise the trip unit will not work properly or may cause damage.
2. Terminals 34 and 35 can be directly connected to the power supply (automatic energy pre-storage) or connected in series to the normally open button and then connected to the power supply (manual energy pre-storage). The remote switching output is controlled by the communication function.
Wiring Diagram of 3H Trip Unit

3H型控制器接线图
Wiring Diagram of 3H Trip Unit

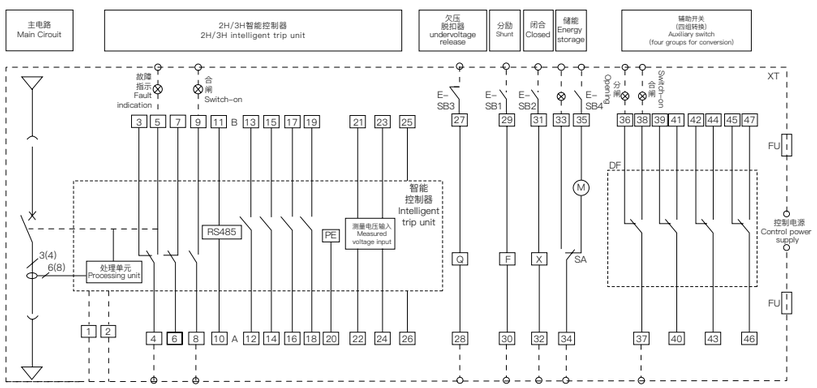

DF– 断路器辅助开关
SB1– 分励按钮（用户自备）
SB3– 欠压按钮（用户自备）
SB2– 合闸按钮（用户自备）
SB4– 储能按钮（用户自备）
DF – Auxiliary switch of circuit breaker
SB1 – Shunt button (user-provided)
SB3– Undervoltage button (user-provided)
SB2 – Switch-on button (user-provided)
SB4 – Energy storage button (user-provided)

SA– 储能电动机行程（微动）开关
XT– 二次接线端子
⊗– 信号灯（用户自备）
FU– 熔断器
SA – Energy-storage motor stroke (micro) switch
XT – Secondary wiring terminal
⊗– Signal light (user-provided)
FU – Fuse

1、2– 控制电源输入端，交流工作电源不需要直流电源模块，直流时 1 为“+”，2 为“–”；
3、4、5– 故障跳闸输出，4 为公共点，触点容量 AC250V、3A
*6、7、8、9 为断路器状态辅助触点输出端（客户选配）
10、11–RS485 通信接口，分别对应 RS485 通信接口 A、B
12、13– 继电器可编程输出触点 1
14、15– 继电器可编程输出触点 2
16、17– 继电器可编程输出触点 3
Q– 欠电压（瞬时或延时）脱扣器
18、19– 继电器可编程输出触点 4
F– 分励脱扣器
X– 闭合电磁铁
M 一储能电动机
20：PE 保护接地
21、22、23、24– 测量电压信号输入：分别对应 UN、UA、UB、UC
*25、26– 外接 N 相互感器（带剩余电流保护时有）
注：1、电源——若 Q、F、X 等的额定电压不同应分别接不同电源（虚线部分由用户自接）。必须按序对号接线，否则控制器将不能正常工作或可能造成损坏。
2、端子 34、35 可直接接电源（自动预储能），也可串接常开按钮后接电源（手控预储能）远程分合输出是由通讯功能控制。四组讯号继电器为可编程输出触点，触点容量 AC250V3A，标配定义如上图，（用户如需特殊定义可在选购时注明）
1. 2 – Input end of control power supply; no DC power module is required for AC working power supply; for DC power supply, 1 for “+” and 2 for “–”; 3, 4, 5 – Fault tripping output, 4 for common point, with a contact capacity of AC250V,3A
6, 7, 8 and 9 are auxiliary contact output terminals for circuit breaker status (optional for customer)
10. 11–RS485 communication port, corresponding to RS485 communication ports A and B respectively
12. 13 – Relay programmable output contact 1
14. 15 – Relay programmable output contact 2
16. 17 – Relay programmable output contact 3
18. 19 – Relay programmable output contact 4
Q – Undervoltage (instantaneous or delayed) release
F – Shunt release
X – Closing electromagnet
M – Energy storage motor
20: Protective grounding (PE)
21, 22, 23, 24 – Measured voltage signal input: corresponding to UN, UA, UB and UC respectively
25, 26 – External N-phase transformer (available if residual current protection provided)
Note: 1. Power supply –If the rated voltage of Q, F, X, etc. is different, they should be connected to different power supplies (those in the dashed line are connected by the user). They should be wired in sequence, otherwise the trip unit will not work properly or may cause damage.
2. Terminals 34 and 35 can be directly connected to the power supply (automatic energy pre-storage) or connected in series to the normally open button and then connected to the power supply (manual energy pre-storage). The remote switching output is controlled by the communication function.Four groups of signal relays are programmable output contacts, with a contact capacity of AC250V 3A. The standard configuration is defined as shown in the figure above, (users can specify special definitions when purchasing).

辅助开关形式
Auxiliary Switch Form

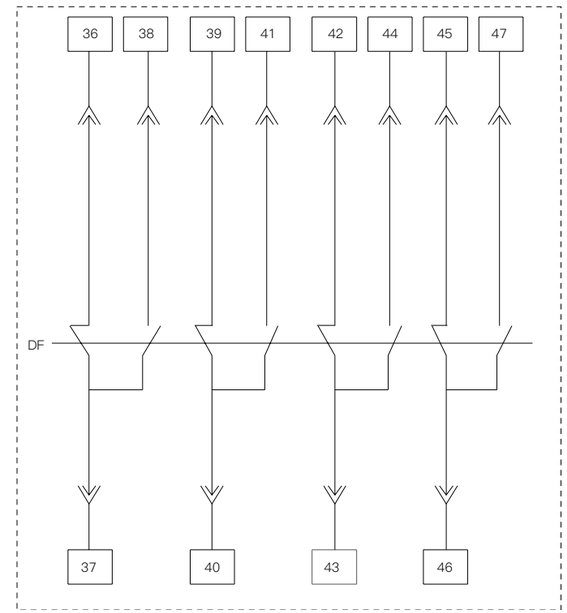

四组转换触头型式（标准配置）
Four groups of transfer contacts (standard configuration)

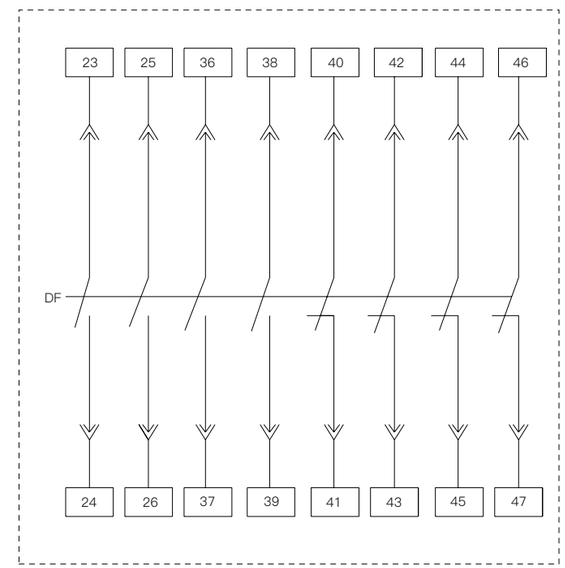

四常开四常闭（特殊配置）
Four normally open and four normally closed (special configuration)

辅助开关形式
Auxiliary Switch Form

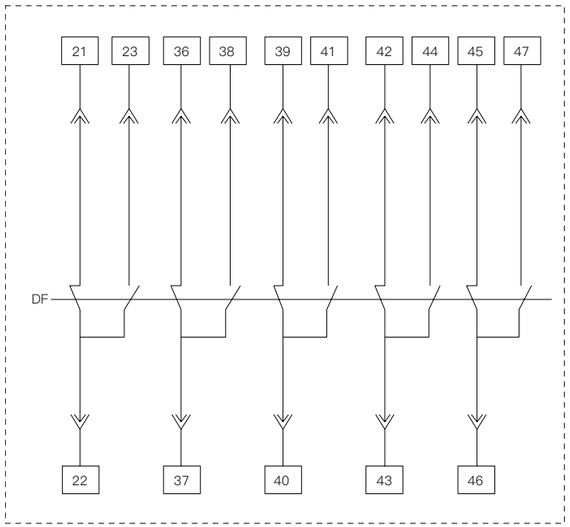

五组转换（特殊配置）
Five-group conversion (special configuration)

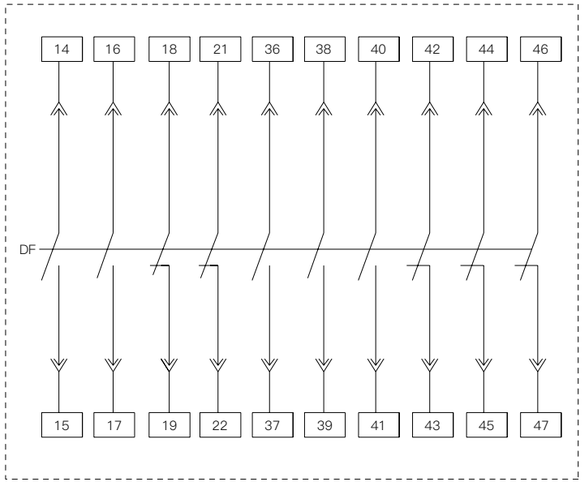

五常开五常闭（特殊配置）
Five normally open and five normally closed (special configuration)

辅助开关形式
Auxiliary Switch Form

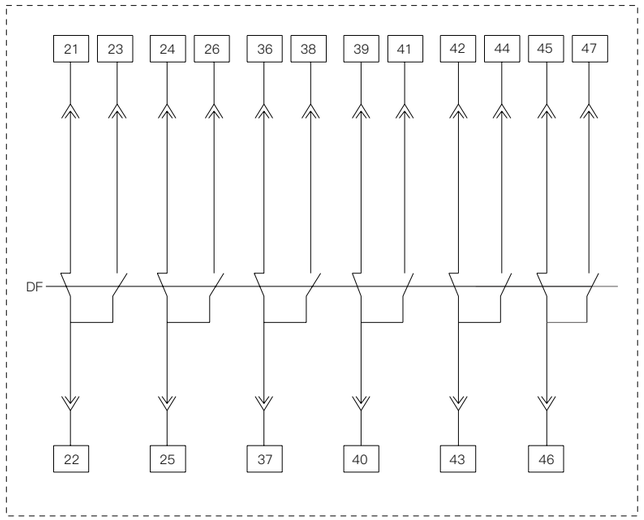

六组转换（特殊配置）
Six-group conversion (special configuration)

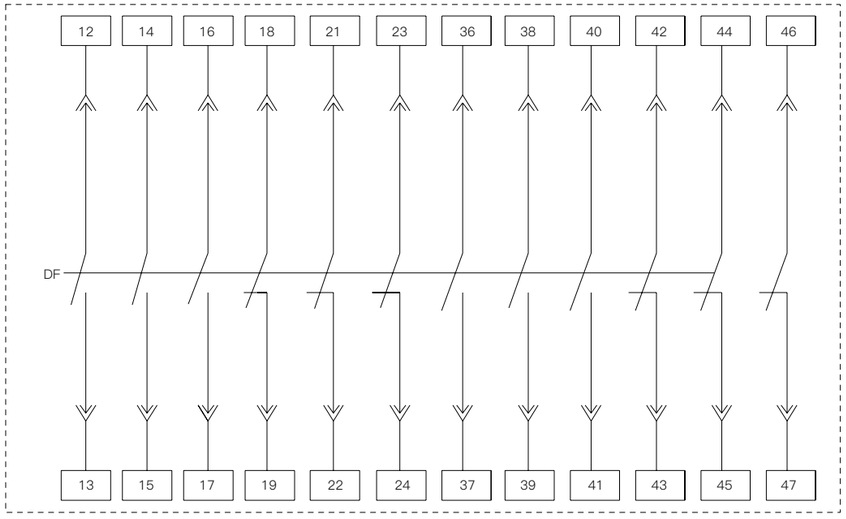

六常开六常闭（特殊配置）
Six normally open and six normally closed (special configuration)

外形与安装尺寸

Shape and Installation Dimensions

GYW6–1600 抽屉式外形及安装尺寸
Shape and Mounting Dimensions of GYW6–1600 Drawout Circuit Breaker

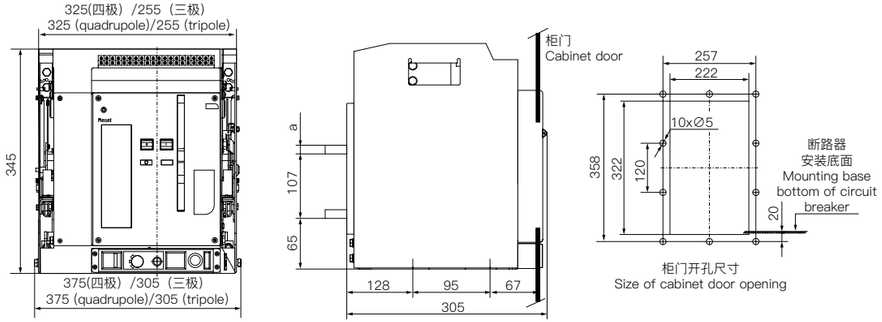

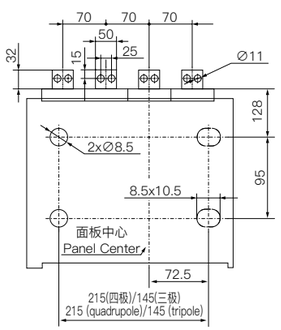

In	a(mm)
200A–800A	6
1000A	10
1250A~1600A	18

GYW6–1600 固定式外形及安装尺寸
Shape and Mounting Dimensions of GYW6–1600 Drawout Circuit Breaker

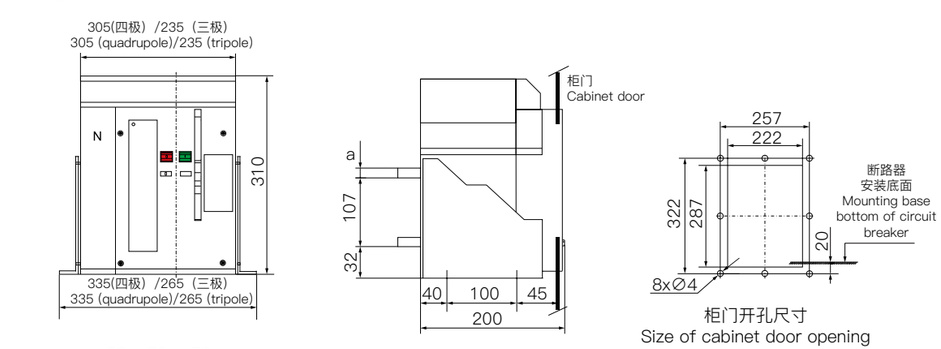

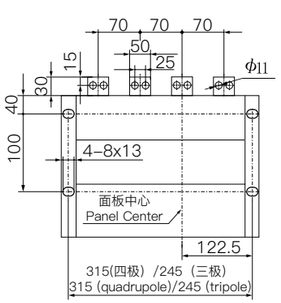

In	a(mm)
200A–800A	6
1000A	10
1250A~1600A	18

外形与安装尺寸

Shape and Installation Dimensions

GYW6–2500 抽屉式外形及安装尺寸
Shape and Mounting Dimensions of GYW6–2500 Drawout Circuit Breaker

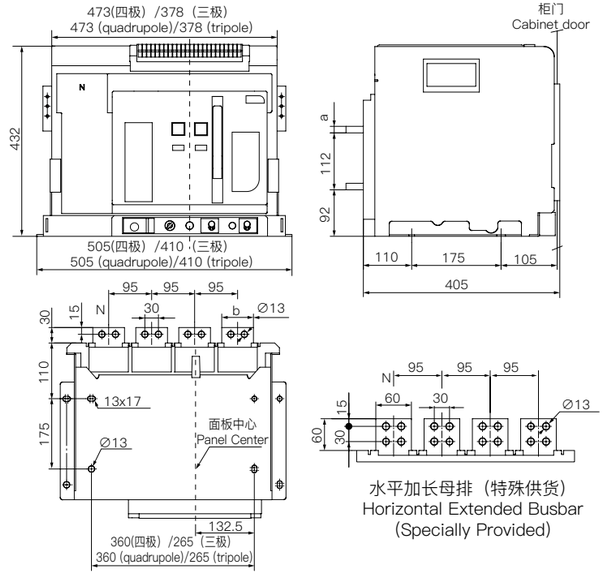

水平加长母排（特殊供货）
Horizontal Extended Busbar
(Specially Provided)

In	a(mm)	b(mm)
630A–800A	10	60
1000A–1600A	15	60
2000A	20	60
2500A	20	70

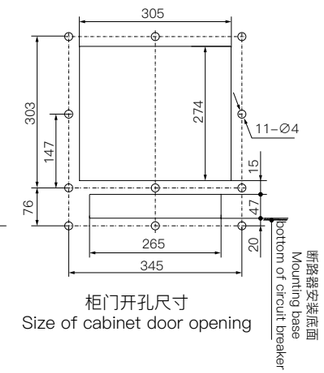

柜门开孔尺寸
Size of cabinet door opening

注：GYW6–2500 壳架的 2500A 常规订货默认为长排，2000A 及以下常规订货默认为短排 .
Note: Long copper bar is default for regular order of 2,500A GYW6–2500 ACB/MCCB, and short copper bar is default for regular order of 2,500A.

GYW6–2500 固定式外形及安装尺寸
Shape and Mounting Dimensions of GYW6–2500 Drawout Circuit Breaker

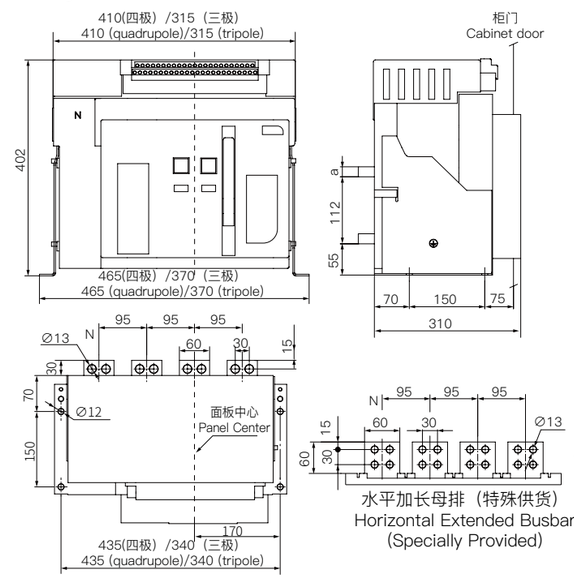

水平加长母排（特殊供货）
Horizontal Extended Busbar
(Specially Provided)

In	a(mm)
630A–800A	10
1000A–1600A	15
2000A–2500A	20

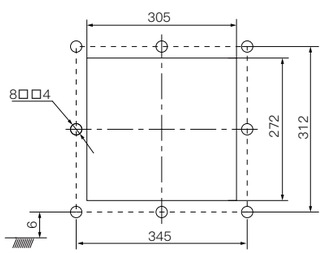

断路器安装底面
Mounting base
bottom of circuit breaker

柜门开孔尺寸
Size of cabinet door opening

注：GYW6–2500 壳架的 2500A 常规订货默认为长排，2000A 及以下常规订货默认为短排 .
Note: Long copper bar is default for regular order of 2,500A GYW6–2500 ACB/MCCB, and short copper bar is default for regular order of 2,500A.

外形与安装尺寸
Shape and Installation Dimensions

GYW6-3200 抽屉式外形及安装尺寸
Shape and Mounting Dimensions of GYW6-3200 Drawout Circuit Breaker

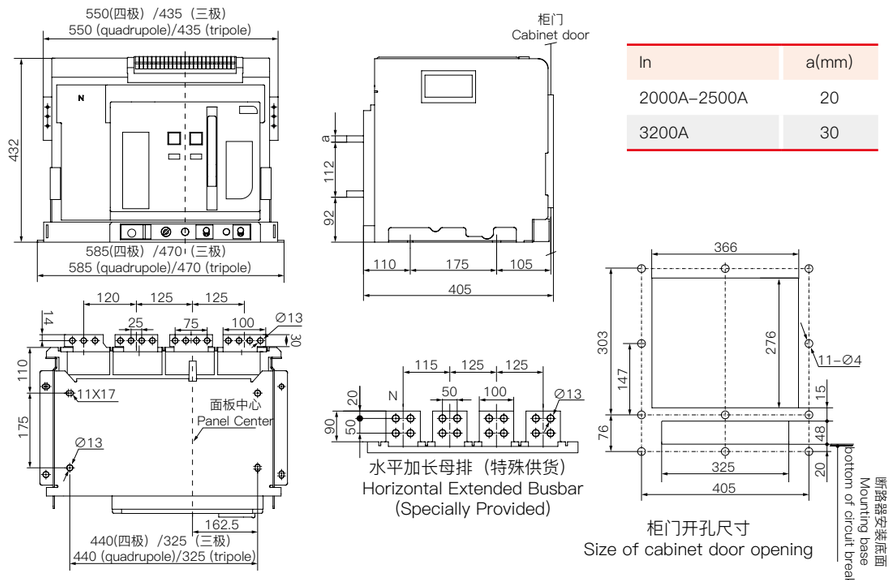

In	a(mm)
2000A-2500A	20
3200A	30

注：GYW6-3200 常规订货默认为短排 .
Note: Short copper bar is default for regular order of GYW6-3200.

GYW6-3200 固定式外形及安装尺寸
Shape and Mounting Dimensions of GYW6-3200 Drawout Circuit Breaker

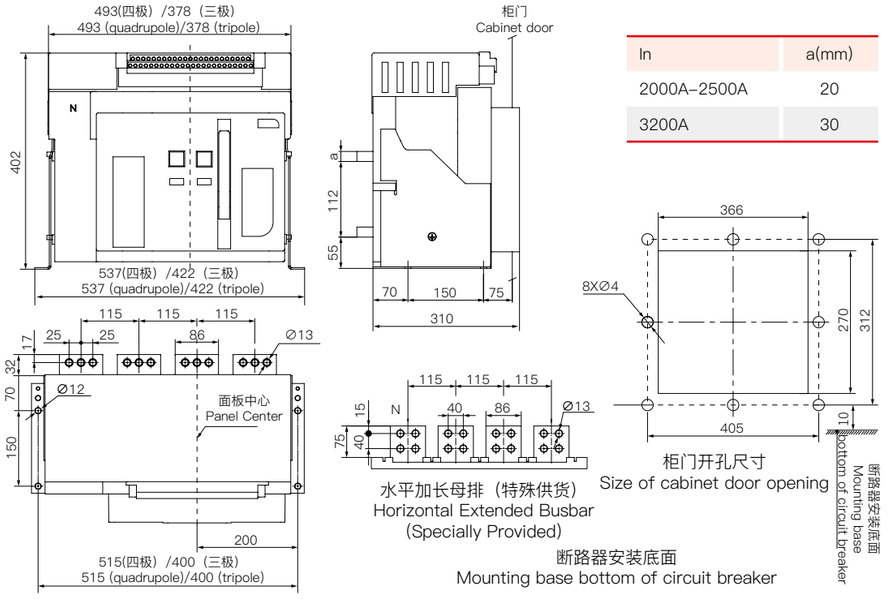

In	a(mm)
2000A-2500A	20
3200A	30

注：GYW6-3200 常规订货默认为短排 .
Note: Short copper bar is default for regular order of GYW6-3200.

外形与安装尺寸
Shape and Installation Dimensions

GYW6-4000/3P 抽屉式外形及安装尺寸
Shape and Mounting Dimensions of GYW6-4000/3P Drawout Circuit Breaker

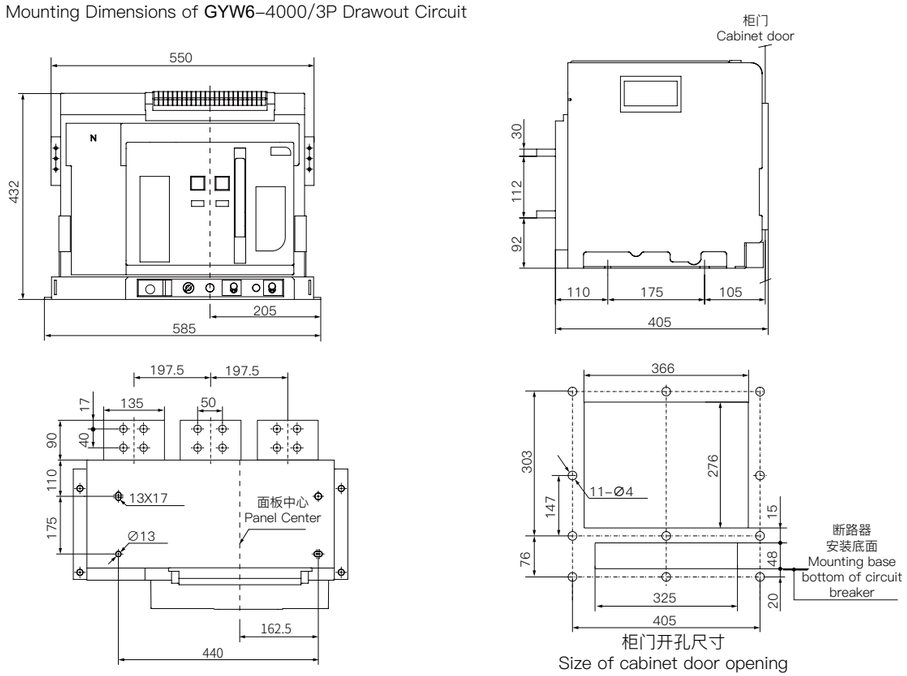

GYW6-4000/4P 抽屉式外形及安装尺寸
Shape and Mounting Dimensions of GYW6-4000/4P Drawout Circuit Breaker

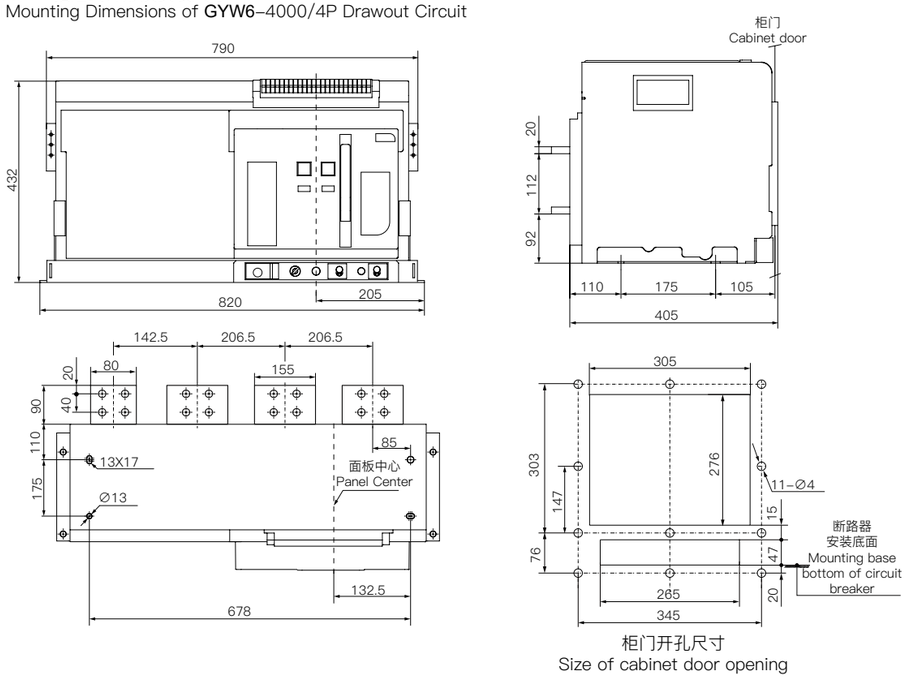

外形与安装尺寸
Shape and Installation Dimensions

GYW6-6300(4000A、5000A) 抽屉式外形及安装尺寸
Shape and Mounting Dimensions of GYW6-6300 Drawout Circuit Breaker (4,000A,5,000A)

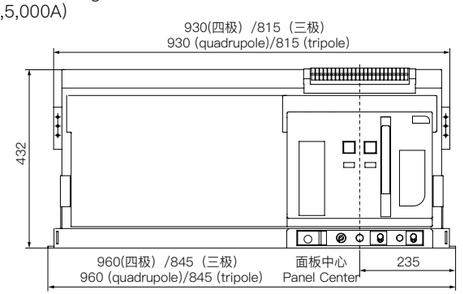

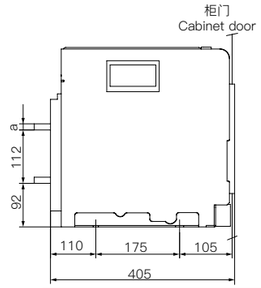

In	a(mm)
4000A	20
5000A	30

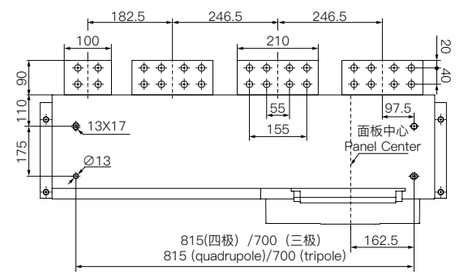

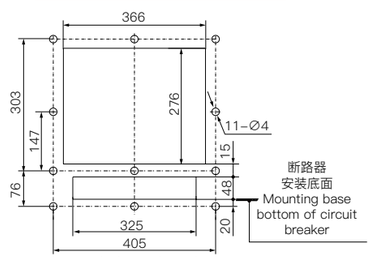

柜门开孔尺寸
Size of cabinet door opening

GYW6-6300(6300A) 抽屉式外形及安装尺寸
Shape and Mounting Dimensions of GYW6-6300 Drawout Circuit Breaker (6,300A)

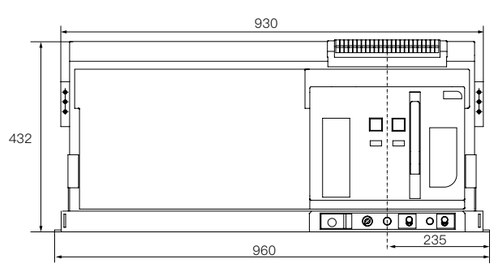

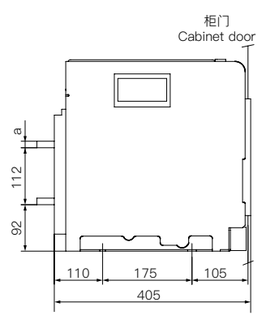

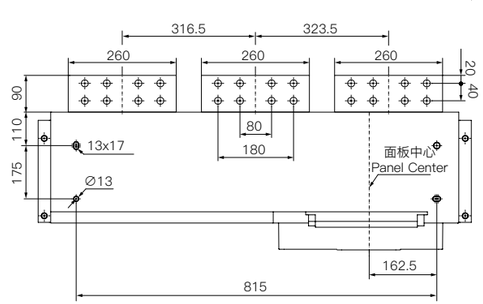

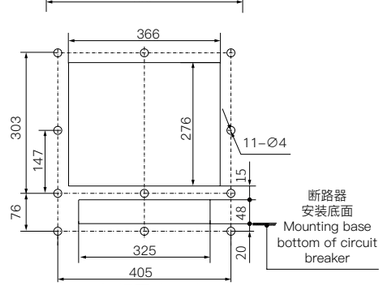

柜门开孔尺寸
Size of cabinet door opening

GYW6 系列万能式断路器
GYW6 series universal circuit breaker

用户连接铜排规格、数量 /40℃
Specifications and quantity of copper bar for user connection at 40 ℃

额定壳架等级电流 Inm(A) Rated current Inm (A) of ACB/MCCB	额定工作电流 In (A) Rated operating current In (A)	铜排规格 Copper bar size		额定壳架等级电流 Inm(A) Rated current Inm (A) of ACB/MCCB	额定工作电流 In(A) Rated operating current In (A)	铜牌规格 Copper bar size	
		尺寸 Size	数量 Qty			尺寸 Size	数量 Qty
1600	200A	20×5	1	2500	2000A	60×10	3
	400A	50×5	1		2500A	60×10	4
	630A	40×5	2	3200	2000A	100×10	2
	800A	50×5	2		2500A	100×10	2
	1000A	40×5	3		3200A	100×10	4
	1250A	40×5	4		3200A	100×10	5
	1600A	50×10	2	4000	3600A	100×10	5
2500	630A	60×5	2		4000A	100×10	5
	800A	60×5	2		4000A	100×10	5
	1000A	60×5	2	6300	5000A	100×10	6
	1250A	60×10	2		6300A	100×10	6
	1600A	60×10	2				

安装使用与维护
Installation, Operation and Maintenance

安装

1. 安装前先检查断路器的规格是否符合要求；
2. 安装前先用 500V 兆欧表检查断路器的绝缘电阻，在周围介质温度 20±5℃和相对湿度 50%–70% 时，应不小于 10 兆欧，否则应烘干，待绝缘电阻达到要求方可使用；
3. 断路器安装时，其底座应位于水平位置，并用 M10 螺钉固定；
4. 安装时对断路器进行可靠的保护接地，接地处有明显的接地标识；
5. 断路器的上进线或下进线，均不改变其技术性能；
6. 断路器安装完毕按有关接线图接线后，在主电路通电前（抽屉式断路器抽屉座上的指示在试验位置）应进行下列操作：

a. 检查欠电压、分励脱扣器、闭合电磁铁、电动操作机构电压是否相符（断路器合闸前，欠电压脱扣器必须通电）；

b. 上下扳动断路器手柄 7 次以后，并伴随“咔嗒”声响，面板显示为“贮能”，即贮能结束，按下“1”按钮或闭合电磁铁通电，断路器能可靠闭合（在控制器复位按钮可靠复位的情况下 ），扳动手柄能再次预贮能；

C. 电动机通电操作至面板显示“贮能”，并伴随“咔嗒”声响，贮能结束，电动机自动断电，按下“1”按钮或闭合电磁铁通电，断路器能可靠闭合；

d. 断路器闭合后，无论用欠电压、分励脱扣器、面板上的“O”按钮、智能控制器的试验脱扣均能使断路器断开。

智能控制器的应用

1. 控制器的整定

控制器长延时整定：按“清灯”建后，按“设定”建，直到长延时状态指示灯亮，显示长延时电流整定值，一般为 In，电流整定范围为（0.4–1）In，根据需要按“+”、“–”键，调整到需要的电流值，按“贮存”键，贮存指示灯亮一次后熄灭，表示长延时电流整定完毕。

长延时时间整定：长延时电流整定结束后，再按一次“设定”键，长延时时间状态指示灯亮，显示长延时时间整定值，按“+”、“–”键，整定到需要的时间档位，按“贮存”键，贮存指示灯亮一次后熄灭，表示长延时时间整定完毕；负载监控、短延时、瞬时、接地保护等电流值和时间值，整定方法同上。接地故障整定到“OFF”时，表示接地故障只报警不脱扣；瞬时保护整定到“OFF”时，表示关闭瞬时保护功能关闭；在整定过程中，一旦有故障信号，则自动封锁功能，进入故障处理状态。

控制器的各种参数不得交叉设定，控制器保护优先级如下：长延时 < 短延时 < 瞬时。对用于重合闸的，ILC2 设定值小于 ILC1，控制器参数全部整定好后，再按一次“清灯”键，或断电复位一次，使控制器处于运行状态。

2. 控制器试验

控制器参数设定后，在断路器运行前，用户根据需要，可以对控制器各种保护功能进行检查，控制器试验有脱扣 / 不脱扣选择，按“脱扣”键试验时，断路器分闸，按“不脱扣”键试验时，则不发出脱扣信号，断路器不分闸。

过载试验，按“设定”键到长延时状态，查看过载整定值然后至其他然后至其他电流状态，按“+”、“–”键，调整电流到大于 1.3Ilr1 时，按一下“试验”键即可进入过载试验状态，控制器按反时限规律延时动作，并指示故障类别和试验状态。其他特性试验类同，试验结束后按一下“清灯”键进入正常运行状态，同时必须按一下机械复位按钮，放可闭合断路器。

3. 控制器其他使用原则

控制器在整定、检查状态，1 分钟内不进行按键操作，则自动进入正常运行状态，同时一旦出现故障，则自动封锁功能，进入故障处理状态。

a. 设定检查

控制器“清灯”后，在无故障情况下，连续按“设定”键，循环指示各种状态和对应的电流值和时间值，检查好后按一下“清灯”键，（1 分钟内不进行按键操作自动进入正常运行状态）。

b. 电网运行电流和电压检查

控制器“清灯”后，在无故障情况下，连续按“选择 1”（选择）键，循环显示各相运行电流和接地电流值，正常显示最大电流值，连续按“选择 2”键，循环显示各线电压，正常显示最大线电压。

控制器“清灯”后，按一下“故障检查”键，则显示上一次故障状态和故障电流，试验或故障脱扣后，按“选择 1”（选择）键，可循环显示试验或故障的电流和时间值，试验状态不记忆。

C. 复位

断路器合闸前必须首先按一下“清灯”键，使控制器进入正常运行状态，然后再按一下机械“复位”按钮，方可使断路器闭合。

4. 用户根据表四、表五、表六对产品的特性设定有特定要求，可在订货时说明，出厂时按订要求整定。
5. 用户订货无说明要求，则控制器默认选用 2M 型，出厂整定值如下：

a. 长延时 Ir1 整定为 1In，1.5Ir1 动作时间整定为 15s；

b. 短延时 Ir2 整定为 8In，定时限为 0.4s；

c. 瞬时 Ir3 整定为 12In；

d. 接地故障 Ir4 整定为 0.4In，动作时间整定为“OFF”，只有显示电流而不断开断路器。

6. 用户在使用过程中如需对出厂整定值进行更改，在充分了解本产品后，允许通过控制器按表四自行设定。

Installation

1. Check whether the circuit breaker size is satisfactory before installation;
2. Test the insulation resistance of the circuit breaker with a 500V megohmmeter befor einstallation; when the surrounding medium temperature is 20 ± 5 ℃ and the relative humidity is 50%–70%, it should not be less than 10 megohm; otherwise the circuit breaker should be dried and used only when the insulation resistance becomes acceptable;
3. When installing the circuit breaker, keep its base horizontal and fix it with M10 screws;
4. During installation, ground the circuit breaker reliably, and make a clear mark at the grounding point;
5. The technical performance of the circuit breaker will not be changed whether it is the upper or lower incoming wire;
6. After the circuit breaker is installed and wired according to the relevant wiring diagram, the following operations should be performed before the main circuit is powered on (the instructor on the drawer seat of the drawout circuit breaker is in the test position):

a. Check whether the voltage of the undervoltage release, shunt release, closing electromagnet and electric operating mechanism are consistent (the undervoltage release shall be powered on before the circuit breaker is switched on);

b. After pulling the breaker handle up and down for 7 times with ”click” sound, ”Energy Storage is shown on the panel, indicating the end of energy storage; press the ”1” button or power off the electromagnet, and the circuit breaker will be reliably switched on (in the case of reliable reset of the trip unit reset button); pull the handle to store the energy again;

c. When the motor is powered on and the panel displays Energy Storage” with click sound, the energy storage ends and the motor automatically powers off; press the “1” button or switch on the electromagnet,and the circuit breaker will be reliably switched on;

d. After the circuit breaker is turned on, it can be disconnected by undervoltage release, shunt release, O button on the panel, or test release of the intelligent trip unit.

Application of intelligent trip unit

1. Trip unit setting

Trip unit Long Delay Setting: After pressing the ”Clear Indicator” button, press the ”Set”button until the long delay status indicator is on and the long–delay current setting value is displayed, generally defined as In; the current setting range is (0.4–1) In, press the + and – buttons as needed to adjust to the desired current value; press the Store button, and the storage indicator will light up once and then go out, indicating that the long delay current setting is completed.

Long Delay Time Setting: After the end of long–delay current setting, press the ”Set” button again, the long–delay time status indicator will light up and the long delay time setting value will be displayed; press the ”+” and ”–” buttons to set to the required time, press the Storage” button, and the storage indicator will light up once and then go out, indicating that the long delay time setting is completed; such setting method is applicable to load monitoring, short delay, instantaneous, grounding protection and other current values and time values. When the grounding fault is set to ”OFF”, it indicates that there is only alarm for grounding fault without tripping. When the instantaneous protection is set to OFF”, it indicates that the instantaneous protection function is disabled. In the setting process, if there is a fault signal, it automatically blocks the function and enters the fault handling state.

The trip unit parameters cannot be crossed. The trip unit protection priorities are as follows: long delay < short delay < instantaneous. For re–switching on, the set value of ILC2 is less than that of ILC1; after all the trip unit parameters are set, press the ”Clear Light” button again, or power off and reset once to make the trip unit in operation.

2. Trip unit test

After the trip unit parameters are set, the user can check the protection functions of the trip unit as needed before the circuit breaker runs. There are With/Without Trip options for trip unit test. When pressing the ”Without Trip” button for testing, no tripping signal will be issued and the circuit breaker will not be switched off.

For overload test, press the ”Set” button to the long delay state, check the overload setting value and then set to other current states, press the ”+ and – buttons, adjust the current to greater than 1.3Ilr1, press the ”Test” button to enter the overload test state, the trip unit will delay its action according to the inverse time rule, and indicate the fault category and test state. Such steps are applicable to other characteristic tests. At the end of the test, press the ”Clear Light” button to enter the normal operation state, and press the ”Mechanical Reset” button to switch on the circuit breaker.

3. Other operation principles of the trip unit

When the trip unit is in the setting and checking state, the trip unit will automatically enter the normal operation state if no key operation is performed within 1 min and will automatically lock the functions and enter the fault handling state once the fault occurs.

a. Setting and checking

After the trip unit clears the indicator”, in the case of no fault, continuously press the ”Set” button to cycle through states and

corresponding current and time values, check them, and press the ”Clear Indicator” button (the system will automatically enter normal operation state without any button operation within 1 min).

b. Check the operating current and voltage of the power grid After the trip unit clears the indicators, in the case of no fault, press the Select 1 (Select) button continuously to circularly display the operating current and grounding current values of each phase, and then press the ”Select 2” button to circularly display the voltage of each circuit (specifically maximum voltage in case of normal operation).

After the trip unit ”clears the indicators”, press the ”Fault Check” button to display the last fault state and fault current. After the test or fault tripping, press the ”Select 1” (Select) button to circularly display the current and time values of the test or fault, with the test state not memorized.

c.Reset

Before switching on the circuit breaker, press the “Clear Indicator” button firstly to put the trip unit into normal operation, and then press the ”Mechanical Reset” button to make the circuit breaker switched on.

4. If users have specific requirements for the characteristics of the product according to Tables IV, V and VI, they can be specified when ordering and the product will be adjusted according to the ordering requirements before delivery.

5. If there are no specific requirements indicated in the order by users, the trip unit will be Type 2M by default, and the factory settings are as follows:

a. Long delay Irl is set to 1In and 1.5Ir1 action time set to 15s;

b. Short delay Ir2 is set to 8In and the definite time set to 0.4s;

c. Instantaneous Ir3 is set to 12In;

d. The grounding fault Ir4 is set to 0.4In and the action time set to ”OFF”, and the circuit breaker

6. If users need to make changes to the factory settings during use, after fully understanding this product, they can be set through the trip unit according to Table I IV .

Common Faults and Troubleshooting

常见故障及排除方法
Common Faults and Troubleshooting

序号 S/N	故障现象 Fault Phenomenon	产生原因 Causes	排除方法 Troubleshooting Method
1	断路器不能合闸 The circuit breaker cannot be switched on.	欠压脱扣器无电源电压，未接通。 智能控制器动作后，控制器面板上部的红色按钮没有复位。 操作机构未储能。 抽屉式本体未处于“连接”或‘试验”位置 “断开位置钥匙锁”处于锁闭状态 The undervoltage release has no power supply voltage and is not connected. After the intelligent trip unit is activated, the red button on the upper part of the trip unit panel is not reset. The operating mechanism fails to store energy. The body of drawout circuit is not in the breaker ”Connect” or ”Test” position. The “Disconnect Position Key Lock” is locked.	检查线路，接通欠压脱扣器电源。 按下复位按钮 手动或电动使机构储能 用摇手柄将断路器本体摇至“连接”或“试验”位置 用专用钥匙打开钥匙锁 Check the circuit and connect the power supply of the undervoltage release. Press the ”Reset” button Manual or electric energy storage mechanism Turn the circuit breaker body to the ”Connect”or ”Test” position with the crank handle. Unlock the keylock with a dedicated key
2	断路器不能电动储能 The circuit breaker fails to store energy electrically.	电动操作机构电源未接通电源容量不够 The power supply of the electric operating mechanism is not connected. Insufficient power supply capacity	检查线路，接通电源检查操作电压应大于85%Ue Check the circuit and power on check that the operating voltage should be greater than 85% Ue
3	闭合电磁铁不能使断路器合闸 The closing electromagnet fails to switch on the circuit breaker	无电源电压电源容量不够。 No power supply voltage Insufficient capacity power supply	检查线路，接通电源检查操作电压应大于85%Ue Check the circuit and power on check that the operating voltage should be greater than 85% Ue
4	分励脱扣器不能使断路器断开 The shunt release cannot disconnect the circuit breaker.	无电源电压电源容量不够。 No power supply voltage Insufficient power supply capacity	检查线路，接通电源检查操作电压应大于70%Ue Check the circuit and power on check that the operating voltage should be greater than 70% Ue
5	故障电流均超过长延时、短延时、瞬时整定值，只出现瞬时动作，无短延时、长延时动作 The fault current exceeds the long delay, short delay and instantaneous setting value, and only instantaneous action occurs, without short-delay and long-delay action.	长延时、短延时、瞬时整定值设定值设定不合理，整定在同一电流值范围 The long delay, short delay and instantaneous setting values are unreasonable and set within the same current value range.	按Ir1<Ir2<Ir3的原则及考虑其动作范围，重新设定 Reset them according to the principle of Ir1 < Ir2< Ir3 and considering their range of action.
6	断路器频繁跳闸 The circuit breaker trips frequently	现场过负荷运行引起过载保护跳闸，由于过载热记忆功能未能及时断电清除，又重新合闸。 Overload protective tripping is caused by overloaded operation. As the overload thermal memory is not be cleared in time by power-off, the circuit breaker is switched on again.	控制器断电一次，或30min后再合闸断路器 Power off the trip unit once, or switch on the circuit breaker after 30 min
7	抽屉式断路器摇手柄不能插入断路器 The rocker handle of the drawout circuit breaker cannot be inserted into the circuit breaker.	抽屉式导轨或断路器本体没有完全推进去 The guide rail or circuit breaker body is not completely pushed in.	把导轨或断路器本体推到底 Push the guide rail or circuit breaker body to the end
8	抽屉式断路器本体在断开位置时不能抽出断路器 The drawout circuit breaker body cannot be pulled out when it is in the ”Disconnect” position.	摇手柄未拔出断路器没有完全到达“分离”位置 The rocker handle is not pulled out and the circuit breaker does not completely reach the Separate” position.	拔出摇手柄将断路器完全摇到“分离”位置。 Pull out the rocker handle rotate the circuit breaker to the Separate position.

订货规范
Ordering Specifications

（请在□内打√或填上数字）
(Please tick √ or fill in the number in □)

客户名称 Customer Name			订购数量 Qty. Ordered:				订购日期 Ordering Date:			
型号规格 Model & Spec.	GYW6–1600 □		GYW6–2500 □		GYW6–3200 □		GYW6–4000 □		GYW6–6300 □	
极数 Number of poles	□ 3: 三极 Tripole	□ 4: 四极 Quadrupole	□ 3: 三极 Tripole	□ 4: 四极 Quadrupole	□ 3: 三极 Tripole	□ 4: 四极 Quadrupole	□ 3: 三极 Tripole	□ 4: 四极 Quadrupole	□ 3: 三极 Tripole	□ 4: 四极 Quadrupole
额定电流 (A) Rated current (A)	□ 200 □ 400 □ 1630 □ 800 □ 1000 □ 1250 □ 1600	□ 200 □ 400 □ 630 □ 800 □ 1000 □ 1250 □ 1600	□ 630 □ 800 □ 1000 □ 1250 □ 1600 □ 2000 □ 2500	□ 630 □ 800 □ 1000 □ 1250 □ 1600 □ 2000 □ 2500	□ 2000 □ 2500 □ 3200	□ 2000 □ 2500 □ 3200	□ 3200 □ 3600 □ 4000	□ 3200 □ 3600 □ 4000	□ 4000 □ 5000 □ 6300	□ 4000 □ 5000
安装方式 Installation Mode	□固定式 Fixed				□抽屉式 Drawout					
额定电压 (V) Rated voltage (V)	□ AC400V				□ AC690V					
控制器 Controller	数码管显示 Digital tube display	□ 2M 型 （■默认配置）	保护特性 1（四段保护）：过载长延时保护 Ir；短路短延时保护 Is；短路瞬时保护 Ii；接地故障保护 Ig 保护特性 2：负载监控（两种方式）、□配电保护（选配）、预报警（两种方式）、N 相保护、MCR 接通分断和模拟脱扣保护。 功能特性：热记忆特性、参数设定功能、试验操作功能、故障跳闸报警、各种状态指示和数值显示；电流表功能操作、电压表功能操作、预报警、自诊断功能、全灯检查、日期设置功能。 Protection Feature 1 (four-section protection): Overload long-delayed protection Ir; short-circuit delayed protection Is; short-circuit instantaneous protection Ii; grounding fault protection Ig Protection Feature 2: Load monitoring (two modes), □ distribution protection (optional), pre-alarm (two modes), N-phase protection, MCR switch-on/off and analog trip protection. Functional characteristics: thermal memory, parameter setting, test operation, fault tripping alarm, various status indication and numerical display; ammeter function operation, voltmeter function operation, pre-alarm, self-diagnosis, all indicator checking, and date setting.								
		□ 2H 型	包含 2M 型基本功能及一般功能。 通讯功能（遥测、遥调、遥控、遥信）、变位记录等，具有上述控制器型号所有功能。 Including the basic and general functions of Type 2M. Communication functions (remote monitoring, remote regulation, remote control, remote communication), displacement recording, etc., with all the functions of the above trip unit models.							
	液晶屏显示 LCD screen Display	□ 3M 型（选配）	包含 2M 型基本功能及一般功能； 漏电报警、过压保护、欠压保护、电压不平衡保护、欠频保护、过频保护、逆功率保护、相序保护； 测量功能：实时信测 (电压、电压不平衡率、电流、电流不平衡率、相序、频率、功率、功率因数、电能）、需量测量、谐波测量、测量表设置、时钟设置等。 Including the basic and general functions of Type 2M; Residual current alarm, over-voltage protection, under-voltage protection, voltage imbalance protection, under-frequency protection, over-frequency protection, reverse power protection, phase sequence protection; measurement functions: real-time measurement (voltage, voltage imbalance rate, current, current unbalance rate, phase sequence, frequency, power, power factor, electric energy), demand measurement, harmonic measurement, measuring meter setting, clock setting, etc.							
		□ 3H 型 （通讯，选配）	包含 3M 型基本功能及一般功能。 通讯功能 (遥测、遥调、遥控、遥信）、变位记录等，具有上述控制器型号所有功能。 Including the basic and general functions of Type 3M. Communication functions (remote monitoring, remote regulation, remote control, remote communication), displacement recording, etc., with all the functions of the above trip unit models.							
	控制器电源电压 Power supply voltage of the trip unit		□ AC230V □ AC400V □ DC110V □ DC220V							
欠压脱扣器 Undervoltage release			□助吸式 □ Pull-in-assisted type	□瞬时 Instantane ous	□ AC230V □ AC400V					
			□自吸式 Self-pull-in type		□ AC230V □ AC400V □ 0s □ 0.3s □ 0.5s □ 1s □ 3s □ 5s					
分励脱扣器 Shunt release			□ AC230V □ AC400V □ DC110V □ DC220V							
闭合电磁铁 Closing electromagnet			AC230V □ AC400V □ DC110V □ DC220V							
1600 壳架欠压脱扣器 Underpressure release of 1,600 ACB/MCCB			自吸式欠压脱扣器：□瞬时 □延时（□ 0.3s □ 0.5s □ 1s □ 2s □ 3s 可选不可调） Self-pull-in undervoltage release: □ Instantaneous □ Delayed (□ 0.3s □ 0.5s □ 1s □ 2s □ 3s optional, non-adjustable)							