FILE:	2023-D01\ULO

REV	E.C.N NO.	CONTENT	CHK	DATE

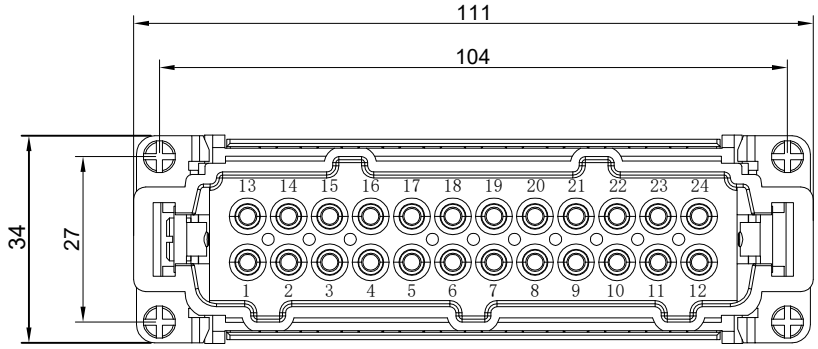

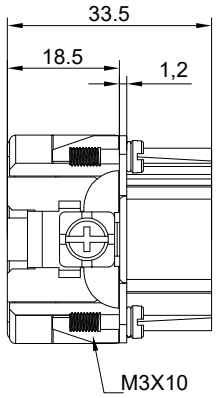

Technical characteristics:
Specifications
DIN EN 60 664-1
DIN EN 61 984

Inserts
1. Number of contacts: 24+PE
2. Rated Current: 16A
3. Rated Voltage: 500V
4. Pollution degree: 3
5. Rated impulse voltage: 6KV
6. Insulation resistance: ≥ 10^{10} Ω
7. Material: Polycarbonate
8. Rated voltage acc. to UL/CSA: 600V
9. Limiting temperatures: -40℃~～+125℃
10. Flammability acc. to UL94: V0
11. Mechanical working life (mating cyales): ≥500

Contacts
1. Material: Copper alloy
2. Surface: hard-silver plated
3. Contact resistance: ≤1m Ω
4. Terminal: Crimp terminal
5. Wire gauge: 0.14-4.0mm² (26-12AWG)
6. Stripping length: 7.5mm
7. Rohs Compliance

Note: Crimp contact pins should order separately

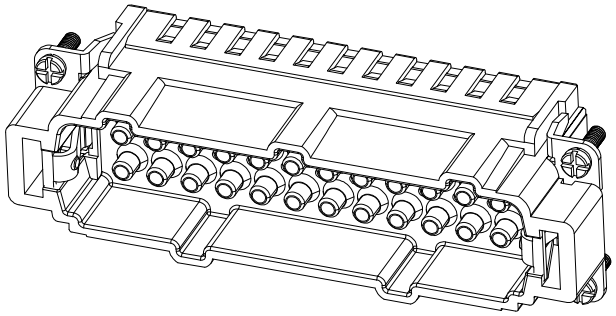

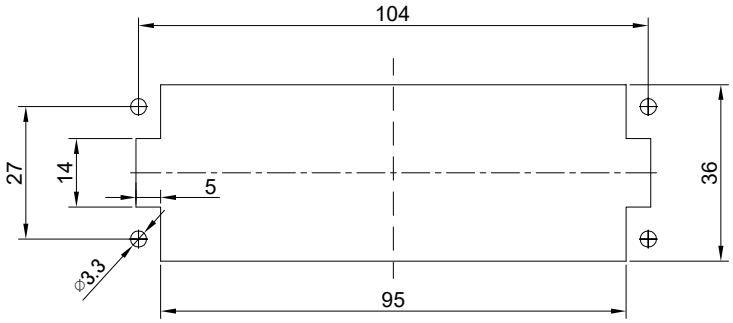

面板安装开孔图

ITEM	NAME OF PART		NO. OF PART	Q"TY	MATERIAL		NOTE
DWG.	LZM	DATE	23.11.09	UNITS	MM	SHEET/OF	1 / 2
CHK.		DATE		SCALE	1 : 1	A4	
APP.		DATE		NAME	ULO-HD02-HE-048-MC		
NINGBO ULO ELECTRONICS CO.,LTD. 宁波欧路电子有限公司				DWGNO.			

FILE:	2023-D01\ULO

REV	E.C.N NO.	CONTENT	CHK	DATE

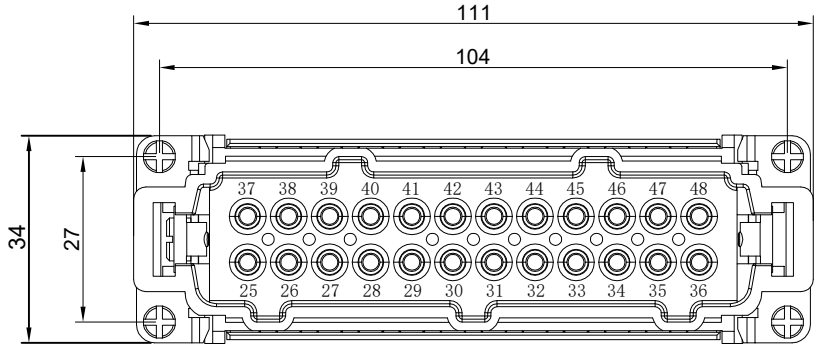

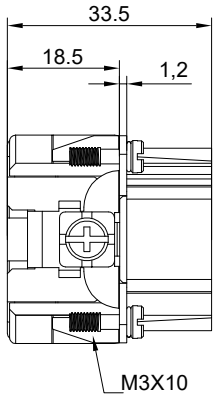

Technical characteristics:
Specifications
DIN EN 60 664-1
DIN EN 61 984

Inserts
1. Number of contacts: 24+PE
2. Rated Current: 16A
3. Rated Voltage: 500V
4. Pollution degree: 3
5. Rated impulse voltage: 6KV
6. Insulation resistance: ≥ 10^{10} Ω
7. Material: Polycarbonate
8. Rated voltage acc. to UL/CSA: 600V
9. Limiting temperatures: -40℃~～+125℃
10. Flammability acc. to UL94: V0
11. Mechanical working life (mating cyales): ≥500

Contacts
1. Material: Copper alloy
2. Surface: hard-silver plated
3. Contact resistance: ≤1m Ω
4. Terminal: Crimp terminal
5. Wire gauge: 0.14-4.0mm² (26-12AWG)
6. Stripping length: 7.5mm
7. Rohs Compliance

Note: Crimp contact pins should order separately

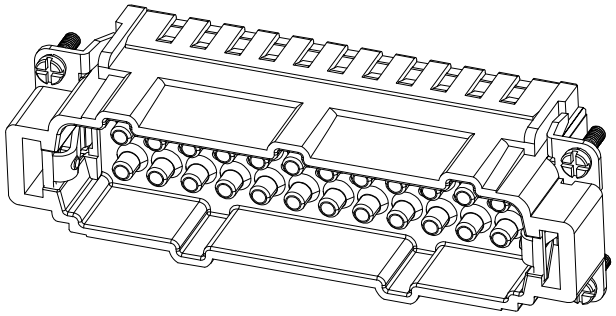

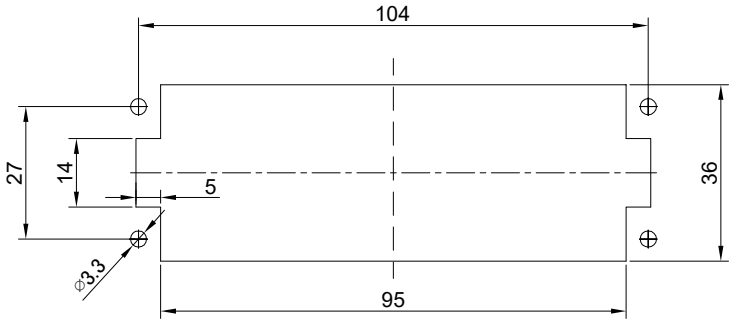

面板安装开孔图

ITEM	NAME OF PART		NO. OF PART	Q"TY	MATERIAL		NOTE
DWG.	LZM	DATE	23.11.09	UNITS	MM	SHEET/OF	2/2
CHK.		DATE		SCALE	1:1	A4	
APP.		DATE		NAME	ULO-HD02-HE-048-MC		
NINGBO ULO ELECTRONICS CO.,LTD. 宁波欧路电子有限公司				DWGNO.			