产品合格证

符合标准: GB/T 14048.4

检 验 员: 检01

出厂日期: 见产品或包装

本产品经检验合格, 准予出厂。

C-Lin 欣灵电气股份有限公司 XINLING ELECTRIC CO.,LTD

产品合格证

C-Lin
欣灵电气股份有限公司
XINLING ELECTRICAL CO., LTD.
地址：浙江省乐清经济开发区纬十九路328号
电话：0577-62735555　传真：0577-62722963
官网：www.c-lin.cn　E-mail:xl@xinling.com
技术咨询：400-8236-775

RECYCLABLE

国家高新技术企业 浙江省知名商号

C-Lin 欣灵

使用说明书
Products Instructions

# HHD1B

Motor Protector

We sincerely appreciate your use of C-Lin -brand motor protector. Please read the instruction manual before using the product!

07A118R0

## I. Overview

The HHD1B series motor protector (hereinafter referred to as the protector) is the latest product of domestic low - voltage motor protectors. This product is developed by adopting internationally advanced integrated circuits and microcomputer technologies such as single - chip microcomputer and EEPROM storage. Therefore, it features high - precision parameter measurement, accurate and reliable fault identification, complete protection functions, intuitive parameter display, and is equipped with an RS485 serial digital interface, enabling functions such as computer communication, detection, and control. It is currently the most ideal motor protection product, widely applicable to industries such as petroleum, chemical, electric power, metallurgy, coal, light industry, and textile.

This series of protectors complies with the requirements of the GB/T 14048.4 standard.

## II. Normal Working Conditions and Installation Conditions

1. Altitude: Not exceeding 2000m.
2. Ambient air temperature: - 5℃～+40℃, and the average value within 24h does not exceed +35℃.
3. Atmospheric conditions: When the maximum temperature is +40℃, the relative air humidity does not exceed 50%. At lower temperatures, higher relative humidity is permissible. For example, at +20℃, the air humidity can reach 90%, and special measures should be taken for occasional condensation due to temperature changes.
4. Inclination of installation surface: The inclination of the installation surface to the vertical plane is not more than ±5°.
5. Pollution degree: 3.
6. Location requirements: In places without significant shaking, impact, and vibration.
7. Enclosure protection rating: IP40 (working surface).
8. Tripping class: 10A class.
9. EMC environment: A.



## III. Model Specifications

HH D 1 B-□□□

- Additional functions: "T" indicates RS485 communication interface, "B" indicates 4mA - 20mA transmission output.
- Structure form: "Z" indicates integral, "F" indicates split.
- Current range code: represented by 1, 2, 3, 4 (see Table 1).
- Derivative code.
- Design serial number.
- Motor protector.
- Enterprise identification.

Table 1

| Model specification | Setting current range Ie | Applicable motor power (kW) | Remarks |
|---|---|---|---|
| HHD1B-1 | 2～100A | 1～50 | 1. When selecting the protector specification, it should be determined according to the rated power of the motor.<br>2. The voltage specification selects AC220V or AC380V 50Hz, which is determined according to the voltage of the secondary circuit of the control motor.<br>3. For the protectors of HHD1B - 3 and 4, three current transformers with a transformation ratio of 5A must be installed. |
| HHD1B-2 | 40～200A | 20～100 | |
| HHD1B-3 | 80～400A | 40～200 | |
| HHD1B-4 | 160～800A | 80～400 | |

## IV. Product Description

Table 2

| Name | Description | | Remarks |
|---|---|---|---|
| Display | High-definition digital LED display | | |
| Control power supply | AC220V, AC380V, 50Hz | | Allowable fluctuation range: 85% - 110% |
| Power | <5VA | | |
| Contact capacity | AC 220V 3A, AC 380V 3A resistive | | |
| Operation mode | Panel operation | | |
| Function | Phase loss, three-phase current imbalance, overload, locked rotor, short circuit,underload, overvoltage, undervoltage, grounding, start avoidance | | |
| Start avoidance | Adjustable from 0 to 99 s | | During the start avoidance time, it only provides protection against phase loss, locked rotor, imbalance, over - voltage and under - voltage, short - circuit, grounding, and under - load. During the start avoidance time, the overload time is not |
| Overload inverse time limit | The tripping level can be selected from 0, 1, 2, 3, 4, 5, 6, 7, 8 (see Table 3 for characteristics). 0 is a definite time limit (the time can be set). | | Counted |
| Timing time | The operating current is more than 1 times the setting current | | setting range0~99s，default |
| Locked rotor | When the operating current is more than 1 - time the setting current, the operating current reaches the setting current (3.0 - 9.9 times). | Action time ≤6S | |
| Short circuit | The operating current reaches 10 times the set current or more | Operating time ≤2S | |



Table 2 (Continued)

| Name | Description | | Remarks |
|---|---|---|---|
| Phase loss | When the current of any one of the three-phase currents is zero | Operating time ≤ 6s | |
| Three-phase current imbalance | When the difference value between the currents of any two phases reaches the unbalance setting value (0 - 99% is settable),0 means to disable this function. | Operating time ≦ 10s | Difference value between two phases: (Imax - Imin)Imax×100% Imax: Current maximum current value; Imin: Current minimum current value |
| Overvoltage | The measured voltage exceeds the set value (AC100V - AC500V is settable) | Operating time ≦ 10s | Acceptable voltage: 120% |
| Undervoltage | Measured voltage is less than the set value (0~AC400V is settable). "0" means to disable this function. | Operating time ≤ 20 s | Available voltage: 80% |
| Grounding | The grounding current value reaches the set values 0, 1, 2, 3, 4, 5, 6, 7, 8, 9 (see Table 4 for the set value serial numbers). 0 means to disable this function. | Delay ≤2s, operation time ≤0.2s | When using the grounding function, a special zero - sequence mutual inductor for this product needs to be purchased separately |
| Underload | When the actual current is 0 - 99% (configurable) less than the set current Set to 0 to disable this function | Time is configurable | Setting current × underload rate |
| Fault record | Record and latch the fault type | | Unaffected by power outage (record the last ten fault) |
| Optional function | 4mA~20mA transmission output, RS485 communication | | Please indicate this function when placing an order |



Table 3

| Anti - time curve serial number | Operating time | | | | | | | | |
|---|---|---|---|---|---|---|---|---|---|
| | 1.05 times | 1.2 times | 1.5 times | 2 times | 3 times | 4 times | 5 times | 6 times | 7.2 times |
| 1 | No tripping within 2 hours | ≤51s | ≤25s | ≤13s | ≤7s | ≤5s | ≤4s | ≤3.7s | ≤3.3s |
| 2（10A） | | ≤122s | ≤58s | ≤29s | ≤13s | ≤8s | ≤6.2s | ≤5.2s | ≤3.8s |
| 3 | | ≤241s | ≤114s | ≤56s | ≤24s | ≤14s | ≤9.8s | ≤7.7s | ≤6.1s |
| 4 | | ≤358s | ≤170s | ≤82s | ≤35s | ≤20s | ≤13.4s | ≤10s | ≤7.8s |
| 5 | | ≤480s | ≤224s | ≤109s | ≤45s | ≤26s | ≤17s | ≤12.6s | ≤9.5s |
| 6 | | ≤607s | ≤282s | ≤135s | ≤56s | ≤31s | ≤20.7s | ≤15s | ≤11.4s |
| 7 | | ≤725s | ≤338s | ≤162s | ≤67s | ≤37s | ≤24.2s | ≤17.6s | ≤13s |
| 8 | | ≤852s | ≤395s | ≤188s | ≤78s | ≤43s | ≤27.8s | ≤20.2s | ≤14.6s |

Table 4

| Set value serial number | 0 | 1 | 2 | 3 | 4 | 5 | 6 | 7 | 8 | 9 |
|---|---|---|---|---|---|---|---|---|---|---|
| ≧Ground current value (mA) | Shielding function | 30 | 50 | 100 | 150 | 200 | 250 | 300 | 350 | 400 |



## V. Current Output Formula (4mA - 20mA)

$$I_o = \frac{I_{max}}{I_r} \times 16 + 4$$

$I_o$ : Output current of $4mA \sim 20mA$

$I_{max}$:Three - phase sampling maximum current

$I_r$ : Setting current

## VI. Main Performance Parameters

1.Main Circuit: Rated insulation voltage Ui : AC400V, rated frequency 50Hz. Rated impulse withstand voltage Uimp4kV.

2. Auxiliary Circuit: Rated insulation voltage Ui : AC400V, rated frequency 50Hz. Usage category AC - 15, Ue /Ie ： AC380V/3A, AC220V/3A. Rated restricted short - circuit current matching SCPD model: RT28 - 32, fuse core: 6A.

## VII. Main Functions

1. Protection function: Fault protection against overload, locked-rotor, three-phase current imbalance, phase loss, overvoltage, undervoltage, grounding, underload, short circuit, etc.

2. Setting function: Rated current, undervoltage value, overvoltage value, tripping level code, starting avoidance time, three-phase current imbalance rate, locked-rotor current multiplier, grounding current value, reset mode code, current transformer transformation ratio coefficient value (only valid for HHD1B - 3, HHD1B - 4), percentage of underload current to set current, underload action time, communication address number, etc. can be set.

3. Display function: When powered on, it shows the standby state; during the detection state, it displays the current values, voltage values, and grounding values of the three phases A, B, and C; during the protection state, it memorizes and displays overcurrent, overvoltage, undervoltage, grounding values, etc., and latches various fault categories and fault indicators; during the setting state, it displays each character and the set values. It automatically fades out after three minutes of standby.

4. Communication function: It has a 4mA - 20mA current output interface and an RS485 communication interface (supporting the Modbus - RTU communication protocol) to realize digital information transmission. One host computer (PC) can support the installation of up to 255 monitors at most and can set parameters for each motor, facilitating automated management.

5. Fault indication: When the protector detects a motor fault, the digital tube displays the corresponding fault name. After the action, it displays the corresponding motor fault value, and the running display characters go out.

## VIII. Panel Operation and Display

1. Reset key: Press the reset key in the setting state to exit the setting state;

press this key to reset the protector after a protection action.

2. Setting key: Press this key in the standby state to enter the setting state and confirm the set value.

3. Shift, Data: In the setting state, press this key to select the setting item or increase/decrease the parameter Press and hold for 2s continuously, the numbers will add / subtract quickly; in operation or fault state, press "Shift" and "Data" keys to check three - phase currents of phase A, phase B and phase C (characters of phase A, phase B and phase C are always on), grounding current ("phase A" character flashes), voltage value (over - undervoltage input terminal,the character "Phase B"flashes).



## IX. Introduction to Setting Items

Table 5

| Menu | Display Content | Code Definition | Setting range and remarks |
|---|---|---|---|
| 1.SEr (Parametersettingmenu) Pressthe "Settings"keyto enterthesub-menu | A 100 | Rated current value | he setting should be within the protection value specification range. |
| | U 456 | Overvoltage value | Set at about 120% of the rated voltage. |
| | u 000 | Undervoltage value | Factory default is 0, 0 means to disable this function. |
| | S - - 1 | Overload inverse-time protection action code | Setting range 0 - 8, see Table 3 |
| | c - 05 | Timing time | Setting range 0 - 99s, default 5s |
| | t - 10 | Starting avoidance time | Setting range 0 - 99s, default 10s |
| | d - 6.5 | Locked-rotormultiple | Setting range 3.0 - 9.9, default 6.5 times |
| | I - 50 | Three-phase current unbalanc epercentage value | Setting range 0 - 99%, default 50% |
| | L - - 5 | Code for ground current value | Setting range 0 - 9, default 0, see Table 4 |
| | F 001 | Change coefficient value of current transformer | Setting range 1 - 200[a] |
| | E - 50 | Under-load current percentage value | Setting range 0 - 99%, default 10% |
| | r - 20 | Under-load current protection time | Setting range 0 - 99s, default 10S |
| | 4n - 0 | 4 - 20mA transmission output | Setting range 0 - 3: 0 for maximum phase current, 1 for phase A current, 2 for phase B current, 3 for phase C current default 0 |
| | h - - 0 | Reset mode code | 0 for manual, 1 for automatic, default 0 |
| | L - 10 | Automatic reset time | Setting range 0 - 99s, default 10s |
| | r 001 | Communication address number | Setting range 0 - 255 |
| | b - - 1 | Communication baud rate | Setting range 0 - 3 (default 1[b] ) |



Table 5 (continued)

| Menu | Display content | Code definition | Setting Range and Remarks |
|---|---|---|---|
| | J - - 1 | Communication verification method | Setting range 0 - 2 (default 2[c]) |
| 2.8UG (Faultquerymenu)Pressthe"Settings"key to enter | 1CUr | Current fault(n.ULmeansnofault) | Press the"Settings"key to light up the corresponding fault characters |
| | 2PrE | Historical faults | Press the"Settings"key to query the lastten fault records |
| | 3CLr | Clear all faultr ecords | Press the"Settings"key to clear all fault records |

Note: a. When setting the "current transformer transformation ratio coefficient value", it is only valid for HHD1B - 3 and HHD1B - 4 specifications, and invalid for other specifications. For example, for a current transformer with a ratio of (400:5), set the value "F" to 80. After setting, press the reset key to return to the " 2PrE "state.

b. When setting the "communication baud rate", "0" represents 19200; "1" represents 9600; "2" represents 4800; "3" represents 2400.

c. When setting the "communication verification mode", "0" represents no verification; "1" represents odd verification; "2" represents even verification.

## X. Brief Introduction to Setting Process

Taking the "Avoidance Time" in the parameter - setting menu with a time of 15s as an example:

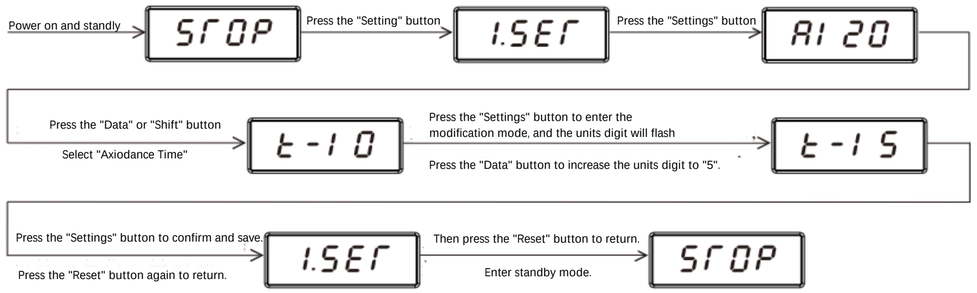




## XI. Wiring Diagram

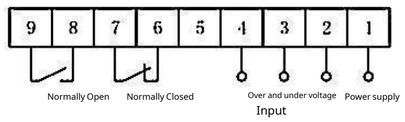


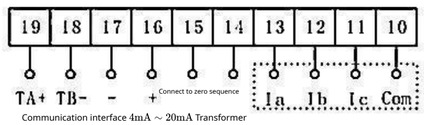


Note: ① When used in a split - type, aviation plugs are used, and there is no need to connect wires to the mutual inductor at the dotted line.

② When there is no input (floating) at the over - undervoltage input port voltage, the undervoltage value should be set to 0.

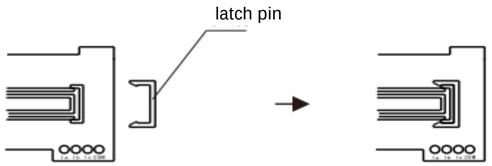


HHD1B split combination into a whole: Insert the display part into the card slot of the current transformer, and insert the two latches (at A and B) on both sides to combine the protector into one. The display part and the current transformer part are combined into a whole; Pull out the latches on both sides, and pull up the display part to separate it from the current transformer part into a split type.

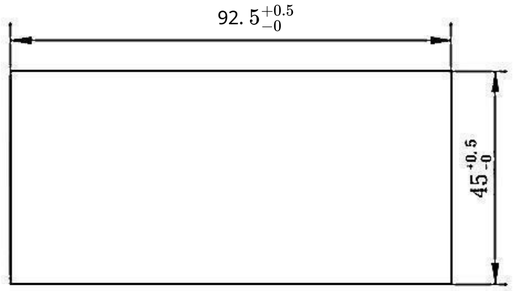


Cut-out dimensions

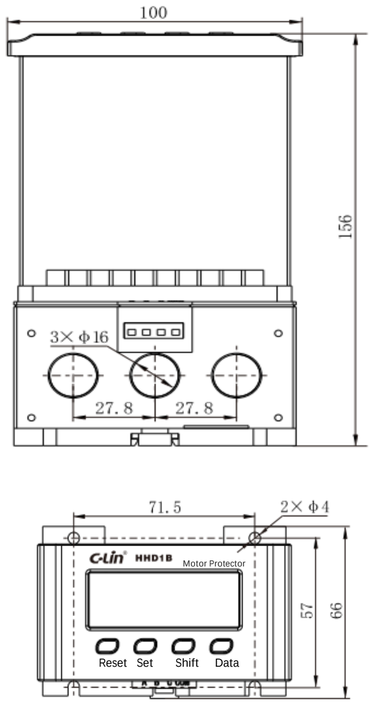


Overall of HHD1B-1, 3, 4

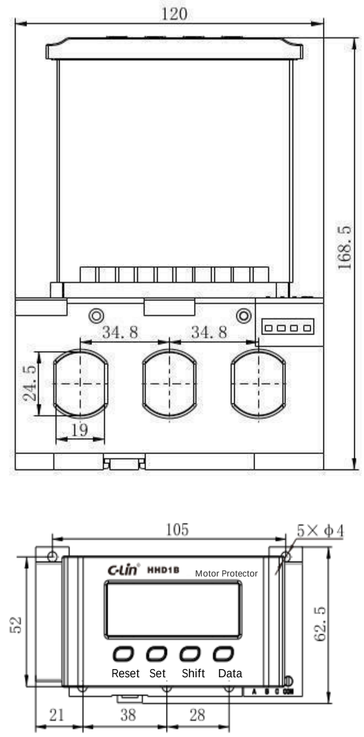


Overall of HHD1B-2



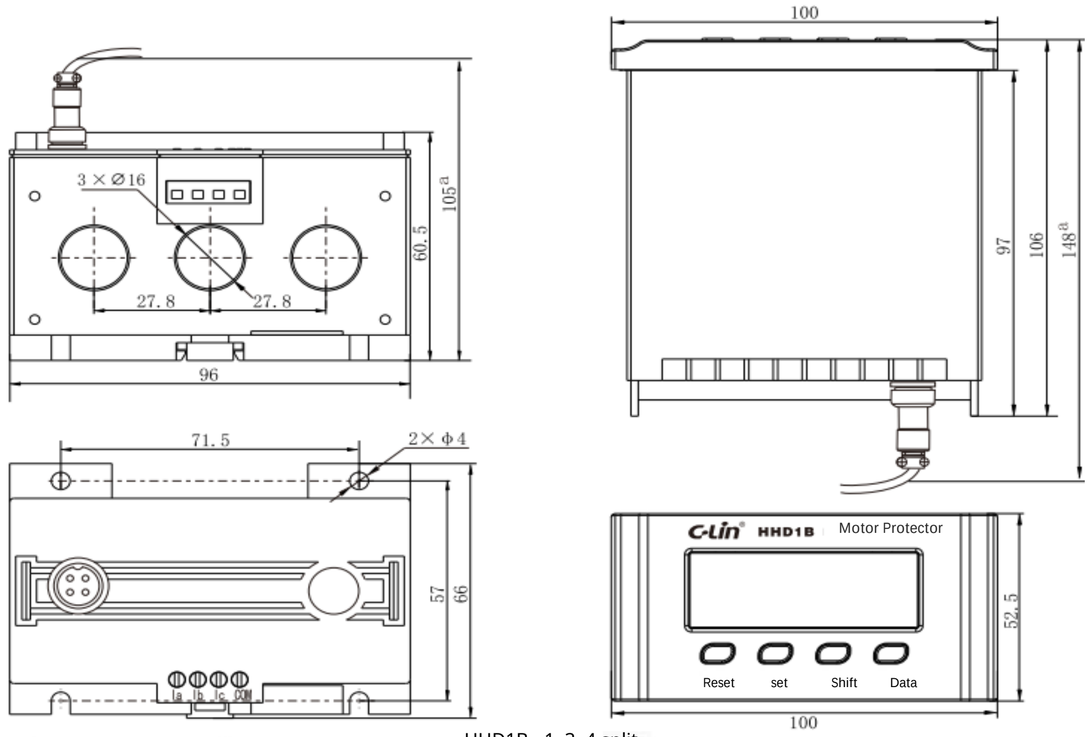


HHD1B - 1, 3, 4 split

a: There may be errors in the dimensions due to line - fold measurement.



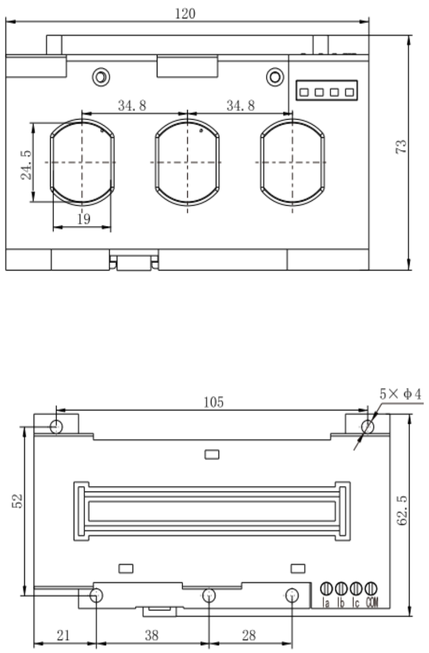


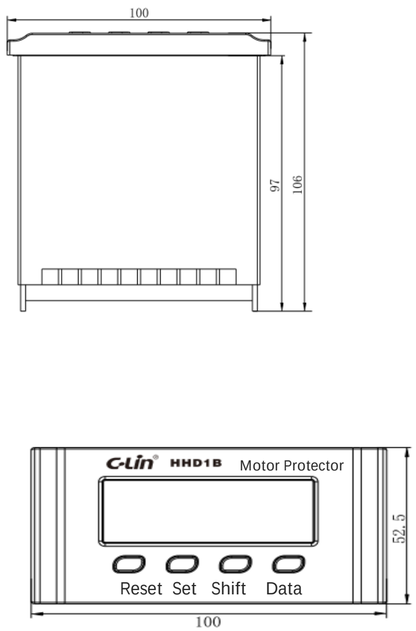


HHD1B-2 Split



## 13. Computer Remote Communication System of HHD1B Protector

Table 6

| | |
|---|---|
| Schematic Diagram | 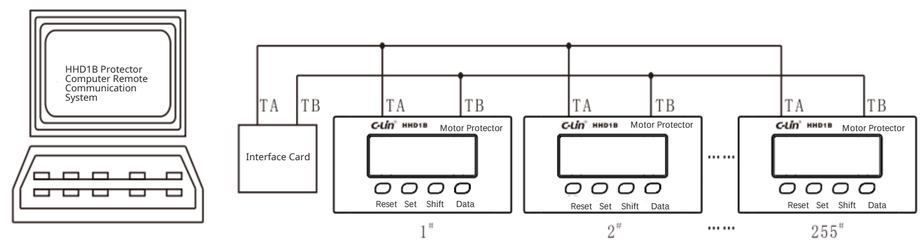  |
| Main Functions | 1. It uses an RS485 serial digital interface, and the communication distance is ≤ 1200 meter(convert RS485 to RS232 interface through the interface card).<br>2. Each host computer (PC) can communicate with up to 255 protectors.<br>3. The protection parameters of each motor can be modified.<br>4. The current, voltage, operating status, and faults of each motor can be detected. |

Note: A communication protocol manual (attached separately) is provided for customers' installation and operation.

## XIV. Wiring Methods

1. Primary wiring

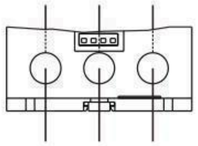

Schematic diagram of single core-penetrating for specifications below 200A

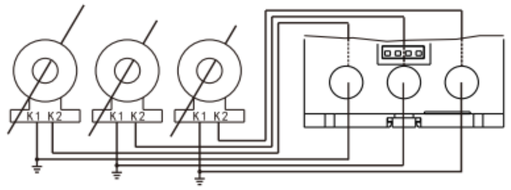


When the protectors of HHD1B - 3 and 4 specifications are used with current transformers having transformation ratios of 400:5 and 800:5, the lead - out wires of the transformers need to directly pass through, as shown in the above figure.

Note: For the HHD1B - 1 specification, when the protector protects a motor with a power less than 1KW, the main circuit needs to be wound with turns to make the rated current greater than 2A (the number of turns is calculated according to the current).

2. Secondary wiring

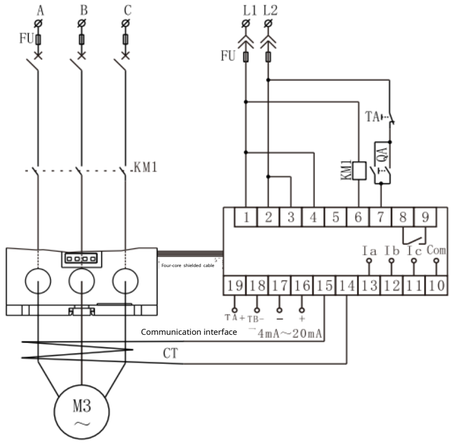


Typical application examples of HHD1B-1 and 2 specifications



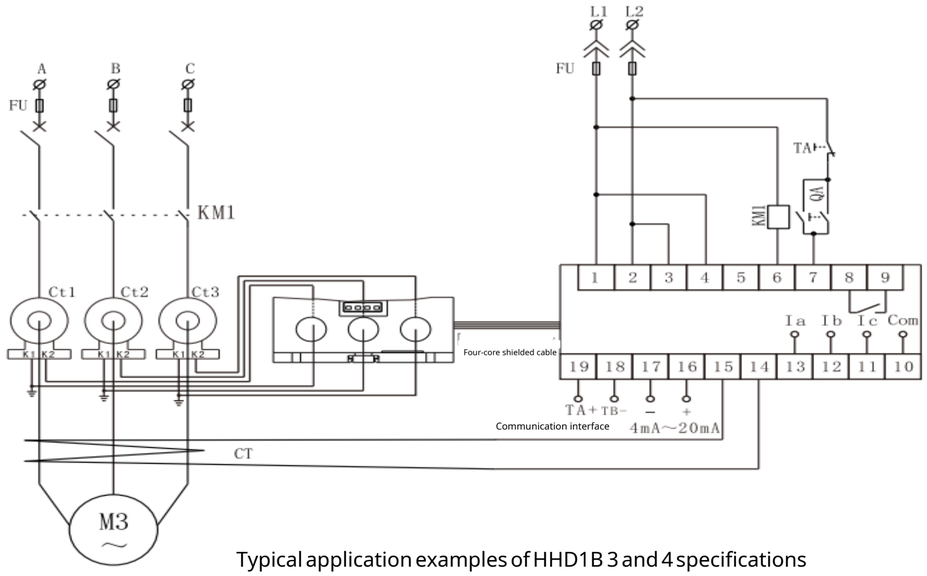


Typical application examples of HHD1B 3 and 4 specifications

Explanation:

Main circuit: A, B, C: Three - phase live wires  Control circuit: L1, L2:Power input  FU: Fuse
KM1: AC contactor  QA: Start button  CT: Zero - sequence current transformer (special transformer)
TA: Stop button  Ct1, Ct2, Ct3: Current transformers  Four - core shielded wire
Communication interface 4mA - 20mA



## XV. Precautions

1.According to the rated current value of the motor, select the protector with the corresponding current specification. It should not be lower than the lower limit of the current specification or higher than the upper limit. It is recommended to choose as close to the middle as possible.

2.When installing and wiring the protector, it should be correctly connected according to the purpose of each wiring terminal of the actual product.

3.For the working power supply of the protector, pay attention that the nominal voltage should match the actual voltage.

## XVI. Ordering Information

1. When selecting a protector, specify the model, quantity, power supply voltage, and structural form (integral or split).

2. When selecting the split structure, the length of the connection line between the upper and lower bodies of the protector needs to be indicated. The default length at the factory is 2m.

3.When the customer needs the grounding protection function, they need to purchase the special zero - sequence current transformer for this product separately (the zero - sequence current transformer is available in four aperture sizes: Φ25mm, Φ45mm, Φ75mm, Φ100mm).

Example:

a) HHD1B - 1Z, 2A - 100A, AC380V, 10 units, indicating a protector with model HHD1B - 1Z, current specification 2A - 100A, integral structure, power supply AC380V, and quantity 10 units.

b) HHD1B - 2F, 40A - 200A, AC380V, 10 units, indicating a protector with model HHD1B - 2F, current specification 40A - 200A, split structure (the connection line between the upper and lower bodies is 2m), power supply AC380V, and quantity 10units.

c) If RS485 communication function and 4mA - 20mA transmission output function are required, it should be indicated in the order. These functions are not available in conventional products.