1.When it is a single - phase load: If the resistive current of the load≦3A or the inductive current ≦0.5A, the relay controls directly, and the wiring refers to Example 1; If the resistive current of the load > 3A or the inductive current > 0.5A, the relay expands the capacity through an AC contactor, and the wiring refers to Example 2; For a three - phase load, when the power supply of the AC contactor and the relay is AC380V, the wiring refers to Example 3; When the power supply of the AC contactor and the relay is AC220V, the wiring refers to Example 4.
2.The function of the example relay is as follows: When the power supply is connected, the load or KM (AC contactor) is energized. After a delay to the preset value, the load or KM (AC contactor) is de - energized.
Note 1: The load can be a street lamp or a bulb, and can be directly connected to the two wires at the socket of the street lamp or bulb (as shown in Example 1).
Note 2: KM is the coil of the AC contactor, and both ends A1 and A2 can be wired according to Example 2, Example 3, and Example 4.
Note 3: The working power supply of the relay and KM in Example 3 is both AC380V. Pay attention to the voltage level of the selected product.

X. Ordering Information

It is necessary to specify the product model, voltage level, and quantity. If there are special requirements, they should be specified separately.
For example: HHS6D/M AC220V, 100 pieces.

I. Overview

The HHS6D/M multi - loop time relay (hereinafter referred to as the relay) contains four-channel timers and can be widely used in fields such as packaging, printing, pharmaceutical, food, textile, papermaking, ceramics, petroleum, chemical, metallurgy, etc. to replace PLC as a delay component in industrial control circuits. It features multiple settable working modes, a wide delay range, advanced technology, high technical content, strong anti - interference ability, and high timing accuracy.This relay complies with the relevant requirements of GB/T 14048.5.

II. Main Data Parameters

1.Working power supply (control power supply voltage): AC220V 50Hz, allowable voltage fluctuation range (85% - 110%) Ue.
2.Working mode:"0" indicates power - on delay (only 1 time segment T1);
"1" indicates release delay (only 1 time segment T1);
"2" indicates infinite cycle delay with prior action (2 time segments T1, T2);
"3" indicates infinite cycle delay with prior inaction (2 time segments T1, T2);
"4" indicates finite cycle delay with prior action (2 time segments T1, T2);
"5" indicates finite cycle delay with prior inaction (2 time segments T1, T2).
3.Delay range: 0.01s - 9999h.
4.Cycle times: 1 - 9999 times.
5.Adjustable time base: 0 represents 0.01s, 1 represents 0.1s, 2 represents 1s, 3 represents 1m, 4 represents 1h.
6.Working starting point:" 0 " represents the reset moment;
" n " represents the moment when the T1 time segment of the nth (n = 1～3) channel finishes the first timing;

IX. Application Circuit Examples (Taking Setting Release Delay as an Example)

Example 1:

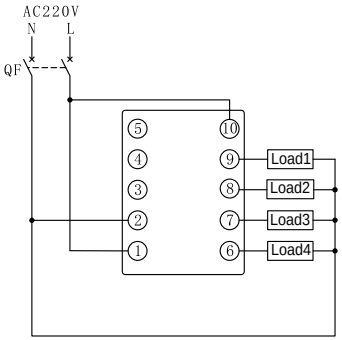

Example 2:

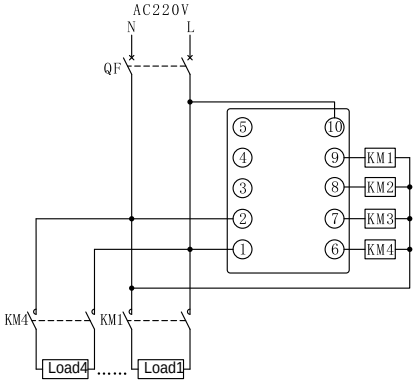

IV. Panel Description

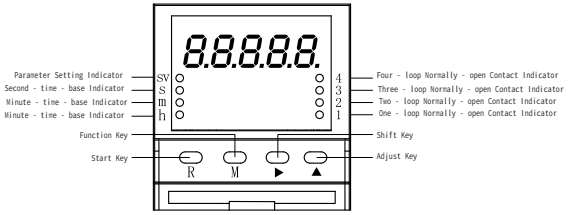

Function Key (M): Save parameters and return to the timing interface
Start Key (R): Enter the parameter setting interface
Shift Key (▶): Move the position of the flashing digit
Adjust Key (▲): a) Adjust the flashing digit in an incrementing way; b) View the timing time of each loop

V. Wiring Diagram

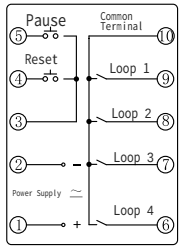

"n" indicates the moment when the first timing of the T2 time segment of the nth (n = 1 ~ 3) loop is completed.

7. Contact quantity: Four groups of normally open contacts.
8. Contact capacity: 3A AC250V (resistive) for a single loop; the total capacity is not more than 10A AC250V (resistive).
9. Ambient temperature: -5°C ~ 40°C.
10. Altitude: Not exceeding 2000m.
11. Humidity: When the maximum temperature at the installation site is 40°C, the relative humidity of the air does not exceed 50%. At lower temperatures, a higher relative humidity is allowed, for example, 90% at 20°C. Special measures should be taken for condensation occasionally generated due to temperature changes.12. Pollution level: Level 3.
13. Installation method: Panel - mounted.
14. Conventional heating current Ith: 5A.
15. Rated insulation voltage Ui: 400V.
16. Rated impulse withstand voltage Uimp: 2.5KV.

III. Outline and Installation Dimension Drawing (mm) (Drawings remain as in the original, with the text descriptions translated)

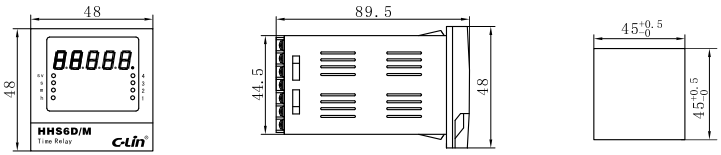

Example 3：

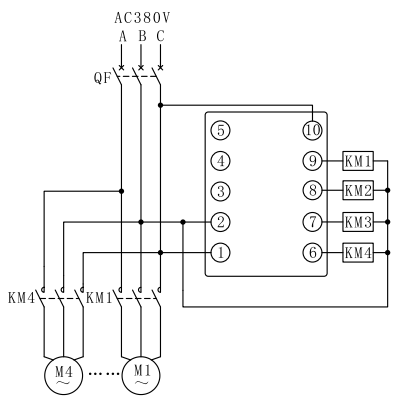

Example 4：

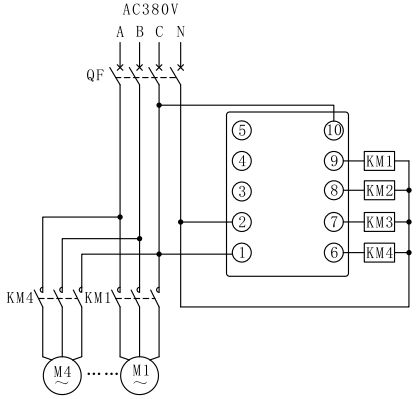

VI. Working Sequence Diagrams

Since the working circuit, working mode, and working starting point of this product can all be arbitrarily set, while those of the L and P modes are fixed, this instruction manual only uses the working sequence diagrams of the L and P modes as examples for illustration.

L-Mode Sequence Diagram

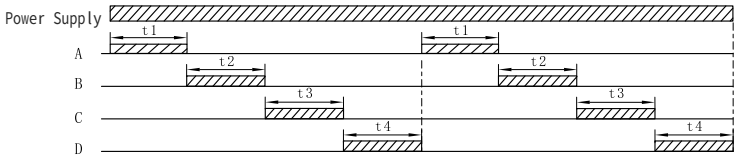

P-Mode Sequence Diagram

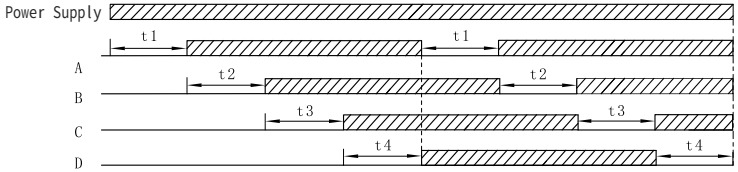

Continued from previous page

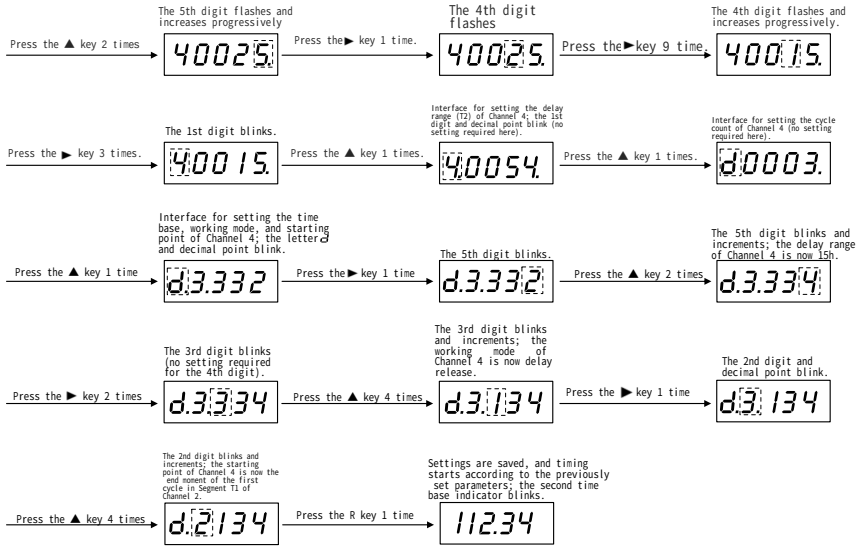

Continued from the previous page

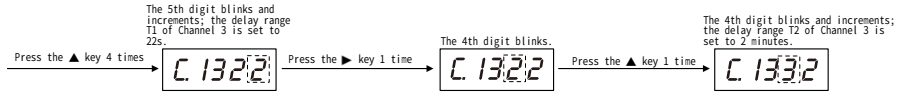

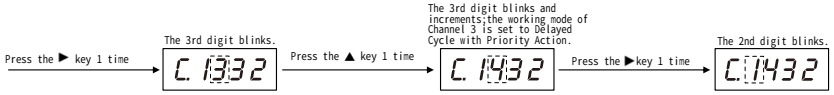

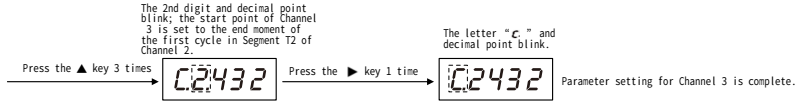

(5) Setting Delay Range, Cycle Count, Time Base, Mode, and Start Point for Channel 4

VII.Usage Instructions

(1) Function Description

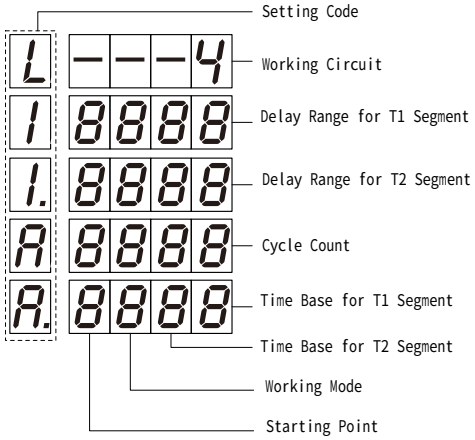

Continued from the previous page

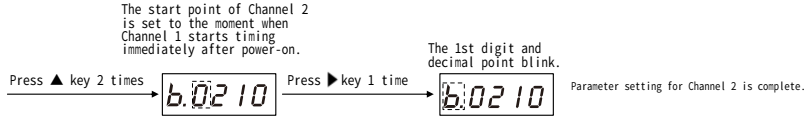

(4) Setting Delay Range, Cycle Count, Time Base, Working Mode, & Start Point for Channel 3

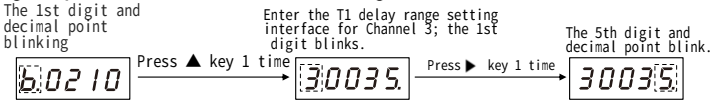

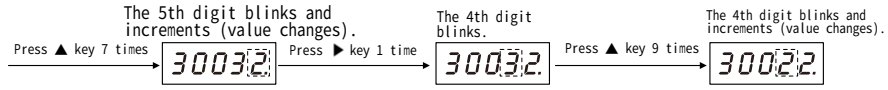

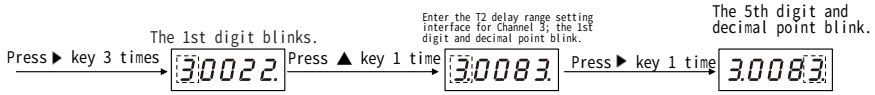

When operating in cycle mode, the start point of Channel 4 cannot be set to "2." or "3.". Therefore, after configuring the start points for all channels, if the working mode of a preceding channel is modified, recheck the start points of all channels.

(3) Parameter Setting

After power - on, the relay starts timing according to the parameters set last time, and the corresponding time base indicator flashes. The indicators 1, 2, 3, and 4 on the panel correspond to the working states of the four - way relays respectively. When the relay is attracted, the indicator is on; when the relay is released, the indicator is off. At any time after power - on, press the M key for 3 seconds to enter the loop setting interface, and the sv (parameter setting) indicator is on. Press the ▲ key to set the required loop, and then press the ▶ key once to enter the delay range setting interface of the T1 time period of the 1st loop. Combine the ▲ key and the ▶key to set the delay range, working mode, cycle times, working start point, and time base of the T1 time period of the 1st loop (see the function description in Article 7). Set the delay range, working mode, cycle times, working start point, and time base of the required loops one by one according to the setting method of the 1st loop.The delay range, working mode, time base, and start point of each - way timer are independent of each other. After the relay starts, the corresponding time base indicator flashes. In L and P modes, the digital tube displays the timing state of the current loop; in other modes, the digital tube automatically switches loops every 10s and cyclically displays the timing time of the next loop. Press the ▲ key to quickly query the timing time of the next loop. After the operation is completed, the digital tube displays "End".

The terminal block has reset and pause terminal terminals. When the reset terminal is connected, all timing values are cleared to zero, and it starts timing from 0 immediately after being released; when the pause terminal is connected, all timing stops, and continues timing after being released.

VIII. Application Example

The working requirements of a certain control cabinet are as follows: The 1st set of equipment is powered on but does not work first, and starts to work after a delay of 12.34s.

(2) Explanation of Working Start Points (Taking the working mode of each circuit as an example of one cycle of prior action)

The first circuit always starts running and timing when powered on or reset.
The second circuit, in addition to having the same start point as the first circuit, can also start running and timing at the moment when the T1 or T2 of the first circuit is completed for the first time.
The third circuit, in addition to having the same start point as the second circuit, can also start running and timing at the moment when the T1 or T2 of the second circuit is completed for the first time.
The fourth circuit, in addition to having the same start point as the third circuit, can also start running and timing at the moment when the T1 or T2 of the third circuit is completed for the first time.

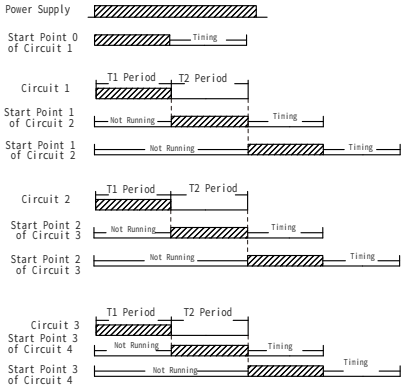

Note: Different working modes mean different actually selectable start points. If the working mode of the first circuit is 0 (power - on delay), since there is only "1" (T1 period) and no "1." (T2 period) in power - on delay, then when setting the start points of other circuits, it is impossible to select "1."; similarly, if the second and third circuits do not work

Continued from previous page

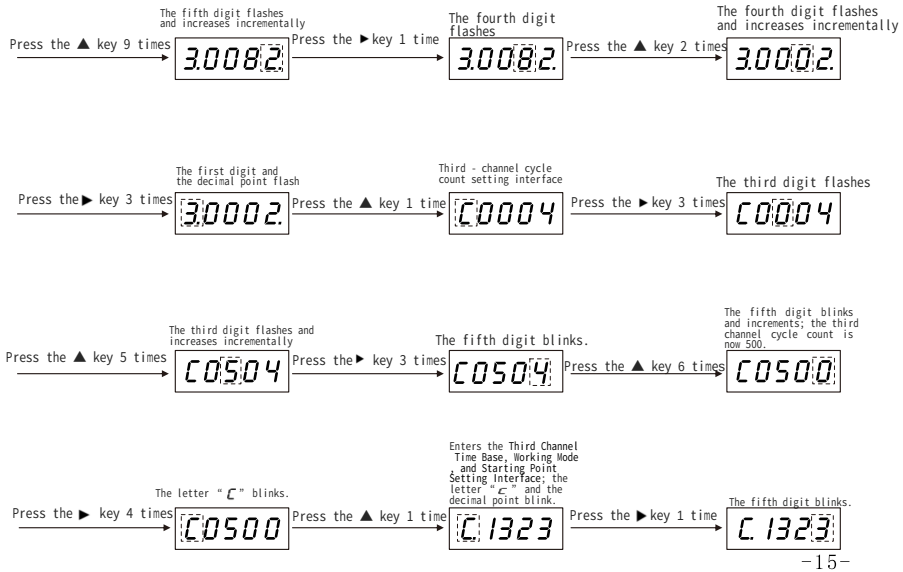

Then it starts to work. The second set of equipment starts working immediately upon power - on, stops after 56.78s, and then starts working again after a delay of 678.9s, and this cycles infinitely. The third set of equipment does not work first upon power - on. It starts working immediately when the second set of equipment starts working for the second time, stops after 22s, and then starts working again after a delay of 2 minutes, and this stops after cycling 500 times. The fourth set of equipment does not work first upon power - on. It starts working immediately after the first work of the second set of equipment ends, and stops after a delay of 15 hours.

For the first circuit (the first set of equipment): The working mode is power - on delay (0), the working time base is 0.01s (0), and the working start point is to start running immediately upon power - on (0).

For the second circuit (the second set of equipment): The working mode is infinite cycle delay with prior action (2), the working time base T1 is 0.01s (0), T2 is 0.1s (1), and the working start point is to start running immediately upon power - on (0).

For the third circuit (the third set of equipment): The working mode is limited cycle delay with prior action (4), the working time base T1 is 1s (2), T2 is 1 minute (3), the number of cycles is 500 times, and the working start point is to start running after the first operation of the T2 time period of the second circuit is completed (2).

For the fourth circuit (the fourth set of equipment): The working mode is release delay (1), the working time base is 1 hour (4), and the working start point is to start running after the first operation of the T1 time period of the second circuit is completed (2).

Continued from the previous page

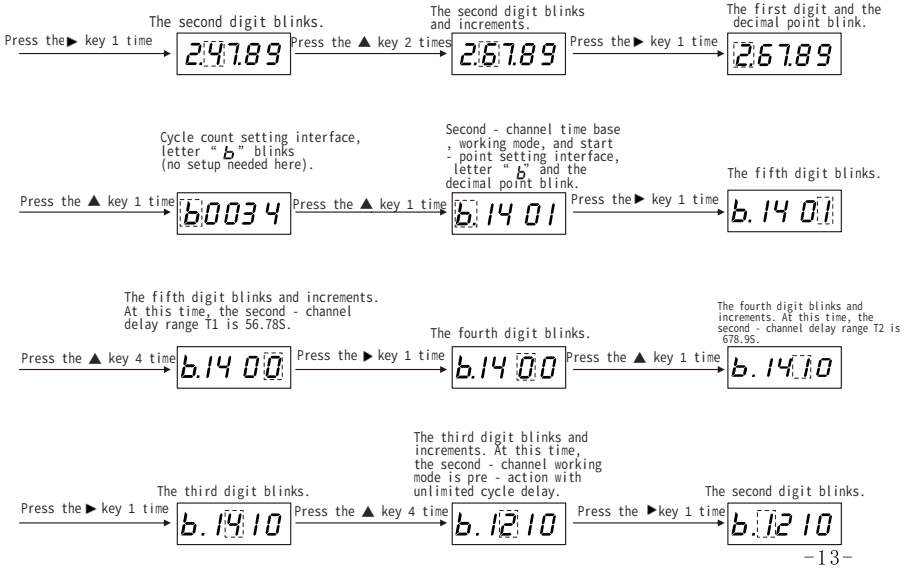

Continued from the previous page

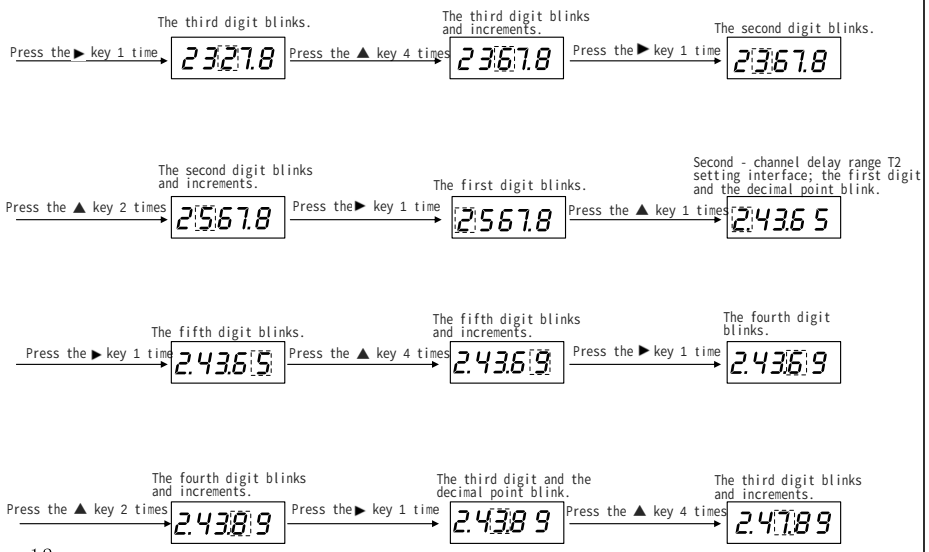

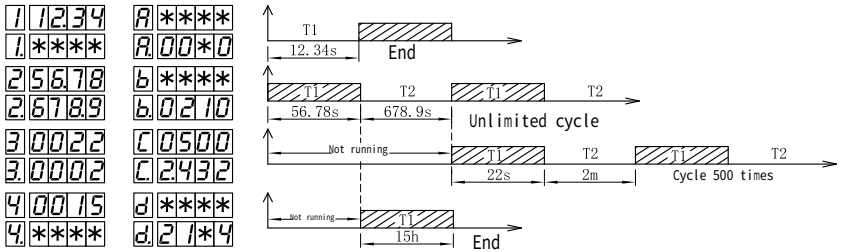

Note: Items marked with " * " do not need parameter setting in this example and display the last set value.

(1) Set the number of loops. Taking the last set number of loops as 1 and needing to set 4 loops as an example.

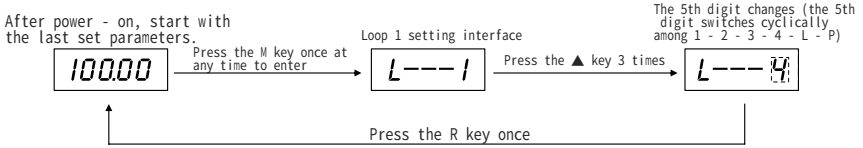

(2) Set the delay range, cycle times, time base, working mode, and working start point of the first loop

产品合格证

产品合格证

符合标准: GB/T 14048.5

检 验 员: 检01

出厂日期: 见产品或包装

本产品经检验合格, 准予出厂。

C-Lin 欣灵电气股份有限公司 XINLING ELECTRICAL CO.,LTD.

C-Lin®
欣灵电气股份有限公司
XINLING ELECTRICAL CO.,LTD.
地址: 浙江省乐清经济开发区纬十九路328号
电话: 0577-6273 5555 传真: 0577-6272 2963
官网: www.c-lin.cn E-mail: xl@xinling.com
技术咨询: 400-8236-775

RECYCLABLE

国家高新技术企业 浙江省知名商号

C-Lin 欣灵

使用说明书
Products Instructions

HHS6D/M

Multi - loop Time Relay

Thank you very much for using the C-Lin brand Time Relay.
Please read the instruction manual before using the product!

01A079P0

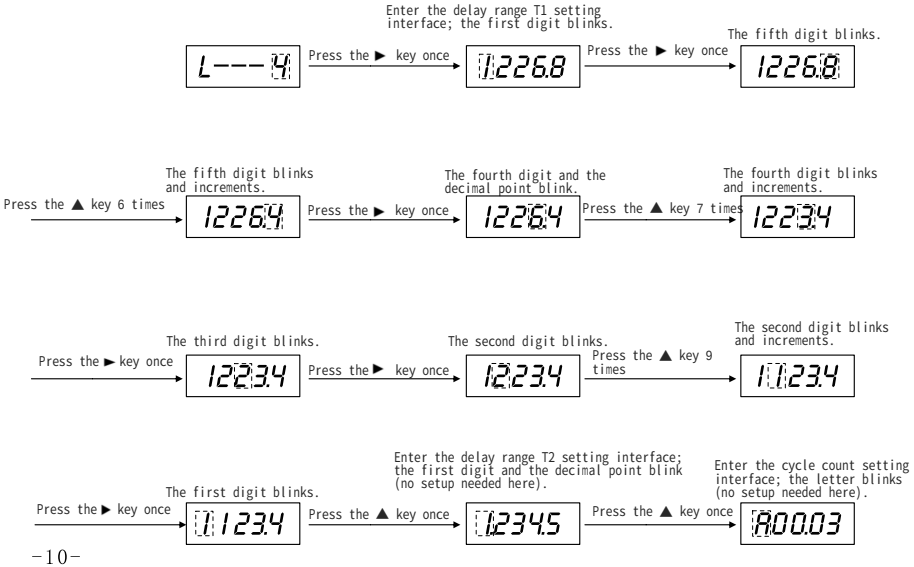

Continued from the previous page

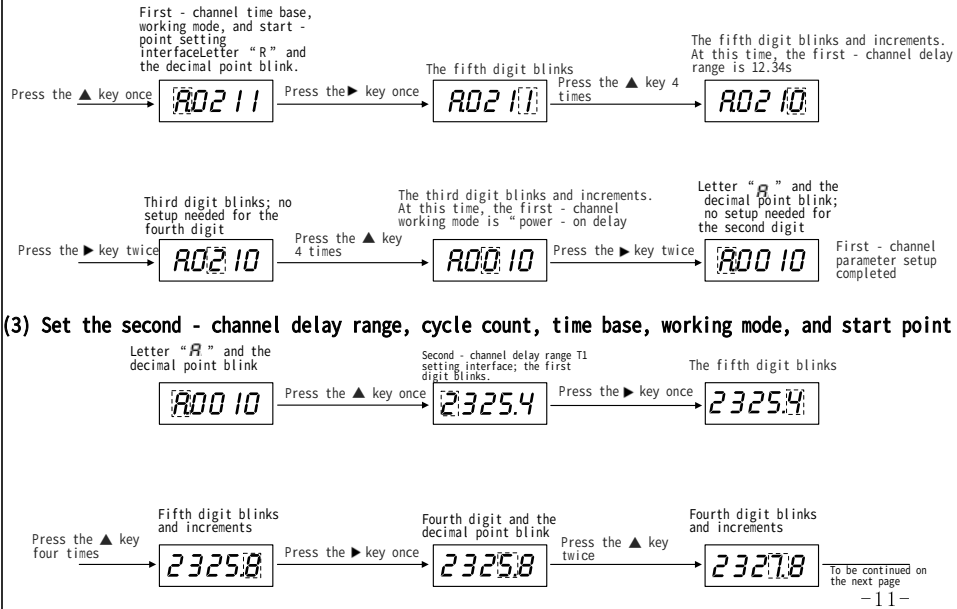

(3) Set the second - channel delay range, cycle count, time base, working mode, and start point

To be continued on the next page