C-Lin 欣灵 ISO9001 Quality Management System Certified Enterprise

HHT4 Three-phase Power Regulator

Instruction Manual

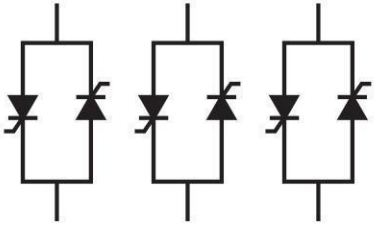

SCR POWER

Green, Energy-saving and Environmentally Friendly……

Foreword

First of all, thank you for choosing our company's power regulator. This regulator is a power controller based on thyristor modules and with intelligent control circuits as the core, also known as a thyristor power regulator. The basic principle is that the DC signal output by the instrument is converted into a digital synchronous trigger signal to trigger the thyristor, and the conduction angle of the thyristor is changed to regulate voltage and power, thereby achieving precise temperature control. It is widely used in heating industries such as industrial electric furnaces, glass melting furnaces, ovens, and petrochemical industry. To ensure the correct installation and operation of this controller, please read this manual before use.

I.Product Features

●It has a variety of control input signals (4~20mA/0~5V/0~10V/1~5V/2~10V, etc.) that can be switched and selected by itself;

●It has manual adjustment of internal output power and manual adjustment + automatic adjustment of external output power;

●It has fuse open indicator light/load short circuit, open circuit indicator light (optional)/SCR over-temperature (75℃) indicator light and abnormal alarm contact;

●It has a load output power display percentage of 0~100%;

●It has load buffer heating time (about 15 seconds);

●When SCR is over-temperature or FUSE is blown, the output will be stopped immediately; when the power is restored after the fault is eliminated, the buffer output will be performed again;

●Equipped with ultra-fast fuses to protect SCR from damage (and the fuses are easy to assemble and disassemble);

●Ultra-high efficiency heat sink with fast thermal conductivity and good heat dissipation;

●Power frequency self-detection, can be used at 50~60Hz without any selection or switching;

II.Models of Power Regulators and Their Meanings

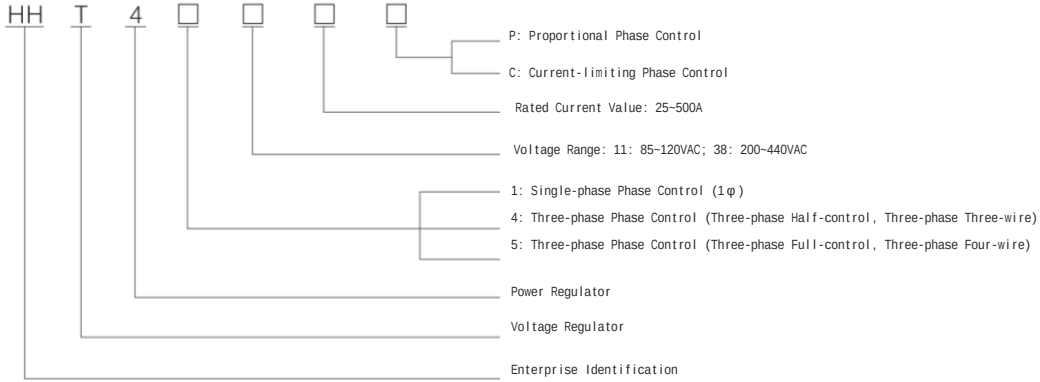

III.Technical Parameters

●Applicable Voltage:Type 11: Three-phase voltage AC85~120V —— 50/60Hz.
Type 38: Three-phase voltage AC200~480V —— 50/60Hz.

●Load Current: 25A/40A/75A/100A/125A/150A/200A/250A/300A/400A/500A.

●Auxiliary Power Supply:Working power supply for PCB (Printed Circuit Board): AC220V ±10% 50/60Hz; there is no distinction between neutral wire and live wire at control terminal L/N. Neutral wire N is required for three-phase four-wire synchronization. If the internal PCB is connected to the main control power supply, no auxiliary power supply is needed.

●Phase shift angle: 0~150° for delta load or star load (HHT4 - 4) (neutral point not connected to neutral wire); 0~175° for star load (HHT4 - 5 type) (neutral po int can be connected to neutral wire).

- Over-temperature Alarm: The product alarms when the temperature exceeds 75℃.
- Input Signals: 4 - 20mA, 0 - 10V and other signals.
- Operating Environment: Temperature -10 - 55℃, humidity below 90% RH.
- Withstand Voltage Strength: AC2000V for 1 minute (between the power terminal and the heat sink).
- Insulation Resistance: Above 20MΩ at 500V (between the power terminal and the heat sink).
- Output Waveform Diagram

Output / Control mode	Output wave		
	10%Output	50%Output	90%Output
Phase angle control	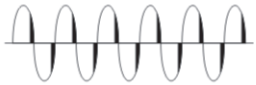		

- Phase angle control: It is continuous phase-crossing control, with stable output and no ammeter fluctuation. However, harmonics will be generated every half-wave cycle.
- Applicable loads:Three-phase three-wire half-controlled type: Fixed-impedance loads, such as far-infrared, IR lamp tubes, etc. Transformer loads and three-phase loads must be balanced. Three-phase four-wire fully-controlled type: Variable-impedance loads, such as silicon carbide rods, silicon molybdenum rods and other heating loads. It can also be used for speed regulation of fans, water pumps and torque motors, etc.

Ⅳ.Appearance and Installation Dimensions

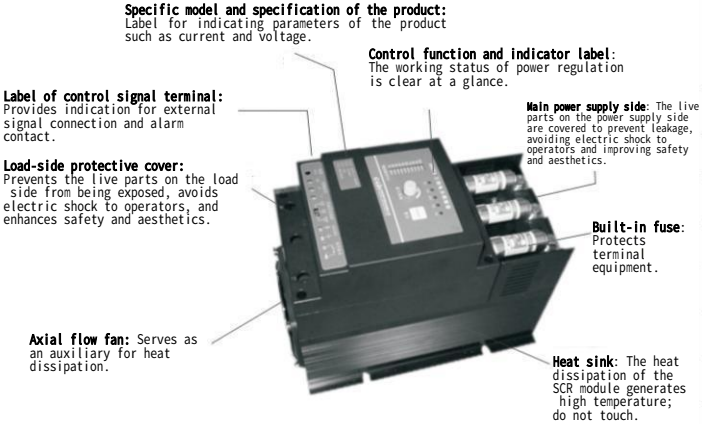

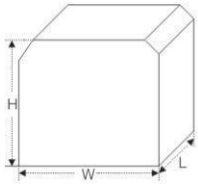

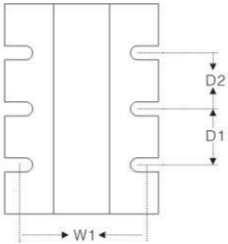

※ Unit :mm

Current A	Overall Dimensions L	W	H	Mounting Dimensions D1	D2	W1	Screw	Cooling Method	Product Diagram
25	150	130	164	80	0	116	M5.M6	Self-cooling	1
40	150	130	164	80	0	116	M5.M6	Forced air cooling	
75	218	130	168	112	0	116	M5.M6		2
100	285	148	210	170	0	137	M8		
125	285	148	210	170	0	137	M8		3
150	285	148	210	170	0	137	M8		
175	285	148	210	170	0	137	M8		
200	335	275	240	112	112	265	M8、M10		4
250	335	275	240	112	112	265	M8、M10		
300	335	275	240	112	112	265	M8、M10	Forced air cooling	
400	405	275	256	117	117	265	M10		5
500	405	275	256	117	117	265	M10		
※Products above 600A are customized									

V.Panel Function and Terminal Description

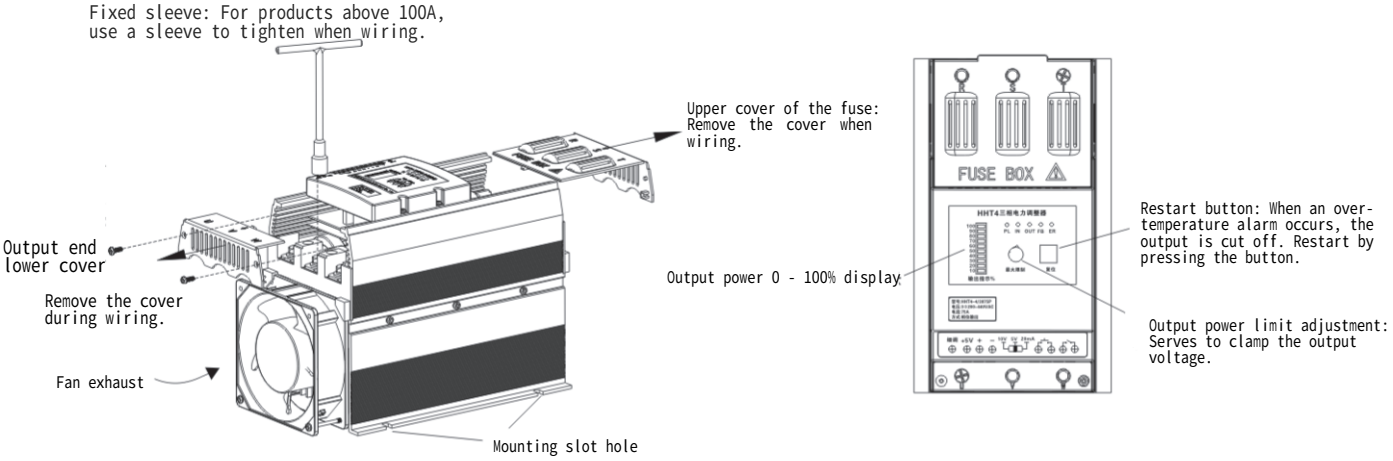

Indicator Light Symbol	Working Status	Remarks
PL	Power Indicator	
IN	Signal Input Indicator	
OUT	Load Output Indicator	
FB	Fuse Blown / Power Phase Loss Indicator	
LB	Load Open Circuit / Load Short Circuit	Optional Function (Not Available for Now)
ER	SCR Over-Temperature Indicator	

Control Terminal Symbols		Function Description
Main Control Terminals	R	Three - phase three - wire main power input: R/S/T
	S	
	T	
	U	Output load terminal: Delta connection (△), Star connection (Y)
	V	
	W	
Signal Control Terminals	RUN	Start contact: When RUN/COM is short - circuited, the regulator is in standby state; When RUN/COM is open, the regulator is in working state.
	GND	
	+5V	5V internal power supply is specially used to connect an external 2~10KΩ potentiometer for adjustment.
	+	Signal input: 0~10V/2~10V/0~5V/1~5V/4~20mA/0~20mA, switched by the band switch. Note that the signal cannot be connected reversely.
	–	
	VR1	Manual adjustment of the potentiometer or adjustment to limit the maximum output. See the wiring diagram for details. Short - circuit VR1/VR2 when the potentiometer is not used.
	VR2	
	VR3	
	NC	Normally Closed — Regulator alarm output contact: When the regulator is overheated, over - temperature, the fuse is blown, or there is phase failure, the normally open contact (NO/COM) is connected; in the normal state, the normally closed contact (NC/COM) is connected. Contact capacity: AC250V/1A
	NO	Normally Open
	COM	Common
	Fine adjustment (BIAS)	Adjust the initial value of the signal: For example, change the 0~5V signal to 1~5V. It can also be used to control the minimum signal value to achieve the lowest output. Balance adjustment when multiple units are used together.

Signal Selection				
	Band Switch Position	(10V)	(5V)	(20mA)
	Control Signal Mode	(0~10V) (2~10V)	(0~5V) (1~5V)	(4~20mA) (0~20mA)

VI.Wiring Examples

Three - phase Three - wire Wiring Diagram

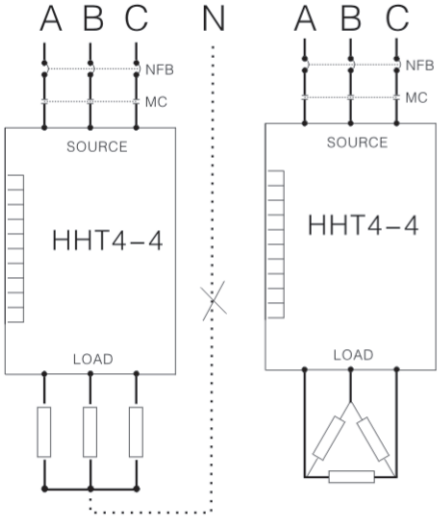

The neutral wire is not necessary to connect.

1.Automatic Instrument Control Input.

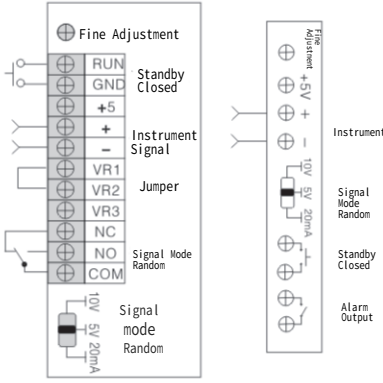

2.Instrument Control / Manual Limit.

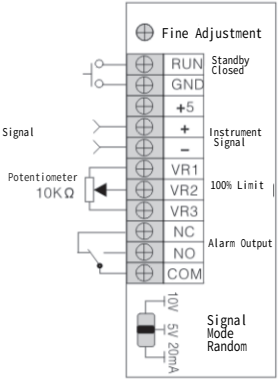

Three - phase Four - wire Wiring Diagram

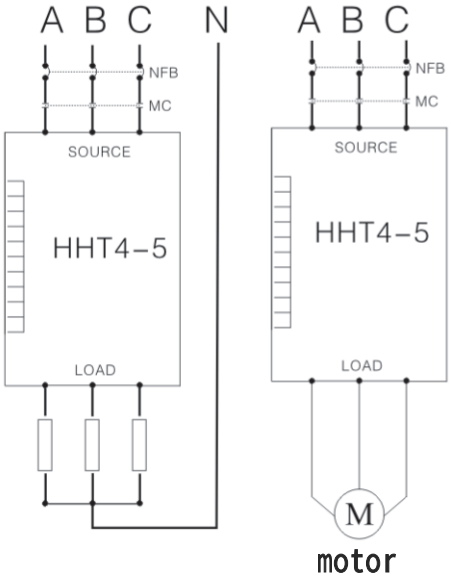

3.External Manual Adjustment.

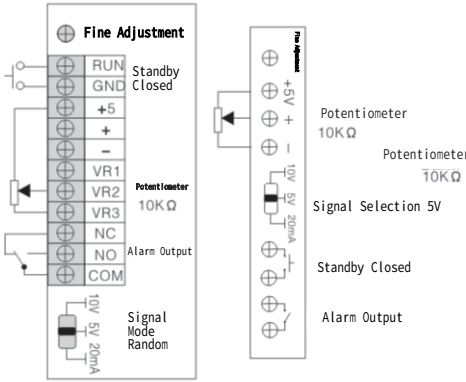

4.Manual / Automatic Switching

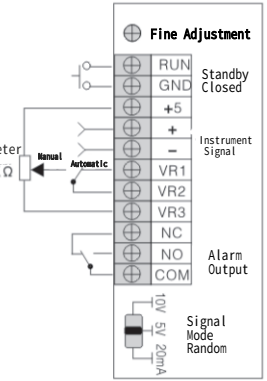

Instrument Control / Manual Limit for Three Units in Parallel

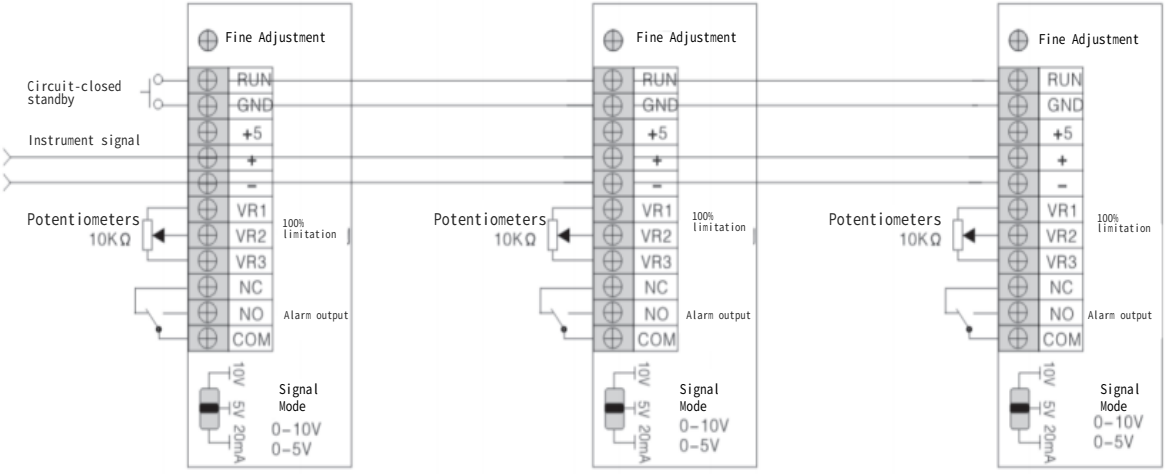

Note: The signal mode is 10V or 5V.

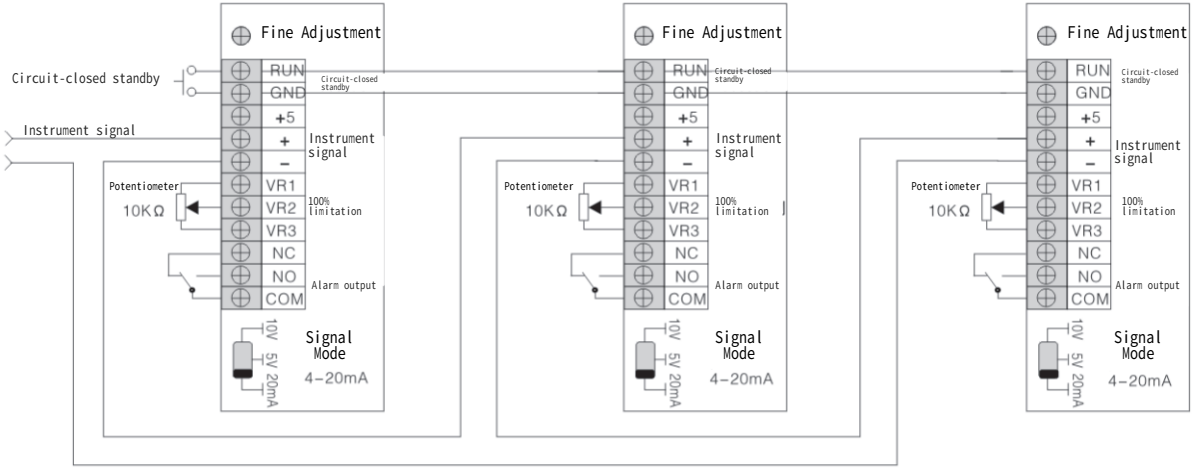

Note:
Fine Adjustment (BIAS) is used for fine-tuning the output power balance when multiple units are operated together.

VII.User Guide

■ Current or Power Calculation for Model Selection (Resistive Load); For inductive loads, use with a derating of 2~3 times.
(Single-phase): Load (KW) / Voltage (V) = Ampere (A) × 1.5 = Regulator Ampere (A)
(Three-phase): Load (KW) / Voltage (V) / 1.732 = Ampere (A) × 1.5 = Regulator Ampere (A)

■ Wiring and Planning Precautions

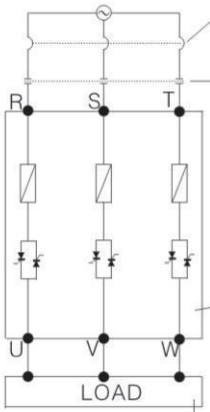

No-fuse Breaker (NFB): Can cut off the power supply to avoid personnel contact during maintenance.

Contactor (Mc): Can disconnect the power supply to the load. When the power regulator fails or the temperature exceeds the setting excessively, cut off the power to prevent equipment from being burned by high temperature or serious accidents (needs to be used with a temperature controller).

Power Regulator: Can adjust the output power according to the control signal to reach the required temperature. This product has installed high-speed fuses inside, so no additional fuses are needed externally.

Load Side: Both Δ (delta) and Y (wye) wiring are acceptable. Three-phase three-wire products do not connect to the neutral wire.

- Standard Main Circuit Rule: Main power supply → No-fuse switch → Magnetic contactor → Power regulator → Load.
- When wiring, be sure to tighten the screws to prevent high temperatures caused by poor contact.
- After wiring is completed, the front panel and safety covers must be closed before power transmission and operation to avoid electric shock or short circuit caused by conductive objects falling in.
- When the power regulator is in use, heat will be generated inside. Please install it vertically and leave gaps on both sides.
- The control box needs air vents for circulation. Please install ventilation holes or exhaust fans according to the principle of hot air rising from bottom to top.
- Avoid installing in places with severe water vapor, acid-base flow, or acid-base corrosive gases.

■ Bulb Test

For safety and engineering considerations, connect three 100W bulbs to the load end for testing before installing and using the regulator. Manually adjust the regulator with an external potentiometer and observe the brightness of the bulbs to determine if the regulator is in good condition. After the test is successful, then assemble it into the circuit.

■ Installation and Wiring

First, select the control signal and control method. This regulator is set to the control signal mode (4－20mA) at the factory. To change the setting, remove the red cover and toggle the DIP switches inside to select the required mode. Refer to item 6 and wire according to the wiring examples. When multiple regulators are adjusted simultaneously or in segments, and the load power with the same signal is inconsistent, fine adjustment can be used for compensation.

■ Basic Troubleshooting

Code	Display Status	Abnormal/Fault Cause	Handling Measures
PL	Power indicator light is not on (Light on indicates normal)	Auxiliary power not supplied PCB board fault	Check auxiliary power circuit Replace or repair the PCB board
IN	Indicator light is not on	Instrument signal no outputInstrument signal polarity reversedInternal MAX VR or external VR not zeroed	Check instrument signal Check internal MAX VR and external VR
OUT	(Phase - light on indicates normal) (Zero - flash indicates normal)	No instrument signal or IN light on but OUT light offOUT light on but no current outputPCB board fault	Check IN light (if not on, indicates instrument signal reversed or misconnected) Replace or repair the PCB board
FB	Fuse blown / power phase loss (Indicator light on indicates normal)	Fuse blown Main current not supplied or phase loss	Check main current or fuseReplace fuse; check if load is short - circuited or grounded; check main current
LB	Load open circuit / load short circuit(Light on indicates normal)	Load abnormal(This function is for adaptation)	Check if load is short - circuited or grounded; check the load
ER	SCR over - temperature indicator light on(Light on indicates abnormal)	SCR cooling fan faulty or stuck Ambient temperature too high or poor ventilation	Replace fan or remove foreign objectsImprove ventilation conditions

Note: If the controller cannot regulate and there is about 50% voltage output: This fault is caused by connecting the neutral wire to the load end for three - phase three - wire products (HHT4 - 4). When using three - phase three - wire products (HHT4 - 4), the output load should be balanced; otherwise, the output voltage will be uneven. Do not touch the side plate when it is hot during use.

Ⅷ: Warranty

This product has a warranty period of 12 months from the date of purchase. For products not used for a long time, please pay attention to protection against moisture, dust, etc. Even within the warranty period, our company provides paid services for the following reasons:

1.Due to incorrect use, self - modification, and improper maintenance;
2.Use beyond the requirements of standard specifications;
3.Damage caused by dropping or improper installation after purchase;
4.Earthquakes, fires, lightning strikes, abnormal voltages, and other secondary disasters.

Ⅸ: Packaging List

- ☑ Regulator: 1 unit
- ☑ Instruction manual: 1 copy
- ☑ Certificate of conformity: 1 sheet
- ☐ Terminal lug: 6 pieces
- ☐ 10K potentiometer: 1 piece