C-Lin
欣灵电气股份有限公司
XINLING ELECTRICAL CO.,LTD.
地址: 浙江省乐清经济开发区纬十九路328号
电话: 0577-6273 5555 传真: 0577-6272 2963
Http://www.c-lin.cn E-mail: xl@xinling.com
技术咨询: 0577-6273 1220

RECYCLABLE

国家高新技术企业 浙江省知名商号

C-Lin 欣灵

使用说明书
Products Instructions

HR Series
Intelligent Temperature Controller

Thank you very much for choosing C-Lin instruments. Please read the instruction manual before using the product.

09A067P0

I.Introduction

The HR series intelligent temperature controller (hereinafter referred to as the instrument) takes a new - type microprocessor as the core and extensively adopts the SMT (Surface Mount Technology) process. The whole - machine process is advanced and the performance is reliable. Its excellent control precision, rapid disturbance response and anti - interference ability can meet users' various temperature - control requirements. It can be widely used in the automatic control of temperature, flow, pressure, liquid level, etc. in industries such as machinery, chemical engineering, ceramics, light industry, metallurgy and petrochemical, heat treatment, etc.
This series of instruments complies with the standard GB/T 13639.

Main Features
(1) Software zero adjustment and span adjustment, automatic cold - junction compensation.
(2) Adopt industrial and expert self - tuning PID and self - adaptive technology.
(3) Four - digit dual - color LED digital tubes display the measured value and the set value respectively.

II.Main Technical Parameters

●Input
Various thermocouples (TC), thermal resistors (RTD)

●Precision
1.Measurement accuracy: ±1.0% FS
2.Cold junction compensation error: ±2°C (software - correctable within the range of 0 - 50°C)
3.Resolution: 1.0
4.Sampling period: 0.3 Sec

●Display
1.Measured value (PV), set value (SV): -1999 ~ +9999
2.Output, alarm, and self - tuning status indication: LED

●Control Mode
1.PID control (position PID and continuous PID) 2.On - off control (ON/OFF)

●Control Output
1.Main control relay output: Contact capacity 250VAC 3A (resistive load)
2.Voltage pulse output: 0 ~ 12V (suitable for solid - state relays SSR)
3.Alarm function output: Up to 2 groups of outputs, 12 modes
4.Alarm relay output: Contact capacity 250VAC 3A (resistive load)

●Setting Range
1.Set value (SV): Same as the range of PV
2.Proportional band (P): 0 ~ Full range (ON/OFF control when set to 0)
3.Integration time (I): 0 ~ 3600Sec (no integration when set to 0)
4.Differential time (D): 0 ~ 3600Sec (no differential action when set to 0)
5.Proportional cycle: 1 ~ 100Sec
6.Hysteresis of on - off control output: 1 ~ 100°C (or other PV units)

●Others
1.Insulation resistance: > 50MΩ (500VDC)
2.Dielectric strength: 1500VAC for 1 minute
3.Power consumption: ≤ 3VA
4.Operating environment: 0 - 50°C, 45 - 85% RH, in environments without corrosive gases

III.Product Identification

HR 101
HR 401
HR 701

□ □ — □ * □ □ — Additional Functions

① ② ③ ④ ⑤

① Control Mode
F: Auto-tuning reverse action (Heating control)
D: Auto-tuning direct action (Cooling control)
W: ON/OFF position control
② Sensor Input TypeRefer to Table 2 for detailed sensor type definitions.
③ Main Output 1 (OUT1)
M: Relay output
④ Main Output 2 (OUT2)
V: SSR (Solid-State Relay) output
⑤ First Alarm (AL1) Type
N: No alarm configured A: Upper deviation alarm B: Lower deviation alarm
C: Out-of-range alarm D: In-range alarmH: Upper absolute value alarm
J: Lower absolute value alarm
⑥ Second Alarm (AL2) Type
N: No alarm configured A: Upper deviation alarm B: Lower deviation alarm
C: Out-of-range alarm D: In-range alarm H: Upper absolute value alarm
J: Lower absolute value alarm

Table 1: Model Dimensions Unit: (mm)

Model	Front Panel (Width × Height × Depth)	Cutout Size (Width × Height)
HR 101	48×48×78	45×45
HR 401	48×96×78	45×92
HR 701	72×72×78	68×68

IV.Installation

1.The instrument should be installed in an environment meeting the following conditions:(1) Atmospheric pressure: (86 - 106) kPa;(2) Ambient temperature: 0 - 50°C;(3) Relative humidity: (45 - 85) %RH;

2.During installation, avoid the following situations:
(1) Condensation caused by sudden changes in ambient temperature;(2) Corrosive or flammable gases;(3) Contamination by water, oil, chemicals, smoke, or vapor;(4) Direct vibration or impact on the main structure;(5) Excessive dust, salt, or metal powder;(6) Direct blowing from air conditioners, direct sunlight, or heat radiation accumulation areas.

3.Installation process:
(1) Drill rectangular holes on the panel for instrument installation according to the panel hole - opening dimensions.(2) When installing multiple instruments, the distance between the left and right holes should be greater than 25mm; the distance between the upper and lower holes should be greater than 30mm.(3) Embed the instrument into the opening of the panel, and insert the mounting bracket into the instrument mounting slot.(4) Push the mounting bracket tightly to make the instrument firmly combined with the panel, and then tighten the screws with a screwdriver, but prevent over - tightening.

V.Panel parts and names (taking HR101 as an example)

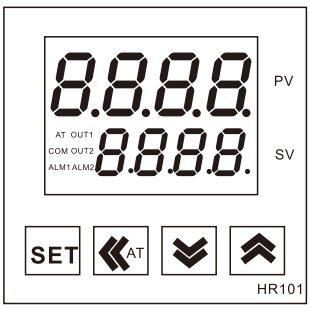

NO	Panel Description	Content Description
1.	PV	Measured value / Mode display value
2.	SV	Set value / Mode content display value
3.	OUT1	Output 1 indicator light
4.	OUT2	Output 2 indicator light
5.	AT	PID auto - tuning indicator light
6.	ALM1	Alarm 1 indicator light
7.	ALM2	Alarm 2 indicator light
8.	≪	Increase key
9.	≫	Decrease key
10.	⟪	Shift key
11.	SET	Set, Mode key

VI.Terminal Function Configuration

1.Terminal Configuration for the HR101 Series(For actual wiring, refer to the diagram attached to the instrument housing.)

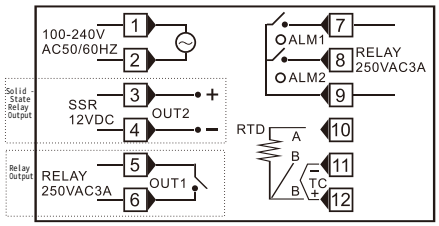

AL1: First Alarm;
AL2: Second Alarm

Terminal configuration of the HR401 series
(For actual wiring, please refer to the diagram attached to the instrument housing.)

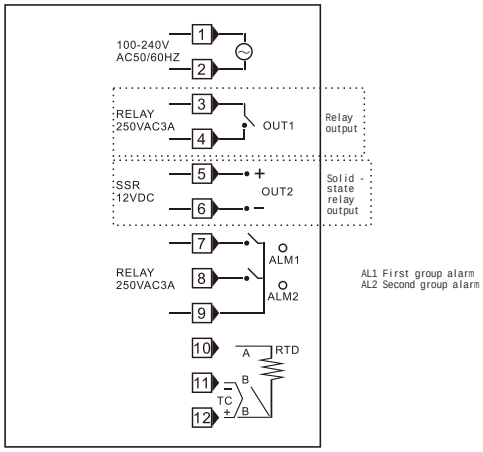

Terminal configuration for the HR701 series (For actual wiring, please refer to the diagram attached to the instrument housing.).

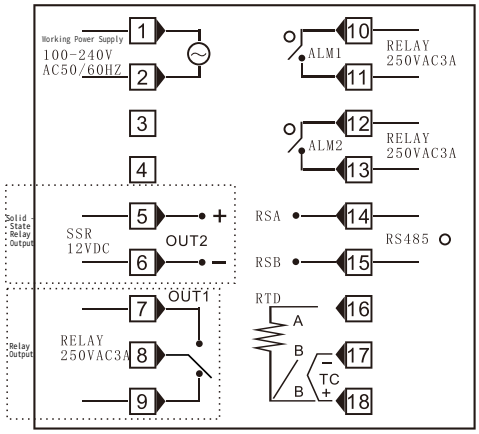

VII.Instrument Operation Process

1.Call - out Sequence of Each Mode:

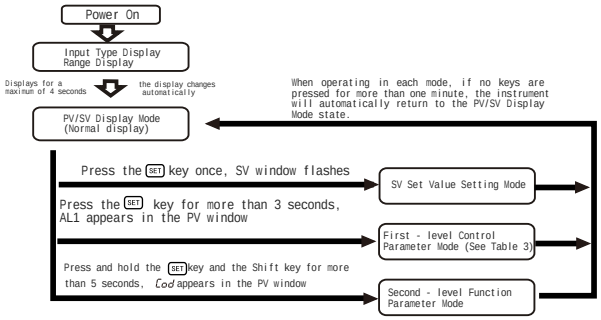

After the instrument is powered on, it will immediately display the input type and range. For example, as shown in the following figure: The input type is a K - type thermocouple, and its range is 0 - 1300 degrees.

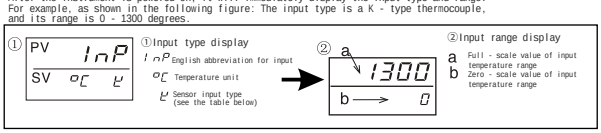

Table 2: Input Sensor Types

Display Symbol					
Input Type	Thermocouple (TC)				Resistance Temperature Detector (RTD)
	K	J	E	N	Pt100

Table 3: Description of Control Parameters in the First - Level Menu

Symbol	Name	Description	Setting Range	Default Value
AL1 / AL1	First Alarm Setting	Set different alarm values based on the alarm mode.	Full scale	10
AL2 / AL2	Second Alarm Setting	Set different alarm values based on the alarm mode.	Full scale	20
ATU / ATU	Auto - Tuning	The instrument automatically calculates PID control parameters.	0000: Disable auto - tuning 0001: Enable auto - tuning	0000
P / P	Proportional Band	Set the proportional band for temperature control. If "P" is set to "0000", it switches to ON/OFF control (typically set to "0030").	0 ~ Full scale; ON/OFF control when set to 0000	30
I / I	Integral Time (S)	Integral time constant. Increase I if temperature fluctuates regularly; decrease I if temperature stabilizes slowly. Values between 60~240 seconds suit most systems.	0 ~ 3600 seconds	240
d / d	Derivative Time (S)	Derivative time constant. Increasing D reduces overshoot but weakens anti - interference. D is generally 1/4 of I.	0 ~ 3600 seconds	60
Ar / Ar	Integral Action Range	Limit the effective range of integral action.	Automatically set after auto - tuning	5
T / T	Cycle Time (S)	1. Relay output: T = 20 seconds.2. External solid - state relay: T = 2 seconds; SCR output: T = 1 second.	0 ~ 100 seconds	20

Symbol	Name	Description	Setting Range	Name
SC / SC	Sensor Error Correction Value	Used to correct measurement errors caused by thermocouples and compensation wires	Full range	10
LCK / LCK	Data Lock	(1) When LCK=1000, all data can be modified. (2) When LCK=0001, except for "SV", "AL1", and "AL2", other parameters can be modified. (3) When LCK=0011, except for "SV", other parameters can be modified. (4) When LCK=0111, all data cannot be modified.	0000 - 1111	0000
oH / oH	Auto - tuning	The instrument automatically calculates PID control parameters	0000: Turn off auto - tuning 0001: Turn on auto - tuning	0000

① After the instrument is powered on and displays normally, press and hold the "SET" key for 3 seconds to enter the first - level control parameter menu. (See Table 3)
② For the data lock (LCK) in the first - level menu, only when it is set to "1000" can you enter the second - level control parameter menu.

Table 4 Instrument Input Type Setting

Input Type	Power - on Symbol	SL1 Setting
K -50~1350℃	°C K	0 - K
J -50~1200℃	°C J	1 - J
E -50~850℃	°C E	2 - E
n -50~1300℃	°C n	3 - n
Pt100-200~850℃	°C Pt	4 - Pt

3.Second - level Function Parameter Menu: (Instrument data lock: LCK). It can only be accessed when set to "1000".For example: Sensor input type, main control output type (heating or cooling), alarm modes (6 types), temperature range, etc. In the normal PV/SV display mode, press and hold the "SET" key and the "<" key simultaneously (see Figure 2) to enter the function parameter setting mode. The PV window displays [corresponding content], and the SV window displays 0000. After entering this mode, each press of the "SET" key will cyclically display the following code symbols in sequence.

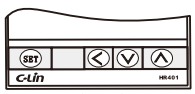

(table 2)

Flow 1 :

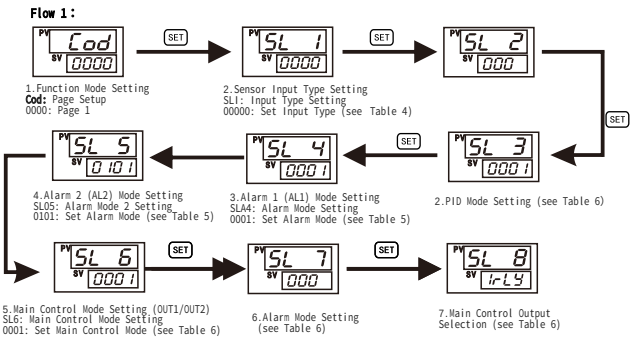

Flow 2 :

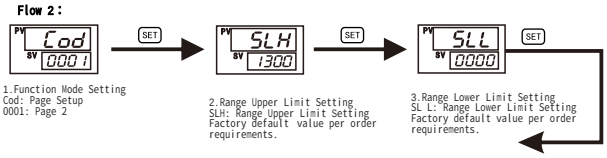

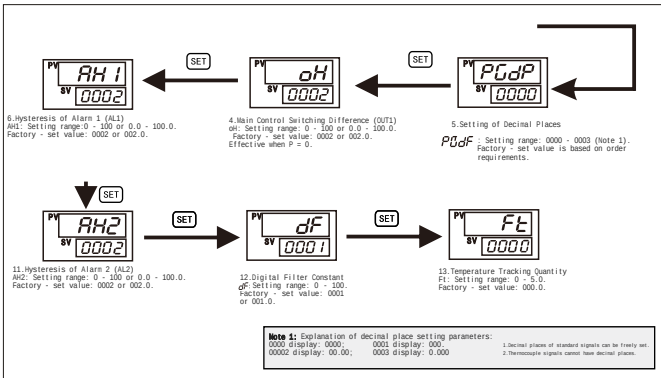

Table 5: Alarm Modes (ALM1/ALM2) ▲ Set Value (SV) △ Alarm Point

Alarm Type (ALM1/ALM2)	S.L4/S.L5 Setting	Alarm Description (Taking AL1 as an Example; AL2 Follows the Same Logic)
No First/Second Channel AlarmFunction Set	0000	No AL1 alarm.
Upper Deviation Alarm	0001	LOW (Low Temperature) — AL1 — Alarm Activates (ON) — HIGH (High Temperature); Set Value (SV); SV+AL1
Lower Deviation Alarm	0101	LOW (Low Temperature) — Alarm Activates (ON) — AL1 — HIGH (High Temperature); SV-AL1; Set Value (SV)
Out-of-Range Alarm	0010	LOW (Low Temperature) — Alarm Activates (ON) — AL1 — AL1 — Alarm Activates (ON) — HIGH (High Temperature); SV-AL1; Set Value (SV); SV+AL1
In-Range Alarm	0110	LOW (Low Temperature) — AL1 — AL1 — HIGH (High Temperature); SV-AL1; Set Value (SV); SV+AL1
Upper Absolute Value Alarm	0011	LOW (Low Temperature) — Alarm Activates (ON) — HIGH (High Temperature); AL1 Value
Lower Absolute Value Alarm	0111	LOW (Low Temperature) — Alarm Activates (ON) — HIGH (High Temperature); AL1 Value

Table 6: Process – Parameter Description

Display Symbol	Setting Value	Description	
SL 1	0 - K	K	0～1350℃
	1 - J	J	0～1200℃
	2 - E	E	0～850℃
	3 - n	N	0～1300℃
	4 - Pt	PT100	-200～850℃

SL 2	1 - °C	Celsius	Temperature Unit Setting
	2 - °F	Fahrenheit	
SL 3	P idF	Fast PID	PID Mode Setting
	P idS	Slow PID	
SL 4		A11 Alarm Mode Setting	See Table 5 for details
SL 5		A12 Alarm Mode Setting	See Table 5 for details
SL 6	0 0 0 0	Positive Action Control (Cooling)	Main Control OUT1/OUT2 Positive/ Reverse Action Selection
	0 0 0 1	Reverse Action Control (Heating)	
SL 7	0 0 0 0	Energized Alarm	Energized Alarm/Non - energized Alarm First Alarm Side (Fourth Digit Setting)
	0 0 0 1	Non - energized Alarm	
	0 0 0 0	Energized Alarm	Energized Alarm/Non - energized Alarm Second Alarm Side (Third Digit Setting)
	0 0 1 0	Non - energized Alarm	
SL 8	rLY	Select OUT1 Relay Output	Main Control Output Selection
	2SSr	Select OUT2 SSR Output	

4.Parameter Setting Operations
(1) After modifying a parameter value during operation, press the "SET" key once to save the changes.
(2) In the control parameter setting menu, press and hold the "SET" key for 3 seconds to return to the PV/SV display mode.
(3) In the function parameter setting menu, press and hold the "SET" key for 3 seconds to return to the PV/SV display mode.
(4) During operation, if no key is pressed for more than 30 seconds, the current mode will automatically return to the PV/SV display mode, and unsaved modified data will be discarded.

5.Changing the Set Value (SV)
Example: Set the set value (SV) to 300°C.

Figure 3

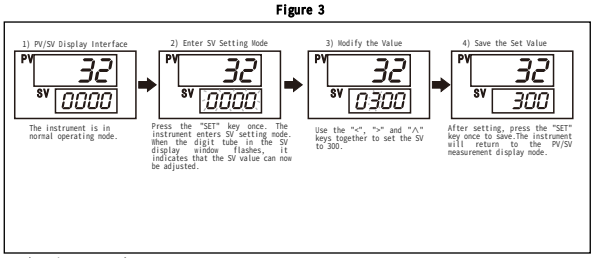

6.Changing Control Parameters
In the normal PV/SV display mode, press and hold the "SET" key for 3 seconds without releasing it to enter the control parameter setting mode. Its operation is similar to steps 2) and 3) in "Changing the Main Control Value (SV)" as illustrated in Figure 3. After finishing a setting, press the "SET" key once to save the change and proceed to the next parameter symbol. Once all parameter settings are completed, press and hold the "SET" key for 3 seconds without releasing it to return to the PV/SV display mode. (If no key operations are performed for more than 30 seconds, the instrument will automatically return to the PV/SV display mode.)

7. Changing Function Parameters
In the normal PV/SV display mode and when the data lock function LCK = 1000, press and hold the "SET" key and the "<<" key for 4 seconds without releasing to enter the function parameter setting mode. The operation is the same as steps "2) and 3)" in the "Change Main Control Value (SV)" procedure shown in Figure 3. After setting, press the "SET" key once to save the setting and enter the next parameter symbol. After all parameters are set, press and hold the "SET" key and the "<<" key for 4 seconds without releasing, and the instrument will return to the PV/SV display mode.

VIII.Explanation of Relevant Parameters and Functions

1. Auto - tuning Function (ATU)
The ATU function is used to automatically measure, calculate, and set the optimal PID constants.
1) Enabling the ATU auto - tuning function (auto - tuning): In the normal PV/SV display mode, press and hold the "SET" key for 3 seconds without releasing. The instrument will enter the first - level control parameter setting mode. Cycle through options using the "SET" key, find the function symbol "ATU", set its value to 0001, then press the "SET" key to confirm; the instrument will return to the PV/SV display mode, and the auto - tuning function will start. **You can also long - press the shift key in the measurement state to directly start auto - tuning, and the AT indicator light on the instrument panel will turn on.**

2) Indication after starting the auto - tuning function:When the AT indicator light on the panel is on, the instrument will calculate the most suitable P, I, and D parameters based on the situation of the entire heating system. The time taken is related to the system working conditions, and the operator needs to wait patiently. After the instrument enters the auto - tuning working state, the output is controlled as on - off. The temperature value of the controlled object, after two oscillations, the (AT) light will turn off, and the instrument will calculate the ideal PID parameter values and save them automatically. The instrument will then start normal operation according to the auto - tuning results, and the auto - tuning setting parameter (ATU) will automatically return to "0000". If auto - tuning is needed next time, the "ATU" parameter value must be set to "0001" again to restart auto - tuning. During the whole process, if you need to exit auto - tuning midway, find "ATU" in the control mode, set its value back to "0000", press the "SET" key to confirm, the (AT) light will turn off, and auto - tuning will exit. After auto - tuning ends and the optimal PID parameters are set, even if the power is cut off, the set PID parameters will still be saved. Therefore, there is no need to perform auto - tuning again during subsequent operation.

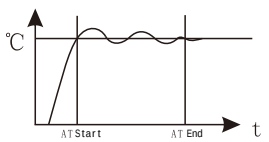

2.Changing the Input Type and Temperature Range of the Meter Sensor
When the input type is changed , the corresponding range of the meter also needs to be adjusted. Refer to the following example for specific steps.
Example: When modifying a Type K (0～400°C) meter to a Pt100 type (-50.0°C～400.0°C), follow these steps:
(1) Step 1: Modify the input type:
Enter the second - level function parameter setting mode.
When COD = 0000, select the first page and reset the SL1 value to "8 - Pt1". Press the "SET" key to confirm, and the input type will be changed to Pt100.
(2) Step 2: Modify the range:
Enter the second - level function parameter setting mode and select the second page. When COD = 0001, change the value of the decimal point setting "PGdP" to 0001 (one decimal place). Then, set the "SLH" value to "400.0" (upper range limit). Finally, change the "SLL" value to "-50.0" (lower range limit). Press the "SET" key to confirm the completion of the changes, and long - press the SET key to return to the normal display mode.

3.Setting the Differential Value for On - off Control (ON/OFF) Meters
In on - off control, an appropriate differential value must be set. If the differential value is too small, it will cause the AC contactor to operate frequently, reducing its service life. If the differential value is too large, the controlled value will fluctuate significantly. When the "P" value in the first - level control mode parameters is set to "0000", the symbol "OH" appearing in the menu represents the differential value. The magnitude of the differential value "OH" can be freely set according to user requirements. For example, if a user requires that the controlled object is energized to work when the temperature is below the lower limit (such as 80°C) and de - energized to stop working when the temperature is above the upper limit (such as 100°C), the main control relay contact (OUT1) of the on - off meter can be used to achieve this function. In this example, set SV to 100°C and OV to 20°C (100 - 80 = 20). Other different temperature requirements can also be calculated in the same way.

4. Correcting Errors Caused by Sensors
In practical applications, sensors may fail to be installed in the ideal measurement area due to various reasons, and the sensors themselves also have inherent errors. In such cases, the signal measured by the instrument cannot reflect the accurate temperature. This may lead to user misunderstandings in some situations and compromise the authenticity of measurements. Therefore, correcting the displayed value is sometimes necessary. Follow the instrument's setup procedure: In the first-level control mode parameters, when the "SC" character appears in the upper PV display window, modify the value in the lower SV display window. After finishing, press the "SET" key again to input the corrected value into the instrument. (Warning: The factory-set correction value is 00. Do not modify this value without standard testing.)

5. Data Lock Function
The data lock (LCK) function is designed to prevent misoperations on parameters that are not frequently adjusted. The instrument has 3 levels of lockout states. Parameters can be locked at each level; once locked, parameters cannot be set or changed but remain viewable.

6.Fault Diagnosis and Maintenance

(1) If you doubt the accuracy of the instrument, insert the sensor into a fully stirred ice - water mixture. The instrument should display around 0°C. Insert the sensor into boiling water under standard atmospheric pressure; the instrument should display around 100°C. If the error is large, it is generally caused by a mismatch between the sensor's calibration number and the instrument.

(2) If the displays of various functions on the instrument panel and the setting of parameters are normal, and the indicator lights act accordingly, but the instrument loses control, it is usually because the external load of the instrument is short - circuited, open - circuited, or miswired, causing damage to the internal components of the instrument. At this time, open the instrument. If it is contact output, check if the connection wires are charred. If it drives a silicon - controlled rectifier, check if the pulse transformer or photoelectric coupler has an open - circuit phenomenon. If there are the above situations, please send the instrument back to the manufacturer for repair.

(3) Display Fault 1:

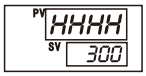

If the measured value PV displays "HHHH" as shown in the above figure, it may be that the measured value (PV) exceeds the maximum measurement range of the instrument, or the thermocouple is broken, or there is an instrument fault.

(4) Display Fault 2:

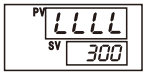

If the measured value PV displays "LLLL" as shown in the above figure, it may be that the thermocouple signal wires are reversed, or the thermal resistor is short - circuited, or there is a fault in the temperature measurement probe, or there is an instrument fault.

IX.Ordering Information

It is necessary to specify the product model, working power supply, and order quantity.

For example: HR401 FK - V*AN, AC220V, 5 sets

<Attachment>: 1 pair of mounting brackets; 1 copy of the instruction manual

Order Information and Matching Components

1) Order information includes:

Product name, model, and extended function type Rated working voltage: Default AC100 - 240V

Length of matching sensor connection line

Quantity, Delivery date, etc.

2) Components matched with the controller:

Controller mounting bracket

1 copy of the product instruction manual