中国驰名商标 国家高新技术企业

欣灵电气股份有限公司
Xinling Electrical Co., Ltd.

Address: No. 328, Weijiu Road, Economic Development Zone, Yueqing City, Zhejiang Province
Hotline: 0577-62735555 Fax: 0577-62722963
Http://www.xinling.com www.c-lin.cn Email: xl@xinling.com
Technical consultation: 0577-62731237

C-Lin 欣灵电气

使用说明书
Products Instructions

LX-D4C

Series Waterproof Limit Switch

Thank you very much for using the C-Lin brand waterproof limit switch. Please read the instruction manual before using the product!

23B012E1

I: Purpose and scope of application

LX-D4C series waterproof limit switch (hereinafter referred to as limit switch) has dustproof, waterproof and oil-resistant properties, and is suitable for circuit control and limit function of mechanical equipment working in harsh environments.

This series of limit switches conforms to GB 14048.5 and IEC 60947-5-1 standards.

II: Model and meaning

LX- D4C– □ □ □□

- Transmission type
- Cable Specification
- Electrical Ratings (See table below)
- Design Number
- Limit switch

Electrical Rating Code Description	Cable Rating Specification Code Description	Transmission type code description
1: Ue:AC250V Ie:1A 2: Ue:AC125V Ie:0.1A	2: V CTF oil resistant flexible cable 3m 3: V CTF oil resistant flexible cable 5m	01: Plunger type 02: Roller plunger type 03: Lateral roller plunger type 20: Roller lever type 31: Sealed plunger type 32: Sealed roller plunger type 33: Sealed lateral roller plunger type 50: Plastic soft rod type 69: Spring soft rod type

III: The main technical parameters

1. Conventional heating current Ith : 5A.
2. Rated voltage ue: LX-D4C-1 is AC250V DC220V, LX-D4C-2 is AC125V DC30V.
3. Rated working current Ie: LX-D4C-1 is AC1A DC0.3A, LX-D4C-2 is AC0.1A DC0.1A.
4. Operating frequency: Electrical operating frequency 25 times/min, mechanical operating frequency 120 times/min.
5. Electrical life: above $1*10^5$
6. Mechanical life: above $1*10^7$
7. Use category: AC-15 DC-13
8. Withstand voltage (see the table below)

Experimental part	Test voltage value (AC effective value)
Between non-connected terminals	1890V
Between terminal and ground	2500V
Between terminals and non-live metal parts	2500V

IV: Normal working conditions

1. Ambient operating temperature: -10℃~+70℃ (no freezing).
2. Humidity: humidity <95%RH.
3. Pollution level: The maximum pollution level is 3.
4. Protection level: IP67.

V: Installation method

1. Multi-unit installation

When using multiple units, up to 6 units can be installed. Please match the installation direction according to the concave and convex grooves on the switch surface. When using multiple units, please use a mounting plate with a thickness of more than 6mm, and then fix it with M4 hexagonal bolts.

2. Mounting plate requirements: Warping or convexity of the mounting plate may cause malfunctions. Please ensure that the mounting plate is not warped or concave.

3. Installation hole size

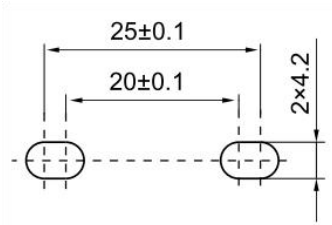

VI: Contact method (as shown in the figure)

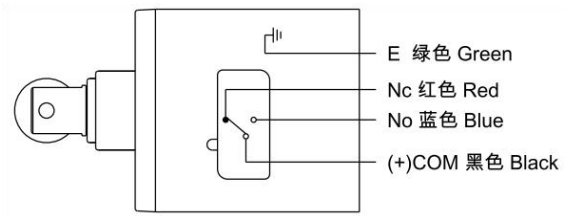

VII: Dimensions

Working characteristics
Actuation pressure (maximum OF): 580gf
Reset force minimum (RF): 150gf
Pre-travel (PT) maximum: 25°
Differential (MD) maximum: 3°
Overtravel (OT) minimum: 40°
Actuation position (OP): -

Working characteristics
Actuation pressure (maximum OF): 1800gf
Reset force minimum (RF): 450gf
Pre-travel (PT) maximum: 1.8mm
Differential (MD) maximum: 0.2mm
Overtravel (OT) minimum: 3mm
Actuation position (OP): 24±1mm

LX-D4C-1220

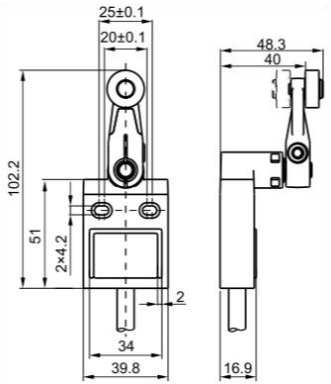

LX-D4C-1231

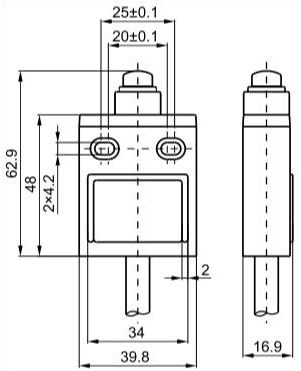

Working characteristics
Actuation pressure (maximum OF): 1800gf
Reset force minimum (RF): 450gf
Pre-travel (PT) maximum: 1.8mm
Differential (MD) maximum: 0.2mm
Overtravel (OT) minimum: 3mm
Actuation position (OP): 34.3±1mm

LX-D4C-1232

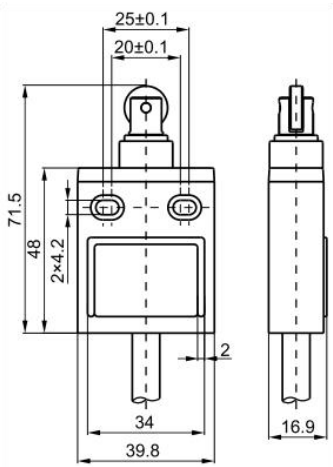

Working characteristics
Actuation pressure (maximum OF): 1800gf
Reset force minimum (RF): 450gf
Pre-travel (PT) maximum: 1.8mm
Differential (MD) maximum: 0.2mm
Overtravel (OT) minimum: 3mm
Actuation position (OP): 34.3±1mm

LX-D4C-1233

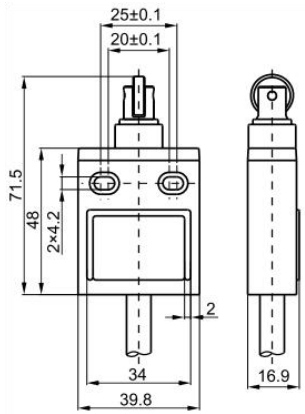

Working characteristics
Actuation pressure (maximum OF): 150gf
Reset force minimum (RF): -
Pre-travel (PT) maximum: 15°
Differential (MD) maximum: -
Overtravel (OT) minimum: -
Actuation position (OP): -

LX-D4C-1250

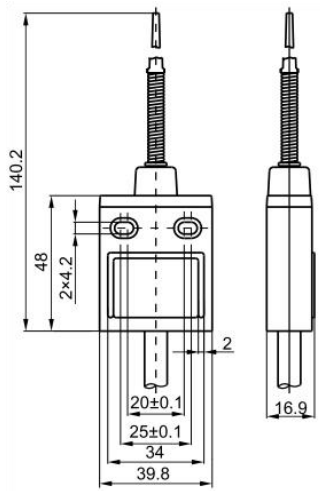

Working characteristics
Actuation pressure (maximum OF): 150gf
Reset force minimum (RF): -
Pre-travel (PT) maximum: 15°
Differential (MD) maximum: -
Overtravel (OT) minimum: -
Actuation position (OP): -

LX-D4C-1269

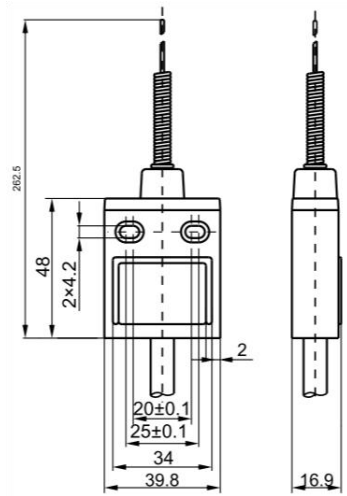

VIII: Instructions for use

1. Notes on installation

a) The bottom of the wire and the switch are fixed with resin. Therefore, to ensure that the wire is not stressed, please fix it 5cm away from the switch. See Figure 1.

b) When the wire is bent, the bending radius of the wire must be above R45mm. Do not damage the insulation layer and sheath of the wire. It may cause short circuit, burnout and leakage. See Figure 1.

c) The operation mode, shape, frequency and overtravel of the cam and push rod will greatly affect the life and accuracy. Therefore, it is recommended that the push rod angle should be below 30°, the surface roughness should be above 6.3, and the hardness should be Hv=400~500 (see Figure 2).

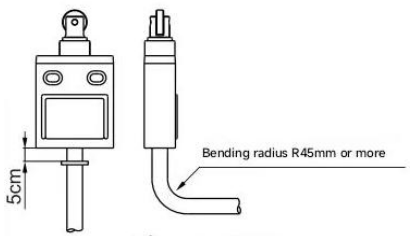

Figure 1

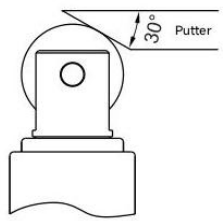

Figure 2

2. To prevent damage to the switch due to a short circuit, please connect a fuse in series with the switch that has a cutoff current value equivalent to 1.5 to 2 times the rated current.

3. For the multi-unit installation structure, please refer to Figure 3.

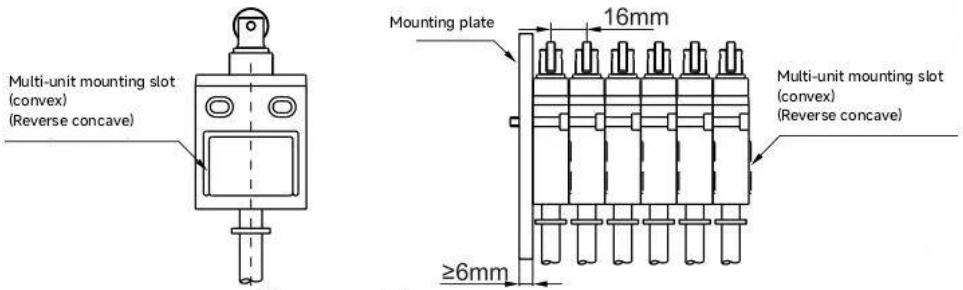

Figure 3

4. The direction of the LX-D4C-1220 arm can be adjusted. Loosen the two screws on the top cover, turn the top cover 180° and tighten the screws to use it.

5. Please do not use it in places where it may be exposed to hot water or steam (above +70℃).

6. Contact resistance: The initial value of 3m cable is within 300mΩ, and the initial value of 5m cable is within 400mΩ.