中国驰名商标 国家高新技术企业

C-Lin
欣灵电气股份有限公司
XINLING ELECTRIC CO.,LTD
Address: No. 328, 69th Road, Wenzhou Economic Development Zone, Zhejiang Province
Hotline: 0577-62735555
Fax: 0577-62722963
Http://www.xinling.com Website: www.c-lin.cn Email: C-Lin@xinling.com
Technical Consultation: 0577-62731216

RECYCLABLE

China Well-Known Trademark/China International High-Tech Enterprise

C-Lin 欣灵

使用说明书
Products Instructions

LX-ME/8000
Series Limit Switches

Thank you very much for using C-Lin brand Limit Switches!
Please read the user manual before using the product!

23B001E1

I.Overview

The LX-ME/8000 series limit switches are suitable for control circuits or auxiliary circuits with AC 50Hz/60Hz (voltage up to 380V) or DC (voltage up to 250V). They are used for control, limit, positioning, travel, signal or program conversion. This series of limit switches features excellent performance, high operational reliability, long service life, strong water and oil resistance, as well as a compact, exquisite and elegant appearance. They are widely applied in machinery, electronics, light industry, military and other industries.

II.Main Features

1.Double-circuit limit switch.

2.Sturdy structure, composed of zinc alloy and reinforced plastic.

3.Small size, water and oil resistant.

4.Equipped with large over travel (OT) operation.

5.Conduit design for easy wiring.Multiple types of actuators for convenient use.

III.Model and Its Interpretation

ME/ □

- Type of actuator (see Note 1)
- Limit Switch
- Company identifier

Note 1
8104: Roller lever swing arm type
8122: Vertical roller plunger type
8107: Adjustable metal rod swing arm type
8166: Plastic flexible rod universal type
8108: Roller lever swing arm type
8168: Metal flexible rod universal type
8111: Plunger type
8169: Steel wire flexible rod universal type
8112: Horizontal roller plunger type
9101: Spring coil universal type

IV.Rated Values

Rated Voltage	Non-inductive Load				Inductive Load			
	Resistive Load		Lamp Load		Inductive Load		Motor Load	
	NC	NO	NC	NO	NC	NO	NC	NO
125VAC	5	5	1.5	0.7	3	3	2	1
250VAC	5	5	1	0.5	3	3	1.5	0.8
500VAC								
8VDC	5	5	3	3	5	4	3	3
14VDC	5	5	3	3	4	4	3	3
30VDC	5	5	3	3	4	4	3	3
125VDC	0.4	0.4						
250VDC	0.2	0.2						
Inrush Current	N.C. ≤24A N.O. ≤12A							

V.Output Circuit Diagram

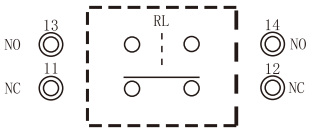

VI.Contact Type

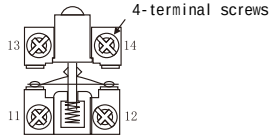

VII.Operation Characteristics

Parameter	LX-ME8104	LX-ME8108	LX-ME8107	LX-ME8111	LX-ME8112/8122	LX-ME8166/8167/8168/8169
OF Max.	750g	750g	750g	900g	900g	150g
RF Min.	100g	100g	100g	150g	150g	–
PT Max.	20°	20°	20°	1.5mm	1.5mm	30mm
OT Min.	50°	50°	50°	4mm	4mm	–
MD Max.	12°	12°	12°	1mm	1mm	–
OP	–	–	–	26±0.8mm	37±0.8mm	–

VIII.Performance

Operating Speed	0.5mm～50cm/s
Operating Frequency	Mechanical: 120 cycles/min; Electrical: 30 cycles/min
Contact Resistance	≤25mΩ (initial)
Insulation Resistance	≥100MΩ (at ≤500VDC)
Withstand Voltage	Between non-consecutive terminals: 1,000VAC, 50/60Hz for 1 minuteBetween live parts and ground: 2000VAC, 50/60Hz for 1 minute
Vibration	Misoperation resistance: 10Hz～55Hz, 1.5mm double amplitude
Impact	Mechanical resistance: 1,000m/s²; Misoperation resistance: 300m/s²
Ambient Temperature	During operation: -5℃～+65℃
Ambient Humidity	≤95%RH
Service Life	Mechanical: ≥20 million cycles; Electrical: ≥300,000 cycles
Protection Rating	IP65

IX.Installation Diagram

Fully open wiring structure for easier wiring operations:
Remove the bottom cover, and the terminal area is fully exposed — this eliminates the trouble of inserting fingers into holes for wiring. Despite the product's small size, it offers ample wiring space; the terminals You can either tighten the wires directly with screws or use U-shaped or circular crimp terminals for wiring.

Can be installed from the front or rear

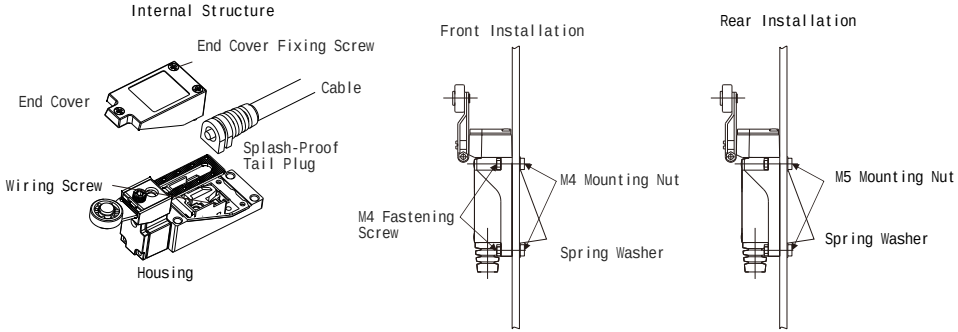

X.Appearance and Dimensions

LX-ME8104

Operating Characteristics

Maximum Operating Force (OF): 7.4N (0.75kgf)
Minimum Return Force (RF): 0.1N (1kgf)
Maximum Pre-Travel (PT): 20°
Maximum Movement Differential (MD): 50°
Minimum Over-Travel (OT): 12°
Operating Position (OP): N/A

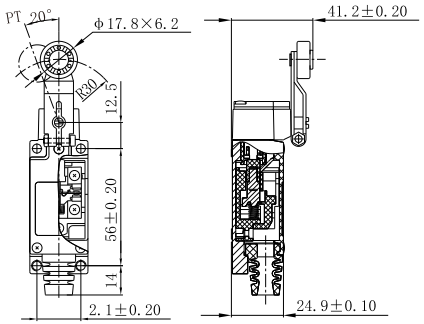

LX-ME8107

Operating Characteristics

Maximum Operating Force (OF): 7.4N (0.75kgf)
Minimum Return Force (RF): 0.1N (1kgf)
Maximum Pre-Travel (PT): 20°
Maximum Movement Differential (MD): 50°
Minimum Over-Travel (OT): 12°
Operating Position (OP): N/A

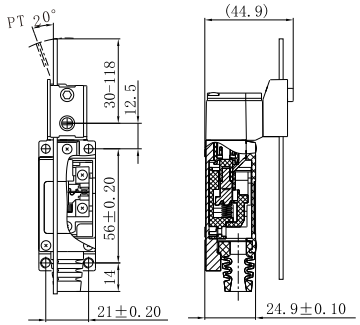

Operating Characteristics

Maximum Operating Force (OF): 7.4N (0.75kgf)Minimum Return Force (RF): 0.1N (1kgf)
Maximum Pre-Travel (PT): 20°
Maximum Movement Differential (MD): 50°
Minimum Over-Travel (OT): 12°
Operating Position (OP): N/A

LX-ME8108

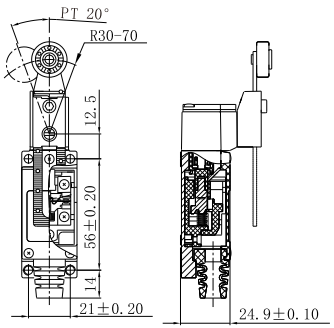

Operating Characteristics

Maximum Operating Force (OF): 8.9N (0.9kgf)
Minimum Return Force (RF): 1.5N (0.15kgf)
Maximum Pre-Travel (PT): 1.5mm
Maximum Movement Differential (MD): 4mm
Minimum Over-Travel (OT): 1mm
Operating Position (OP): 26±0.8mm

LX-ME8111

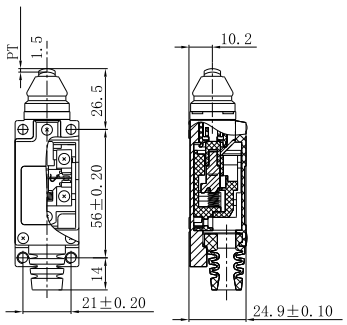

Operating Characteristics

Maximum Operating Force (OF): 8.9N (0.9kgf)
Minimum Return Force (RF): 1.5N (0.15kgf)
Maximum Pre-Travel (PT): 1.5mm
Maximum Movement Differential (MD): 4mm
Minimum Over-Travel (OT): 1mm
Operating Position (OP): 37±0.8mm

LX-ME8112

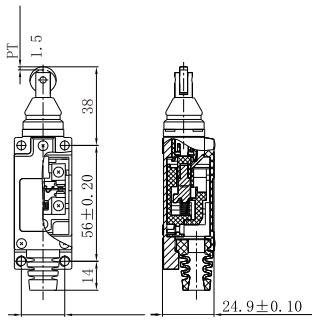

Operating Characteristics

Maximum Operating Force (OF): 8.9N (0.9kgf)
Minimum Return Force (RF): 1.5N (0.15kgf)
Maximum Pre-Travel (PT): 1.5mm
Maximum Movement Differential (MD): 4mm
Minimum Over-Travel (OT): 1mm
Operating Position (OP): 37±0.8mm

LX-ME8122

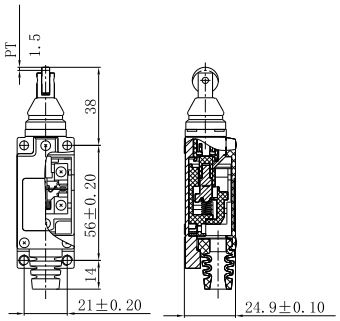

Operating Characteristics

Maximum Operating Force (OF): 1.5N (0.15kgf)
Minimum Return Force (RF): -
Maximum Pre-Travel (PT): 30mm
Maximum Movement Differential (MD): -
Minimum Over-Travel (OT): -
Operating Position (OP): -

LX-ME81 66

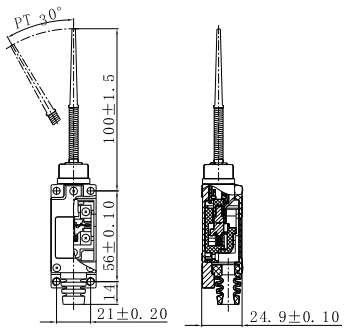

Operating Characteristics

Maximum Operating Force (OF): 1.5N (0.15kgf)
Minimum Return Force (RF): -
Maximum Pre-Travel (PT): 30mm
Maximum Movement Differential (MD): -
Minimum Over-Travel (OT): -
Operating Position (OP): -

LX-ME 816 8

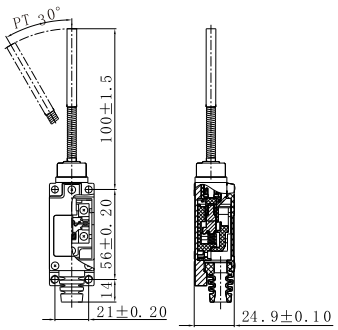

Operating Characteristics

Maximum Operating Force (OF): 1.5N (0.15kgf)
Minimum Return Force (RF): -
Maximum Pre-Travel (PT): 30mm
Maximum Movement Differential (MD): -
Minimum Over-Travel (OT): -
Operating Position (OP): -

LX- ME8 169

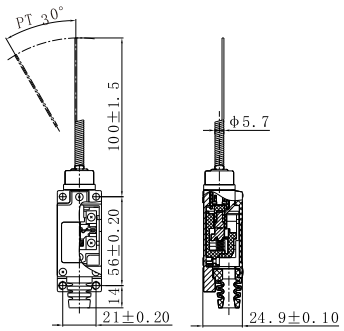

Operating Characteristics

Maximum Operating Force (OF): 1.5N (0.15kgf)
Minimum Return Force (RF): -
Maximum Pre-Travel (PT): 30mm
Maximum Movement Differential (MD): -
Minimum Over-Travel (OT): -
Operating Position (OP): -

LX-M E91 01

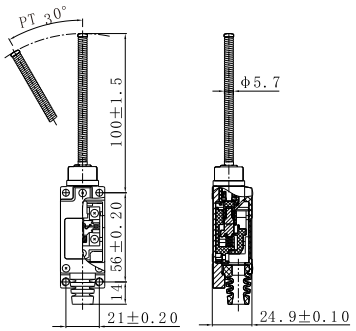

XI.Mounting Holes and Machining Dimensions

Front Mounting (When the device panel has no through holes)

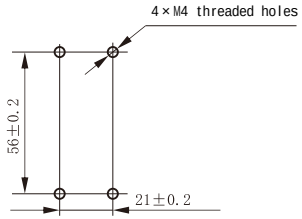

Use screws no longer than 15mm

Front Mounting (When the device panel has through holes)

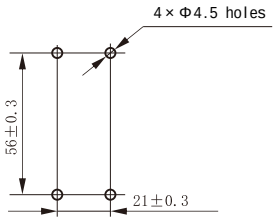

Panel thickness ≤5mm

Rear Mounting

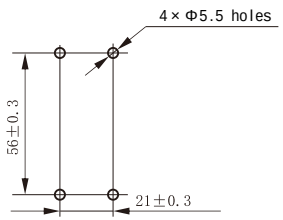

Use screws with a length ≤ (panel thickness t + 7mm)

XII.Wiring

The head direction is adjustable (only applicable to LX-ME8108, 8104, 8107):
By loosening a single locking screw, the drive shaft seat can be set in 4 arbitrary directions in 90° increments.

(Continued on next page)

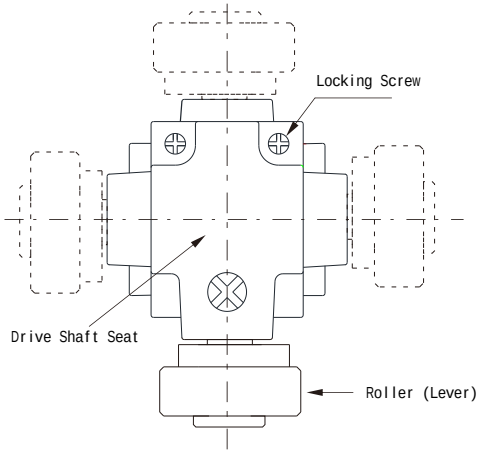

Note: Do not use in water, oil, or areas frequently exposed to water or oil.