浙江格亚电气有限公司

联系我们

地　　址：浙江省温州乐清市北白象镇大桥工业园区
销售热线：13567770207
电　　话：0577-62771712
E-mail：sale@cnyeya.com　www.cngeya.com

⚠ 本样本册为格亚电气部分产品，因产品技术不断创新，请以实物为准，届时恕不另行通知。
业务数据，请详细向我公司销售部门了解确认，本册作为业务宣传为商业目的。
© 格亚电气有限公司拥有最终解释权。

本手册采用生态纸印刷

专业电缆接头供应商

尼龙电缆防水接头，波纹管快速接头，尼龙堵塞件

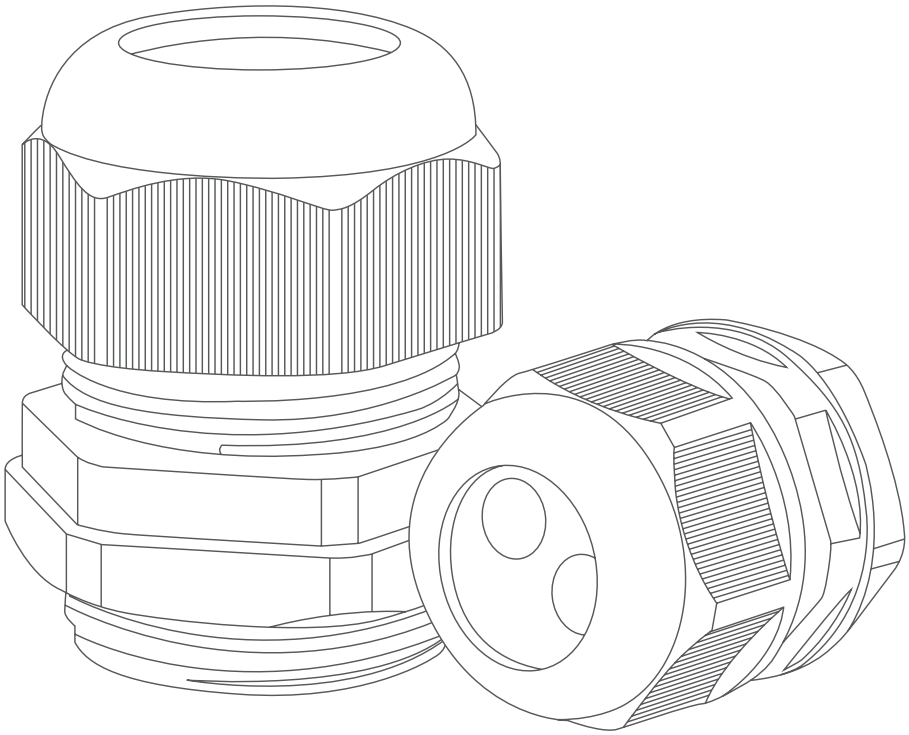

www.cngeya.com

浙江格亚电气有限公司

牵手 完美连接
保障电能传输与分配

一直致力于电气领域的传承和不断进步，
潜心保障电能传输与分配。
作为电气安装和电缆接入产品的研发和生产商，
通过我们强大的研发创意和解决方案，
以客户为核心以及快速的交货彰显东晓电气品牌的实力。

使命与责任共存，
牵手，就是我给你的承诺 .....
无论现在还是将来！

高端尼龙电缆接头

采用 PA 原料，韧性高、抗压力强、使用寿命长。
高密封性防水接头，保障电缆接线安全使用。

Advanced Nylon Cable Gland

Using PA raw materials, it has high toughness, strong resistance to pressure and long service life.
High-tightness waterproof connector to ensure the safe use of cable wiring.

目录 CONTENTS

01

M 型尼龙电缆防水接头 (连体)
M type nylon cable glands
(United structure)

02

M 型尼龙电缆防水接头 (分体)
M type nylon cable glands
(Divided structure)

03

PG 型尼龙电缆防水接头
(连体)
PG type nylon cable glands
(United structure)

04

PG 型尼龙电缆防水接头
(分体)
PG type nylon cable glands
(Divided structure)

05

G、NPT 型尼龙电缆
防水接头
G, NPT type nylon
cable glands

06

M 型多孔、扁孔尼龙电缆
防水接头
M type muitiple hole nylon
cable glands

07

M 型耐扭式尼龙电缆接头
M type spiral nylon
cable gland

08

PG、NPT、G 型耐扭式
尼龙电缆接头
PG, NPT, G type spiral nylon
cable gland

09

M 型 90 度尼龙电缆防水接头
(分体)
M type 90 degree nylon cable
glands(Divided structure)

10

M、PG、G、NPT 型
波纹管快速接头
M, PG, G, NPT type quick
connector for fiexible pipes

11

M、PG 型防水型浪管接头
M, PG type watertight
corrugated tubibing fitting

12

M、PG 型高抗拉波纹管接头
M, PG type superb pullout
strength conduit fitting

13

M、PG 型 90 度
波纹管快速接头
M, PG type 90 degree quick
connector for fiexible pipes

14

M、PG、G、NPT 型
尼龙堵塞件
M, PG, G, NPT type nylon
piug the pieces

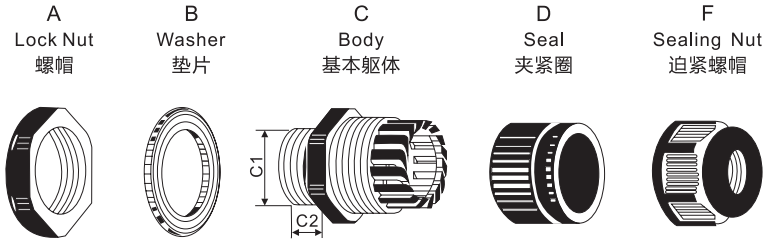

M 型尼龙电缆防水接头（连体）

- 螺纹规格：公制牙 M。
- 材料：A、C、F 部分由 UL 认可尼龙 PA66 制成，B、D 部分由丁腈橡胶 (NBR) 制成。
- 工作温度：静态 -40 ~100℃，瞬时热阻高达 120℃；动态 -20-80℃，瞬时热阻高达 100℃。
- 特点：夹紧圈和橡胶件的特殊设计，夹持电缆的范围大，超强的抗拉伸力，防水性，防尘性，耐盐、酸、碱、醇、脂、通用溶剂的能力强。
- 防护等级：IP68。
- 颜色：黑色，灰色，以及特殊颜色，可按要求设计。
- 备注：特殊尺寸和型号，请与我们联系。

M Type Nylon Cable Glands (United Structure)

- Thread spec.: Metric.
- Material: Parts A,C, F are made of UL approved nylon PA66,parts B and D are made of nitrile butadiene rubber (NBR).
- Working temperature; -40℃ to 100℃ in static state, instantaneous heat resistance up to 120℃ ; -20℃ to 80℃ in dynamic state. instantaneous heat resistance up to 100℃ centigrade.
- Characteristics: Special design of clamping die and rubber part, large range in clamping cable, ultra-strong stretching resistance, waterproof, dustproof, and highability to resist salt, acid, alkali, alcohol, grease and general solvent.
- Protection grade: IP68.
- Color: Black,grey as well as special colors that can be designed at request.
- Note:Special size and type, please contant us.

螺牙型号 Thread	型号 Item No.	适用电缆 Cable range	螺纹外径 (mm) Thread O.D C1	螺纹长度 (mm) Thread Length C2	扳手直径 (mm) Spanner size A & CF
M8×1.25	M8B-4.5	2.5-4.5	8	7.5	13/12
	M8B-2.5	1-2.5	8	7.5	13/12
M10×1.5	M10B-6	2-6	10	8	15/13
	M10B-3	1.5-3	10	8	15/13
M12×1.5	M12BS-6.5	3-6.5	12	8	17/16
	M12BS-5.5	3-5.5	12	8	17/16
	M12BSL-6.5	3-6.5	12	15	17/16
	M12BSL-5.5	3-5.5	12	15	17/16
	M12B-8	4-8	12	9	17/19
	M12B-5.5	3-5.5	12	9	17/19
M16×1.5	M16BS-8	4-8	16	9	22/19
	M16BS-5.5	3-5.5	16	9	22/19
	M16BSL-8	4-8	16	15	22/19
	M16BSL-5.5	3-5.5	16	15	22/19
	M16B-10	6-10	16	9	24/22
	M16B-7	4-7	16	9	24/22
	M16BL-10	6-10	16	15	24/22
	M16BL-7	4-7	16	15	24/22
M18×1.5	M18B-10	6-10	18	9	24/22
	M18B-7	4-7	18	9	24/22
	M18BL-10	6-10	18	15	24/22
	M18BL-7	4-7	18	15	24/22
M20×1.5	M20BS-12	7-12	20	10	27/24
	M20BS-9	5-9	20	10	27/24
	M20BSL-12	7-12	20	15	27/24
	M20BSL-9	5-9	20	15	27/24
	M20B-14	8.5-14	20	10	27/27
	M20B-11	7-11	20	10	27/27
	M20BL-14	8.5-14	20	15	27/27
	M20BL-11	7-11	20	15	27/27
M25×1.5	M25B-18	12-18	25	12	33/33
	M25B-16	11-16	25	12	33/33
	M25BL-18	12-18	25	15	33/33
	M25BL-16	11-16	25	15	33/33
M32×1.5	M32B-25	18-25	32	12	41/41
	M32B-22	16-22	32	12	41/41
M40×1.5	M40B-32	24-32	40	15	52/52
	M40B-26	21-26	40	15	52/52
M50×1.5	M50B-39	31-39	50	20	60/62
	M50B-32	26-32	50	20	60/62
M63×1.5	M63B-44	32-44	63	20	74/68
	M63B-38	30-38	63	20	74/68

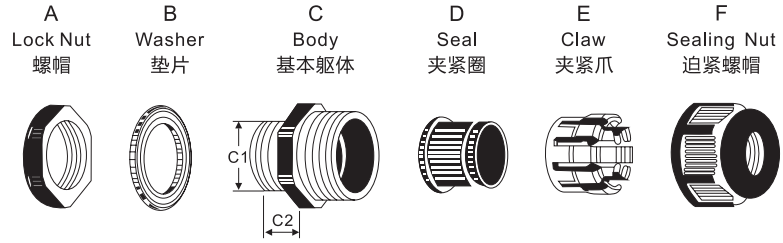

M 型尼龙电缆防水接头（分体）

- 螺纹规格：公制牙 M。
- 材料：A、C、E、F 部分由 UL 认可尼龙 PA66 制成，B、D 部分由丁腈橡胶 (NBR) 制成。
- 工作温度：静态 -40~100℃，瞬时热阻高达 120℃；动态 -20-80℃，瞬时热阻高达 100℃。
- 特点：夹紧圈和橡胶件的特殊设计、夹持电缆的范围大，超强的抗拉伸力，防水性，防尘性，耐盐、酸、碱、醇、脂、通用溶剂的能力强。
- 防护等级：IP68。
- 颜色：黑色、灰色，以及特殊颜色，可按要求设计。
- 备注：特殊尺寸和型号，请与我们联系。

GEYA®

M Type Nylon Cable Glands (Divided Structure)

- Thread spec.: Metric.
- Material: Parts A,C,E,F are made of UL approved nylon PA66, parts B and D are made of nitrile butadiene rubber (NBR).
- Working temperature:-40℃ to 100℃ in static state, instantaneous heat resistance up to 120℃ ;-20℃ to 80℃ in dynamic state. instantaneous heat resistance up to 100℃ centigrade.
- Characteristics: Special design of clamping die and rubber part, large range in clamping cable, ultra-strong stretching resistance, waterproof, dustproof, and high ability to resist salt, acid, alkali, alcohol, grease and general solvent.
- Protectiongrade: IP68.
- Color: Black,grey as well as special colors that can be designed at request.
- Note:Special size and type, please contant us.

螺牙型号 Thread	型号 Item No.	适用电缆 Cable range	螺纹外径 (mm) Thread O.D C1	螺纹长度 (mm) Thread Length C2	扳手直径 (mm) Spanner size A & CF
M12×1.5	M12A-8	4-8	12	9	17/19
	M12A-5.5	3-5.5	12	9	17/19
M16×1.5	M16AS-8	4-8	16	9	22/19
	M16AS-5.5	3-5.5	16	9	22/19
	M16ASL-8	4-8	16	15	22/19
	M16ASL-5.5	3-5.5	16	15	22/19
	M16A-10	6-10	16	9	24/22
	M16A-7	4-7	16	9	24/22
	M16AL-10	6-10	16	15	24/22
	M16AL-7	4-7	16	15	24/22
M18×1.5	M18A-10	6-10	18	9	24/22
	M18A-7	4-7	18	9	24/22
	M18AL-10	6-10	18	15	24/22
	M18AL-7	4-7	18	15	24/22
M20×1.5	M20AS-12	7-12	20	10	27/24
	M20AS-9	5-9	20	10	27/24
	M20ASL-12	7-12	20	15	27/24
	M20ASL-9	5-9	20	15	27/24
	M20A-14	8.5-14	20	10	27/24
	M20A-11	7-11	20	10	27/24
	M20AL-14	8.5-14	20	15	27/24
	M20AL-11	7-11	20	15	27/24
M25×1.5	M25A-18	12-18	25	12	33/33
	M25A-16	11-16	25	12	33/33
	M25AL-18	12-18	25	15	33/33
	M25AL-16	11-16	25	15	33/33
M32×1.5	M32A-25	18-25	32	12	41/41
	M32A-22	16-22	32	12	41/41
M40×1.5	M40A-32	24-32	40	15	52/52
	M40A-26	21-36	40	15	52/52
M50×1.5	M50A-41	31-39	50	20	60/62
	M50A-32	26-32	50	20	60/62
M63×1.5	M63A-45	32-44	63	20	74/68
	M63A-38	30-38	63	20	74/68

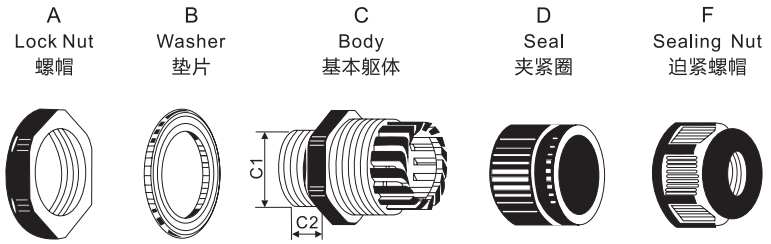

PG 型尼龙电缆防水接头（连体）

- 螺纹规格：德制牙 PG。
- 材　料：A、C、F 部分由 UL 认可尼龙 PA66 制成，B、D 部分由丁腈橡胶（NBR）制成。
- 工作温度：静态 -40-100℃，瞬时热阻高达 120℃；动态 -20-80℃，瞬时热阻高达 100℃。
- 特点：夹紧圈和橡胶件的特殊设计，夹持电缆的范围大，超强的抗拉伸力，防水性，防尘性，耐盐、酸、碱、醇、脂、通用溶剂的能力强。
- 防护等级：IP68。
- 颜色：黑色，灰色，以及特殊颜色，可按要求设计。
- 备注：特殊尺寸和型号，请与我们联系。

PG Type Nylon Cable Glands (United Structure)

- Thread spec: PG.
- Material: Parts A, C, F are made of UL approved nylon PA66, parts B and D are made of nitrile butadiene rubber (NBR).
- Working temperature: -40℃ to 100℃ in static state, instantaneous heat resistance up to 120℃ ; -20℃ to 80℃ in dynamic state. instantaneous heat resistance up to 100℃ centigrade.
- Characteristics: Special design of clamping die and rubber part, large range in clamping cable, ultra-strong stretching resistance, waterproof, dustproof, and high ability to resist salt, acid, alkali, alcohol, grease and general solvent.
- Protection grade: IP68.
- Color: Black, grey as well as special colors that can be designed at request.
- Note: Special size and type,please contant us.

螺牙型号 Thread	型号 Item No.	适用电缆 Cable range	螺纹外径 (mm) Thread O.D C1	螺纹长度 (mm) Thread Length C2	扳手直径 (mm) Spanner size A& CF
PG7	PG7BS-6.5	3-6.5	12.5	8	17/16
	PG7BS-5.5	3-5.5	12.5	8	17/16
	PG7B-8	4-8	12.5	9	17/19
	PG7B-5.5	3-5.5	12.5	9	17/19
PG9	PG9B-8	4-8	15	9	22/19
	PG9B-5.5	3-5.5	15	9	22/19
PG11	PG11B-10	6-10	18.6	9	24/22
	PG11B-7	4-7	18.6	9	24/22
PG13.5	PG13.5B-12	7-12	20.4	10	27/24
	PG13.5B-9	5-9	20.4	10	27/24
PG16	PG16B-14	8.5-14	22.5	10	30/27
	PG16B-11	7-11	22.5	10	30/27
PG21	PG21B-18	12-18	28.3	12	35/33
	PG21B-16	11-16	28.3	12	35/33
PG29	PG29B-25	18-25	37	12	45/42
	PG29B-22	16-22	37	12	45/42
PG36	PG36B-31	24-31	47	15	56/52
	PG36B-26	21-26	47	15	56/52
PG42	PG42B-39	31-39	54	20	65/62
	PG42B-32	26-32	54	20	65/62
PG48	PG48B-44	32-44	59.3	20	70/68
	PG48B-38	30-38	59.3	20	70/68
PG63	PG63B-42	42-53	70	26	82/75

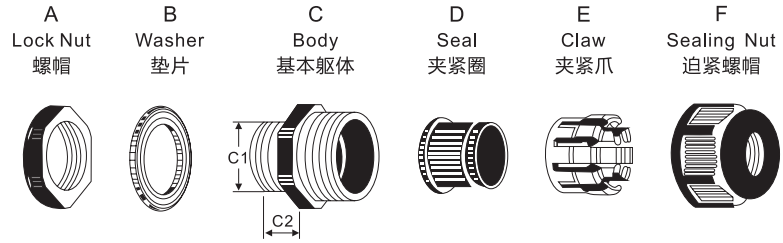

PG 型尼龙电缆防水接头（分体）

- 螺纹规格：德制牙 PG。
- 材　料：A、C、E、F 部分由 UL 认可尼龙 PA66 制成，B、D 部分由丁腈橡胶（NBR）制成。
- 工作温度：静态 -40-100℃，瞬时热阻高达 120℃；动态 -20-80℃，瞬时热阻高达 100℃。
- 特点：夹紧圈和橡胶件的特殊设计，夹持电缆的范围大，超强的抗拉伸力，防水性，防尘性，耐盐、酸、碱、醇、脂、通用溶剂的能力强。
- 防护等级：IP68
- 颜色：黑色，灰色，以及特殊颜色，可按要求设计。
- 备注：特殊尺寸和型号，请与我们联系。

PG Type Nylon Cable Glands (Divided Structure)

- Thread spec.: PG.
- Material: Parts A, C, E, F are made of UL approved nylon PA66, parts B and D are made of nitrile butadiene rubber (NBR).
- Working temperature: -40℃ to 100℃ in static state, instantaneous heat resistance up to 120℃ ; -20℃ to 80℃ in dynamic state. instantaneous heat resistance up to 100℃ centigrade.
- Characteristics: Special design of clamping die and rubber part, large range in clamping cable, ultra-strong stretching resistance, waterproof, dustproof, and high ability to resist salt, acid, alkali, alcohol, grease and general solvent.
- Protection grade: IP68.
- Color: Black, grey as well as special colors that can be designed at request.
- Note: Special size and type,please contant us.

螺牙型号 Thread	型号 Item No.	适用电缆 Cable range	螺纹外径 (mm) Thread O.D C1	螺纹长度 (mm) Thread Length C2	扳手直径 (mm) Spanner size A & CF
PG7	PG7A-8	4-8	12.5	9	17/19
	PG7A-5.5	3-5.5	12.5	9	17/19
PG9	PG9A-8	4-8	15	9	22/19
	PG9A-5.5	3-5.5	15	9	22/19
PG11	PG11A-10	6-10	18.6	9	24/22
	PG11A-7	4-7	18.6	9	24/22
PG13.5	PG13.5A-12	7-12	20.4	10	27/24
	PG13.5A-9	5-9	20.4	10	27/24
PG16	PG16A-14	8.5-14	22.5	10	30/37
	PG16A-11	7-11	22.5	10	30/27
PG21	PG21A-18	12-18	28.3	12	35/33
	PG21A-16	11-16	28.3	12	35/33
PG29	PG29A-25	18-25	37	12	45/42
	PG29A-22	16-22	37	12	45/42
PG36	PG36A-31	24-31	47	15	56/52
	PG36A-26	21-26	47	15	56/52
PG42	PG42A-39	31-39	54	20	65/62
	PG42A-32	26-32	54	20	65/62
PG48	PG48A-44	32-44	59.3	20	70/68
	PG48A-38	30-38	59.3	20	70/68
PG63	PG63B-42	42-53	70	26	82/75

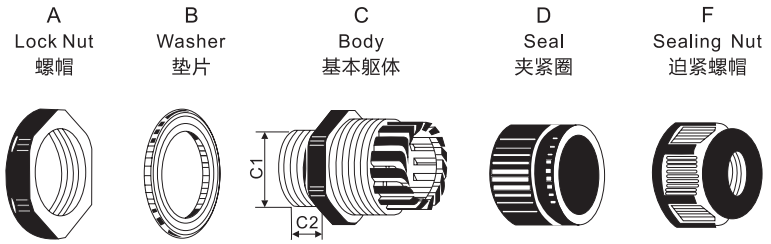

G、NPT 型尼龙电缆防水接头

- 螺纹规格：英制牙 G(PF/BSP/PS) 美制牙 NPT。
- 材料 :A、C、F 部分由 UL 认可尼龙 PA66 制成，B、D 部分由丁腈橡胶 (NBR) 制成。
- 工作温度：静态 -40-100℃，瞬时热阻高达 120℃；动态 -20-80℃，瞬时热阻高达 100℃。
- 特点：夹紧圈和橡胶件的特殊设计，夹持电缆的范围大，超强的抗拉伸力，防水性，防尘性，耐盐、酸、碱、醇、脂、通用溶剂的能力强。
- 防护等级：IP68。
- 颜色：黑色、灰色，以及特殊颜色，可按要求设计。
- 备注：特殊尺寸和型号，请与我们联系。

G, NPT Type Nylon Cable Glands

- Thrcad spec.: G (PF/BSP/PS)NPT
- Material: Parts A,C,E are made of UL approved nylon PA66,parts B and D are made of nitrile butadiene rubber (NBR).
- Working temperature: -40℃ to 100℃ in static state, instantaneous heat resistance up to 120℃ ; -20℃ to 80℃ in dynamic state. instantaneous heat resistance up to 100℃ centigrade.
- Characteristics: Special design of clamping die and rubber part, large range in clamping cable, ultra-strong stretching resistance, waterproof, dustproof, and high ability to resist salt, acid, alkali, alcohol, grease and general solvent.
- Protection grade:IP68.
- Color: Black, grey as well as special colors that can be designed at request.
- Note: Special size and type.please contant us.

螺牙型号 Thread	型号 Item No.	适用电缆 Cable range	螺纹外径 (mm) Thread O.D C1	螺纹长度 (mm) Thread Length C2	扳手直径 (mm) Spanner size A& CF
G 3/8	G 3/8-10	6-10	16.662	10	24/22
	G 3/8-7	4-7	16.662	10	24/22
G 1/2	G 1/2-12	7-12	20.955	10	27/24
	G 1/2-9	5-9	20.955	10	27/24
G 3/4	G 3/4-18	12-18	26.441	12	35/33
	G 3/4-16	11-16	26.441	12	35/33
G1	G 1-25	18-25	33.2	12	45/42
	G 1-22	16-22	33.2	12	45/42
G 1-1/4	G 1-1/4-32	24-32	41.9	15	56/52
	G 1-1/4-26	21-26	41.9	15	56/52
NPT 3/8	NPT 3/8-10	6-10	16.662	10	22
	NPT 3/8-7	4-7	16.662	10	22
NPT 1/2	NPT 1/2-12	7-12	20.955	10	24
	NPT 1/2-9	5-9	20.955	10	24
NPT 3/4	NPT3/4-18	12-18	26.441	15	33
	NPT3/4-16	11-16	26.441	15	33
NPT1	NPT1-25	18-25	33.249	17	42
	NPT1-22	16-22	33.249	17	42
NPT1-1/4	NPT1-1/4-32	24-32	41.984	17	52
	NPT1-1/4-26	21-36	41.984	17	52

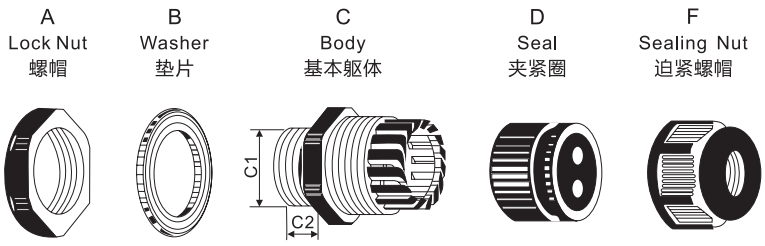

M 型多孔、扁孔尼龙电缆防水接头

- 螺纹规格：公制牙 M。
- 材料：A、C、E 部分由 UL 认可尼龙 PA66 制成，B、D 部分由丁腈橡胶 (NBR) 制成。
- 工作温度：静态 -40 ~100℃，瞬时热阻高达 120℃；动态 -20~80℃、瞬时热阻高达 100℃。
- 特点：夹紧圈和橡胶件的特殊设计，夹持电缆的范围大，超强的抗拉伸力，防水性、防尘性，耐盐、酸、碱、醇、脂、通用溶剂的能力强。
- 防护等级：IP68。
- 颜色：黑色，灰色，以及特殊颜色，可按要求设计。
- 备注：特殊尺寸和型号，请与我们联系。

M Type Muitiple Hole Nylon Cable Glands

- Thread spec.: Metric.
- Material: Parts A,C,E are made of UL approved nylon PA66, parts B and Dare made of nitrile butadiene rubber (NBR).
- Working temperature:-40℃ to 100℃ in static state, instantancous heat resistanceup to 120℃ ; -20℃ to 80℃ in dynamic state.instantaneous heat resistance up to 100℃ centigrade.
- Characteristics: Special design of clamping die and rubber part, large range in clamping cable, ultra-strong stretching resistance, waterproof, dustproof,and high ability to resist salt, acid, alkali, alcohol, grease and general solvent.
- Protection grade: IP68.
- Color: Black, grey as well as special colors that can be designed at request.
- Note:Special size and type,please contant us.

螺牙型号 Thread	型号 Item No.	适用电缆 Cable range	螺纹外径 (mm) Thread O.D C1	螺纹长度 (mm) Thread Length C2	扳手直径 (mm) Spanner size A & CF
M 型 2 孔	M12-2K-3	1.2-3	12	9	19/17
	M16-2K-4	1.6-4	16	15	22/19
	M20-2K-3.5	2-3.5	18	15	27/24
	M25-2K-5	2-5	25	15	33/33
	M32-2K-10	5-10	32	15	41/41
M 型 3 孔	M12-3K-2.6	1.2-2.6	12	9	19/17
	M16-3K-4	1.6-4	16	15	22/19
	M20-3K-5	2-5	20	15	27/24
	M25-3K-5	2-5	25	15	33/33
	M32-3K-10	5-10	32	15	41/41
M 型 4 孔	M12-4K-2.3	1-2.3	12	9	19/17
	M16-4K-3	1-2.3	16	15	22/19
	M20-4K-3.5	1.5-3.5	18	15	27/24
	M25-4K-5	2-5	25	15	33/33
	M32-4K-9	4.5-9	32	15	41/41
M 型 5 孔	M16-5K-2.5	1-2.5	16	15	22/19
	M20-5K-2.5	1.2-2.5	18	15	27/24
	M25-5K-3.5	1.5-3.5	25	15	33/33
	M32-5K-8	4-8	32	15	41/41
M 型 6 孔	M16-6K-2	1-2	16	15	22/19
	M20-6K-3	1.2-3	20	15	27/27
	M25-6K-3.5	1.5-3.5	25	15	33/33
	M32-6K-7	3.5-7	32	15	41/41
M 型 7 孔	M20-7K-3	1.2-3	20	15	27/27
	M25-7K-3.5	1.5-3.5	25	15	33/33
	M32-7K-6	3-6	32	15	41/41
M 型 8 孔	M20-8K-2.8	1-2.8	20	15	27/27
	M25-8K-3.5	1.5-3.5	25	15	33/33
M 型 扁孔	M16-BK-10	6*10	16	15	22/19
	M20-BK-12	6.5*12	20	15	27/27
	M25-BK-14	6*14	25	15	33/33
	M32-BK-22	8*22	32	15	41/41
	M40-BK-28.5	10*28.5	40	20	52/52

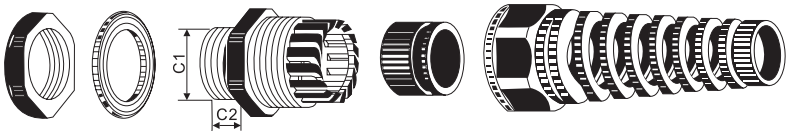

M 型耐扭式尼龙电缆接头

- 螺纹规格：公制牙 M，德制牙 PG，英制牙 G，美制牙 NPT。
- 材料：A、C、F 部分由 UL 认可尼龙 PA66 制成，B、D 部分由丁腈橡胶 (NBR) 制成。
- 工作温度：静态 -40-100℃，瞬时热阻高达 120℃；动态 -20-80℃，瞬时热阻高达 100℃。
- 特点：夹紧圈和橡胶件的特殊设计，夹持电缆的范围大，超强的抗拉伸力，防水性，防尘性，耐盐、酸、碱、醇、脂、通用溶剂的能力强。
- 防护等级：IP68。
- 颜色：黑色，灰色，以及特殊颜色，可按要求设计。
- 备注：特殊尺寸和型号，请与我们联系。

M Type Spiral Nylon Cable Gland

- Thread spec.: Metric, PG, G, NPT.
- Material: Parts A,C,F are made of UL approved nylon PA66, parts B and Dare made of nitrile butadiene rubber (NBR).
- Working temperature:-40℃ to 100℃ in static state, instantaneous heat resistanceup to 120℃ ;-20℃ to 80℃ in dynamic state. instantaneous heat resistance up to 100℃ centigrade.
- Characteristics: Special design of clamping die and rubber part, large range in clamping cable,ultra-strong stretching resistance, waterproof, dustproof, and high ability to resist salt, acid, alkali, alcohol, grease and general solvent.
- Protection grade: IP68.
- Color: Black, grey as well as special colors that can be designed at request.
- Note: Special size and type, please contant us.

螺牙型号 Thread	型号 Item No.	适用电缆 Cable range	螺纹外径 (mm) Thread O.D C1	螺纹长度 (mm) Thread Length C2	扳手直径 (mm) Spanner size A & CF
M12×1.5	M12-8	4-8	12	9	17/19
	M12-5.5	3-5.5	12	9	17/19
M16×1.5	M16S-8	4-8	16	9	22/19
	M16S-5.5	3-5.5	16	9	22/19
	M16SL-8	4-8	16	15	22/19
	M16SL-5.5	3-5.5	16	15	22/19
	M16-10	6-10	16	9	24/22
	M16-7	4-7	16	9	24/22
	M16L-10	6-10	16	15	24/22
	M16L-7	4-7	16	15	24/22
M18×1.5	M18-10	6-10	18	9	24/22
	M18-7	4-7	18	9	24/22
	M18L-10	6-10	18	15	24/22
	M18L-7	4-7	18	15	24/22
M20×1.5	M20S-12	7-12	20	10	27/24
	M20S-9	5-9	20	10	27/24
	M20SL-12	7-12	20	15	27/24
	M20SL-9	5-9	20	15	27/24
	M20-14	8.5-14	20	10	27/27
	M20-11	7-11	20	10	27/27
	M20L-14	8.5-14	20	15	27/27
	M20L-11	7-11	20	15	27/27
M25×1.5	M25-18	12-18	25	12	33/33
	M25-16	11-16	25	12	33/33
	M25L-18	12-18	25	15	33/33
	M25L-16	11-16	25	15	33/33
M32×1.5	M32-25	18-25	32	12	41/41
	M32-22	16-22	32	12	41/41

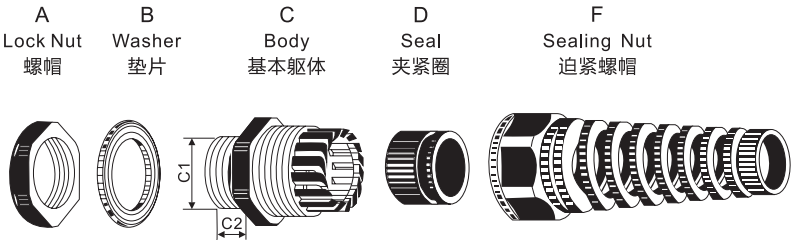

PG、NPT、G 型耐扭式尼龙电缆接头

- 螺纹规格：公制牙 M, 德制牙 PG，英制牙 G, 美制牙 NPT。
- 材料 :A、C、F 部分由 UL 认可尼龙 PA66 制成，B、D 部分由丁腈橡胶 (NBR) 制成。
- 工作温度：静态 -40 ~100℃，瞬时热阻高达 120℃；动态 -20-80℃，瞬时热阻高达 100℃。
- 特点：夹紧圈和橡胶件的特殊设计，夹持电缆的范围大，超强的抗拉伸力，防水性，防尘性，耐盐、酸、碱、醇、脂、通用溶剂的能力强。
- 防护等级：IP68
- 颜色：黑色，灰色，以及特殊颜色，可按要求设计。
- 备注：特殊尺寸和型号，请与我们联系。

PG, NPT, G Type Spiral Nylon Cable Gland

- Thread spec.: Metric, PG,G, NPT.
- Material: Parts A,C, F are made of UL approved nylon PA66, parts B and Dare made of nitrile butadiene rubber (NBR).
- Working temperature:-40℃ to 100℃ in static state, instantaneous heat resistanceup to 120℃ ;-20℃ to 80℃ in dynamic state. instantaneous heat resistance up to 100℃ centigrade.
- Characteristics: Special design of clamping die and rubber part, large rangein clamping cable,ultra-strong stretching resistance, waterproof, dustproof,and high ability to resist salt, acid, alkali, alcohol, grease and general solvent.
- Protection grade: IP68.
- Color: Black,grey as well as special colors that can be designed at request.
- Note: Special size and type, please contant us.

螺牙型号 Thread	型号 Item No.	适用电缆 Cable range	螺纹外径 (mm) Thread O.D C1	螺纹长度 (mm) Thread Length C2	扳手直径 (mm) Spanner size A& CF
PG7	PG7-8	4-8	12.5	9	17/19
	PG7-5.5	3-5.5	12.5	9	17/19
PG9	PG9-8	4-8	15	9	22/19
	PG9-5.5	3-5.5	15	9	22/19
PG11	PG11-10	6-10	18.6	9	24/22
	PG11-7	4-7	18.6	9	24/22
PG13.5	PG13.5-12	7-12	20.4	10	27/24
	PG13.5-9	5-9	20.4	10	27/24
PG16	PGPG16-14	8.5-14	22.5	10	30/27
	PG16-11	7-11	22.5	10	30/27
PG21	PG21-18	12-18	28.3	12	35/33
	PG21-16	11-16	28.3	12	35/33
NPT 3/8	NPT 3/8-10	6-10	16.662	10	22
	NPT 3/8-7	4-7	16.662	10	22
NPT 1/2	NPT 1/2-12	7-12	20.955	10	24
	NPT 1/2-9	5-9	20.955	10	24
NPT 3/4	NPT 3/4-18	12-18	26.441	15	33
	NPT 3/4-16	11-16	26.441	15	33
G 3/8	G 3/8-10	6-10	16.662	10	24/22
	G 3/8-7	4-7	16.662	10	24/22
G 1/2	G 1/2-12	7-12	20.955	10	27/24
	G 1/2-9	5-9	20.955	10	27/24
G 3/4	G 3/4-18	12-18	26.441	12	35/33
	G 3/4-16	11-16	26.441	12	35/33

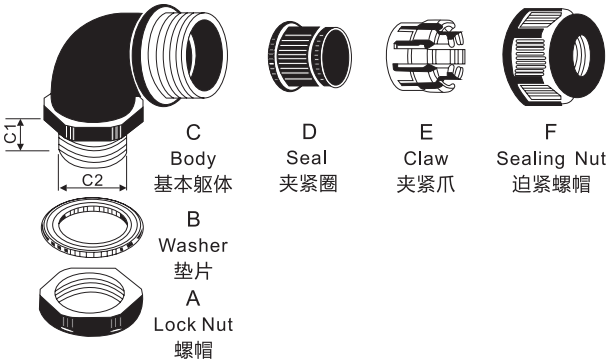

M 型 90 度尼龙电缆防水接头（分体）

- 螺纹规格：公制牙 M。
- 材料：A、C、E、F 部分由 UL 认可尼龙 PA66 制成，B、D 部分由丁腈橡胶 (NBR) 制成。
- 工作温度：静态 -40 ~100℃，瞬时热阻高达 120℃；动态 -20~80℃，瞬时热阻高达 100℃。
- 特点：夹紧圈和橡胶件的特殊设计，夹持电缆的范围大，超强的抗拉伸力，防水性，防尘性，耐盐、酸、碱、醇、脂、通用溶剂的能力强。
- 防护等级：IP68。
- 颜色：黑色、灰色，以及特殊颜色、可按要求设计。
- 备注：特殊尺寸和型号，请与我们联系。

M Type 90 Degree Nylon Cable Glands(Divided Structure)

- Thread spec.: Metric.
- Material: Parts A,C,E,F are made of ULapproved nylon PA66, parts B and Dare made of nitrile butadiene rubber (NBR).
- Working temperature:-40℃ to 100℃ in static state, instantaneous heat resistanceup to 120℃ ;-20℃ to 80℃ in dynamic state. instantaneous heat resistance up to 100℃ centigrade.
- Characteristics: Special design ofclamping die and rubber part, large range inclamping cable, ultra-strong stretching resistance, waterproof, dustproof, andhigh ability to resist salt, acid, alkali, alcohol, grease and general solvent.
- Protection grade: IP68.
- Color: Black,grey as well as special colors that can be designed at request.
- Note:Special size and type,please contant us.

螺牙型号 Thread	型号 Item No.	适用电缆 Cable range	螺纹外径 (mm) Thread O.D C1	螺纹长度 (mm) Thread Length C2	扳手直径 (mm) Spanner size A& CF
M16×1.5	M16A-E-7	4-7	16	15	24/22
	M16A-E-10	6-10	16	15	24/22
M20×1.5	M20A-E-11	7-11	20	15	27/27
	M20A-E-14	8-14	20	15	27/27
M25×1.5	M25A-E-16	12-16	25	15	33/33
	M25A-E-18	14-18	25	15	33/33
M32×1.5	M32A-E-22	16-22	32	15	41/41
	M32A-E-25	18-25	32	15	41/41
M40×1.5	M40A-E-28	20-28	40	20	55/52
	M40A-E-33	23-33	40	20	55/52

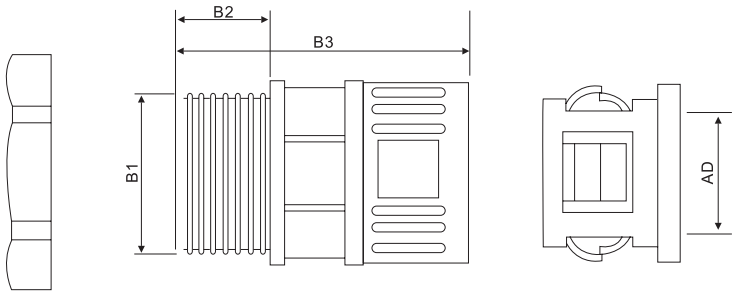

M、PG、G、NPT 型 波纹管快速接头

- 螺纹规格：公制牙 M、德制牙 PG，英制牙 G，美制牙 NPT。
- 材料：由 UL 认可尼龙 PA66 制成。
- 工作温度：静态 -40~100℃，瞬时热阻高达 120℃；动态 -20~80℃，瞬时热阻高达 100℃。
- 特点：特殊夹紧爪之设计，平紧浪管抗拉力强，超快速拔插装卸，提高安装效率。
- 颜色：黑色，灰色，以及特殊颜色，可按要求定做。
- 备注：特殊尺寸和型号，请与我们联系。

M, PG, G, NPT Type Quick Connector For Fiexible Pipes

- Thread spec.: Mctric, PG, G, NPT.
- Material: Of UL approved nylon PA66
- Working temperature:-40℃ to 100℃ in static state, instantaneous heat resistanceup to 120℃ ;-20℃ to 80℃ in dynamic state.instantancous heat resistance up to 100℃ centigrade.
- Characteristics: The claws of excellent design, to provide a fast & safe commection with the tubing ang to get anexvellent result strength to be the best balanced performers for cable protection system.
- Color: Black, grey as well as special colors that can be designed at request.
- Note: Special size and type, please contant us.

适配软管 Accommodated Pipes	螺牙型号 Thread	型号 Item No.	螺纹外径 (mm) Thread O.D B1	螺纹长度 (mm) Thread Length B2	主体长度 (mm) Joint Length B3
AD10.0	M12×1.5	AD10.0-M12	12	8	23
AD13.0	M12×1.5	AD13.0-M12	12	8	25
	M16×1.5	AD13.0-M16	16	10	25
	M18×1.5	AD13.0-M18	18	10	25
AD15.8	M16×1.5	AD15.8-M16	16	10	28
	M18×1.5	AD15.8-M18	18	10	28
	M20×1.5	AD15.8-M20	20	10	28
AD18.5	M20×1.5	AD18.5-M20	20	10	29
AD21.2	M20×1.5	AD21.2-M20	20	10	32
	M25×1.5	AD21.2-M20	25	10	32
AD25.0	M25×1.5	AD25.0-M25	25	10	33
AD28.0	M25×1.5	AD28.5-M25	25	15	35
	M32×1.5	AD28.5-M32	32	15	35
AD34.5	M32×1.5	AD34.5-M32	32	15	37
	M40×1.5	AD34.5-M40	40	15	37
AD42.5	M40×1.5	AD42.5-M40	40	15	39
AD54.5	M50×1.5	AD54.5-M50	50	18	39
	M63×1.5	AD54.5-M63	60	18	39
AD10.0	PG7	AD10.0-PG7	12.5	11.5	23
AD13.0	PG9	AD13.0-PG9	15	11.5	25
AD15.8	PG11	AD15.8-PG11	18.6	12	28
AD18.5	PG13.5	AD18.5-PG13.5	20.4	12	29
AD21.2	PG16	AD21.2-PG16	22.5	13	32
AD25.0	PG21	AD25.0-PG21	28.3	13	33
AD28.5	PG21	AD28.5-PG21	28.3	13	35
AD34.5	PG29	AD34.5-PG29	37	15	37
AD42.5	PG36	AD42.5-PG36	47	15	39
AD54.5	PG42	AD54.5-PG42	54	16	39
	PG48	AD54.5-PG48	59.3	16	39
AD10.0	G1/4	AD10.0-G1/4	13.1	8.5	23
AD13.0	G3/8	AD13.0-G3/8	16.6	10	25
AD15.8	G3/8	AD15.8-G3/8	16.6	12.5	28
	G1/2	AD15.8-G1/2	20.9	12.5	28
AD18.5	G1/2	AD18.5-G1/2	20.9	12.5	29
AD21.2	G1/2	AD21.2-G1/2	20.9	13	32
	G3/4	AD21.2-G3/4	26.4	13	32
AD25.0	G3/4	AD25.0-G3/4	26.4	13	33
AD28.5	G3/4	AD28.5-G3/4	26.4	13	35
AD34.5	G1	AD34.5-G1	33.2	14	37
AD42.5	G1-1/4	AD42.5-G1-1/4	41.9	15	39
AD54.5	G1-1/2	AD54.5-G1-1/2	48	16	39
	G2	AD54.5-G2	60	16	39

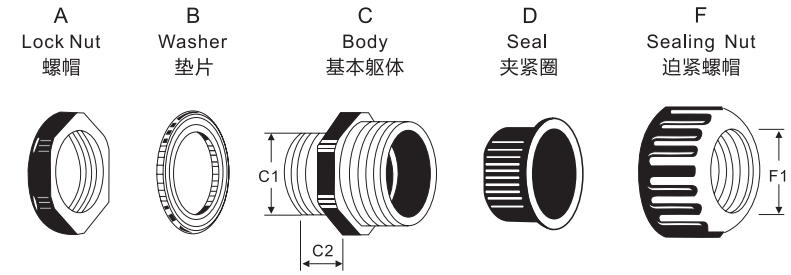

M、PG 型防水型浪管接头

- 螺纹规格：公制牙 M, 德制牙 PG, 英制牙 G，美制牙 NPT。
- 材料：A、C、F 部分由 UL 认可尼龙 PA66 制成，B、D 部分由丁腈橡胶 (NBR) 制成。
- 工作温度：静态 -40~100℃，瞬时热阻高达 120℃；动态 -20-80℃，瞬时热阻高达 100℃。
- 特点：本款高性能防水尼龙浪管接头能完美地抗水压，是一款即使拉扯波纹管也能完全保持气密的产品，产品广泛地应用于移动式的自动化设备之防水、防油与气密的场合。
- 颜色：黑色，灰色，以及特殊颜色，可按要求设计。
- 备注：特殊尺寸和型号，请与我们联系。

M, PG Type Watertight Corrugated Tubibing Fitting

- Thread spec.: Metric, PG, G, NPT.
- Material: Parts A,C,F are made of UL approved nylon PA66, parts B and Dare made of nitrile butadiene rubber (NBR).
- Working temperature:-40℃ to 100℃ in static statc, instantaneous heat resistanceup to 120℃ ;-20℃ to 80℃ in dynamic state.instantaneous heat resistance up to 100℃ centigrade.
- Characteristics: The powerful Watertight fittings build the best tighteningpower by a uery high ang active compression force to resist the ingress of highpressure water jet fon any angle which can provide 100% dynamic waterproof and airtight performance over the widest range of corrugated tubings.
- Color: Black, grey as well as special colors that can be designed at request.
- Note:Special size and type, please contant us.

适配软管 Accommodated Pipes	型号 Item No.	螺牙型号 Thread	螺纹外径 (mm) Thread O.D C1	螺纹长度 (mm) Thread Length C2	幅体最小通径 (mm) F1
AD10	FS-M12-10	M12×1.5	12	9	8
AD13	FS-M16-13	M16×1.5	16	15	11.1
	FS-M18-13	M18×1.5	18	9	10.7
AD15.8	FS-M16-15.8	M16×1.5	16	15	11
	FS-M18-15.8	M18×1.5	18	15	11
	FS-M20-15.8	M20×1.5	20	15	14.5
AD18.5	FS-M20-18.5	M20×1.5	20	15	14.5
AD21.2	FS-M20-21.5	M20×1.5	20	15	14.5
	FS-M25-21.5	M25×1.5	25	15	19
AD25	FS-M25-25	M25×1.5	25	15	19.2
AD28.5	FS-M25-28.5	M25×1.5	25	15	19.2
AD34.5	FS-M32-34.5	M32×1.5	32	15	26.3
AD42.5	FS-M40-42.5	M40×1.5	40	15	34.1
AD54.5	FS-M50-54.5	M50×1.5	50	20	41.4
	FS-M63-54.5	M63×1.5	63	20	53.6
AD10	FS-PG7-10	PG7	12.5	9	8.5
AD13	FS-PG9-13	PG9	15	9	10.4
AD15.8	FS-PG11-15.8	PG11	18.6	9	13.7
AD15.8	FS-PG13.5-15.8	PG13.5	20.4	10	15.1
AD18.5	FS-PG13.5-18.5	PG13.5	20.4	10	15.1
AD21.2	FS-PG16-21.2	PG16	22.5	10	16.1
AD25	FS-PG21-25	PG21	28.3	12	19.2
AD28.5	FS-PG21-28.5	PG21	28.3	12	23.2
AD34.5	FS-PG29-34.5	PG29	37	12	28.1
AD42.5	FS-PG36-42.5	PG36	47	15	37.3
AD54.5	FS-PG42-54.5	PG42	54	20	41.4
	FS-PG48-54.5	PG48	59.3	20	51.8

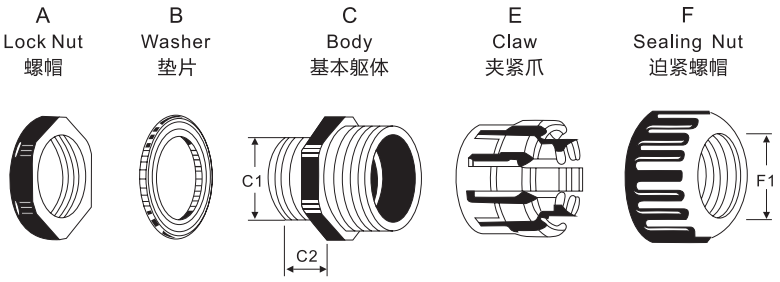

M、PG 型高抗拉波纹管接头

- 螺纹规格：公制牙 M、德制牙 PG，英制牙 G，美制牙 NPT。
- 材料：A、C、E、F 部分由 UL 认可尼龙 PA66 制成，B 部分由丁腈橡胶 (NBR) 制成。
- 工作温度：静态 -40-100℃，瞬时热阻高达 120℃；动态 -20-80℃，瞬时热阻高达 100。
- 特点：这种高性能抗拉型浪管接头适用于不同材料和不同硬度浪管。
- 颜色：黑色，灰色，以及特殊颜色，可按要求设计。
- 备注：特殊尺寸和型号，请与我们联系。

M, PG Type Superb Pullout Strength Conduit Fitting

- Thread spec.: Metric, PG, G, NPT.
- Material: Parts A,C,E,F are made of UL approved nylon PA66, parts B aremade of nitrile butadiene rubber (NBR).
- Working temperature:-40℃ to 100℃ in static state, instantaneous heat resistanceup to 120℃ ;-20℃ to 80℃ in dynamic state. instantaneous heat resistance up to 100 centigrade.
- Characteristics: This high performance tensile wave tube joint is suitable for different materials and different hardness wave tubes.
- Color: Black, grey as well as special colors that can be designed at request.
- Note: Special size and type, please contant us.

适配软管 Accommodated Pipes	型号 Item No.	螺牙型号 Thread	螺纹外径 (mm) Thread O.D C1	螺纹长度 (mm) Thread Length C2	幅体最小通径 (mm) F1
AD10	KL-M12-10	M12×1.5	12	9	8
AD13	KL-M16-13	M16×1.5	16	15	11.1
	KL-M18-13	M18×1.5	18	9	10.7
AD15.8	KL-M16-15.8	M16×1.5	16	15	11
	KL-M18-15.8	M18×1.5	18	15	11
	KL-M20-15.8	M20×1.5	20	15	14.5
AD18.5	KL-M20-18.5	M20×1.5	20	15	14.5
AD21.2	KL-M20-21.5	M20×1.5	20	15	14.5
	KL-M25-21.5	M25×1.5	25	15	19
AD25	KL-M25-25	M25×1.5	25	15	19.2
AD28.5	KL-M25-28.5	M25×1.5	25	15	19.2
AD34.5	KL-M32-34.5	M32×1.5	32	15	26.3
AD42.5	KL-M40-42.5	M40×1.5	40	15	34.1
AD54.5	KL-M50-54.5	M50×1.5	50	20	41.4
	KL-M63-54.5	M63×1.5	63	20	53.6
AD10	KL-PG7-10	PG7	12.5	8.5	8.5
AD13	KL-PG9-13	PG9	15	10	10.4
AD15.8	KL-PG11-15.8	PG11	18.6	10	13.7
	KL-PG13.5-15.8	PG13.5	20.4	10	15.1
AD18.5	KL-PG13.5-18.5	PG13.5	20.4	10	15.1
AD21.2	KL-PG16-21.2	PG16	22.5	10	16.1
AD25	KL-PG21-25	PG21	28.3	12	19.2
AD28.5	KL-PG21-28.5	PG21	28.3	12	23.2
AD34.5	KL-PG29-34.5	PG29	37	12	28.1
AD42.5	KL-PG36-42.5	PG36	47	15	37.3
AD54.5	KL-PG42-54.5	PG42	54	20	41.4
	KL-PG48-54.5	PG48	59.3	20	51.8

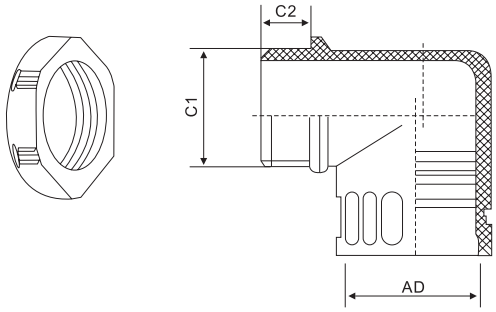

M、PG 型 90 度 波纹管快速接头

- 螺纹规格：公制牙 M, 德制牙 PG。
- 材料：由 UL 认可尼龙 PA66 制成。
- 工作温度：静态 -40~100℃，瞬时热阻高达 120℃；动态 -20~80℃，瞬时热阻高达 100℃。
- 特点：特殊夹紧爪之设计，平紧浪管抗拉力强，超快速拔插装卸，提高安装效率。
- 颜色：黑色，灰色，以及特殊颜色，可按要求定做。
- 备注：特殊尺寸和型号，请与我们联系。

M, PG Type 90 Degree Quick Connector For Fiexible Pipes

- Thread spec.: Metric, PG.
- Material: Of UL approved nylon PA66.
- Working temperature:-40℃ to 100℃ in static state, instantancous heat resistanceup to 120℃ ;-20℃ to 80℃ in dynamic state. instantaneous heat resistance up to 100℃ centigrade.
- Characteristics: Theclaws of excellent design, to provide a fast & safe commection with the tubing ang to get anexvellent result strength to be the best balanced performers for cable protection system.
- Color: Black,grey as well as special colors that can be designed at request.
- Note:Special size and type, please contant us.

适配软管 Accommodated Pipes	型号 Item No.	螺牙型号 Thread	螺纹外径 (mm) Thread O.D C1	螺纹长度 (mm) Thread Length C2
AD10.0	SM-W-M12-10	M12×1.5	12.0	10.0
	SM-W-M 16-10	M16×1.5	16.0	10.0
AD13.0	SM-W-M16-13.0	M16×1.5	16.0	10.0
	SM-W-M18-13.0	M18×1.5	18.0	10.0
	SM-W-M20-13.0	M20×1.5	20.0	10.0
AD15.8	SM-W-M16-15.8	M16×1.5	16.0	10.0
	SM-W-M 18-15.8	M18×1.5	18.0	10.0
	SM-W-M20-15.8	M20×1.5	20.0	10.0
AD18.5	SM-W-M20-18.5	M20×1.5	20.0	11.0
AD21.2	SM-W-M20-13.0	M20×1.5	20.0	13.0
	SM-W-M24-13.0	M24×1.5	24.0	13.0
	SM-W-M25-13.0	M25×1.5	25.0	13.0
AD25.0	SM-W-M25-25	M25×1.5	25.0	13.0
AD28.5	SM-W-M25-28.5	M25×1.5	25.0	13.0
	SM-W-M27-28.5	M27×1.5	27.0	13.0
	SM-W-M30-28.5	M30×1.5	30.0	13.0
	SM-W-M32-28.5	M32×1.5	32.0	13.0
AD34.5	SM-W-M32-34.5	M32×1.5	32.0	14.5
	SM-W-M36-34.5	M36×1.5	36.0	14.5
	SM-W-M40-34.5	M40×1.5	40.0	14.5
AD42.5	SM-W-M40-42.5	M40×1.5	40.0	14.5
AD54.5	SM-W-M50-54.5	M50×1.5	50.0	16.0
	SM-W-M63-54.5	M63×1.5	63.0	16.0
AD10.0	SM-W-PG7-10	PG7	12.5	10.0
AD13	SM-W-PG9-13	PG9	15.2	10.0
AD15.8	SM-W-PG11-15.8	PG11	18.6	10.0
	SM-W-PG13.5-15.8	PG13.5	20.4	10.0
AD18.5	SM-W-PG13.5-18.5	PG13.5	20.4	11.0
AD21.2	SM-W-PG16-21.2	PG16	22.5	13.0
AD28.5	SM-W-PG21-28.5	PG21	28.3	13.0
AD32.0	SM-W-PG29-32	PG29	37.0	14.0
AD34.5	SM-W-PG29-34.5	PG29	37.0	14.0
AD42.5	SM-W-PG36-42.5	PG36	47.0	14.0
AD54.5	SM-W-PG48-54.5	PG48	59.3	15.5

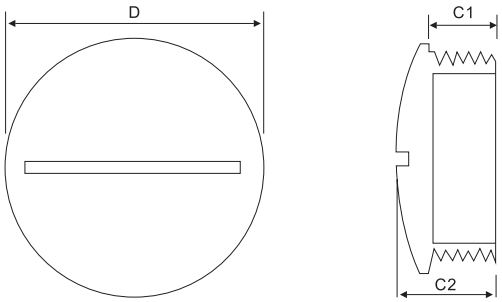

M、PG、G、NPT 型 尼龙堵塞件

- 螺纹规格：公制牙 M, 德制牙 PG，英制牙 G，美制牙 NPT。
- 材料：由 UL 认可尼龙 PA66 制成。
- 工作温度：静态 -40~100℃，瞬时热阻高达 120℃。
- 特点：填平预留孔，以达到美观作用，可防水，耐酸碱，耐腐蚀等。
- 颜色：黑色，灰色，以及特殊颜色，可按要求设计。
- 备注：特殊尺寸和型号，请与我们联系。

M, PG, G, NPT Type Nylon Piug The Pieces

- Thread spec.: Metric, PG,G,NPT.
- Material: Of UL approved nylon PA66.
- Working temperature: -40℃ to 100℃ in static state, instantancous heat resistance up to 120℃ ;
- Characteristics: Fill in the reserved hole to achieve acsthetic effect,waterproof, acid and alkali resistance, corrosion resistance and so on.
- Color: Black,grey as well as special colors that can be designed at request.
- Note: Special size and type, please contant us.

螺牙型号 Thread	型号 Item No.	螺纹长度 (mm) Thread Length C1	总高度 (mm) C2	上部直径 (mm) D
M12×1.5	DT-M12×1.5	8.5	12.5	15
M16×1.5	DT-M16×1.5	8.5	13	19
M18×1.5	DT-M18×1.5	9	13	22
M20×1.5	DT-M20×1.5	9	13	25
M22×1.5	DT-M22×1.5	10.5	15	27
M25×1.5	DT-M25×1.5	10.5	13.5	30
M27×1.5	DT-M27×1.5	10.5	15.5	33
M32×1.5	DT-M32×1.5	10.5	16	38
M40×1.5	DT-M40×1.5	11.5	16	46
M50×1.5	DT-M50×1.5	13.5	18	49
M63×1.5	DT-M63×1.5	14	19	68
PG7	DT-PG7	8.5	12.5	15
PG9	DT-PG9	8.5	13	19
PG11	DT-PG11	9	13	22
PG13.5	DT-PG13.5	9	13	25
PG16	DT-PG16	10.5	15	27
PG21	DT-PG21	8.5	13.5	33
PG29	DT-PG29	11.5	16	44
PG36	DT-PG36	13.5	18	55
PG42	DT-PG42	13.5	18.5	62
PG48	DT-PG48	14.5	19.5	68
G1/2	DT-G1/2	9	13	25
G3/4	DT-G3/4	10.5	15.5	30
G1	DT-G1	11.5	16	38
NPT1/2	DT-NPT1/2	9	13	25
NPT3/4	DT-NPT3/4	10.5	15.5	30
NPT1	DT-NPT1	11.5	16	38