ZHEJIANG GEYA ELECTRICAL CO.,LTD.

ADD: Wenzhou Brige Industrial Zone, Beibaixinag Town, Yueqing, Zhejiang, China 325603
Tel: 0086-577-62771036 Tel: 0086-13567770207
E-mail: sale@cngeya.com Web: www.geya.net

SMART HOME

Open your new horizons
Glass panel smart home multimedia information box

CONNECTED WORLD

Integrated pioneer, connected wireless; Powerful system research and development of smart home distribution and forward-looking industrial design of products. Let you see the future

In the past, we could not imagine more about electric energy except electric light; today, everything is changing, and the wonderful power will let us experience unprecedented beauty in the colorful imagination;
The new era of smart electricity is unfolding in front of you. Intelligence, humanity, interconnection, aesthetics, the beauty of smart electricity is within reach at home, even anywhere and everywhere

list...

Residential distribution box series

01 GYB1

03 GYB2

05 GYB4 PZ30

07 GYB5

09 GYM1

Multimedia information box series

11 GYX1-02

Optical fiber home box series

13 GYX1-08

Other

15 DBSF

17 GYHT

19 GYAT

21 GYSH

25 GYHA

27 GYFZ

GYB1

Metal box residential distribution box

In line with the style of modern aesthetics, Geeya Electric is proud to provide fashionable and streamlined household products. At the beginning of GYB1 series design, the earliest requirement is to have an elegant and clean design;
This house is not a simple function and use satisfaction, but is sublimated to have a decorative effect, so that it can perfectly integrate with the internal environment of various houses.
The width and height of GYB1 series is similar to that of a notebook computer, and it has the same smooth and simple appearance as other home products with cutting-edge experience.

Integrated
Pioneer
Connection
Unlimited

The distribution box is a distribution box with plastic cover and metal box, mainly used for

- Power distribution system: electrical installation, supporting and house renovation and decoration of building electrical power distribution system.
- Installation method The metal box is matched with the plastic cover, which is especially suitable for the concealed installation of the distribution box in the construction and decoration works.
- Stylish appearance design is suitable for high-end residential buildings, hotels, office buildings and other places that show modern life taste.
- The products that meet the standards have first obtained 3C certification and meet the standards of GB17466.1 and GB17466.24

Dimensions and specifications of concealed installation

Product model	Rows	Specifications	Overall dimension	Bottom box size
GYB1-9	1	9	240X200X105	217X180X85
GYB1-12	1	12	295X200X105	270X180X85
GYB1-16	1	16	366X240X105	340X220X85
GYB1-20	1	20	438X240X105	412X220X85
GYB1-24	2	24	295X480X105	268X460X85
GYB1-32	2	32	366X480X105	340X460X85
GYB1-40	2	40	438X480X105	412X460X85
GYB1-48	3	48	366X720X105	340X700X85
GYB1-60	3	60	438X720X105	412X700X85

Dimensions and specifications of surface installation

Product model	Rows	Specifications	Overall dimension	Bottom box size
GYB1-9M	1	9	240X200X105	240X200X85
GYB1-12M	1	12	295X200X105	295X200X85
GYB1-16M	1	16	366X240X105	366X240X85
GYB1-20M	1	20	438X240X105	438X240X85
GYB1-24M	2	24	295X480X105	295X480X85
GYB1-32M	2	32	366X480X105	366X480X85
GYB1-40M	2	40	438X480X105	438X480X85
GYB1-48M	3	48	366X720X105	366X720X85
GYB1-60M	3	60	438X720X105	438X720X85

GYB2

Intelligent lighting box with glass panel

To infuse the soul into every detail, Geya innovates the information box of large flat glass panel; Draw inspiration from nature, let each eye freeze and enjoy wonderful and colorful warm life.

Integrated
Pioneer
Connection
Unlimited

PZ30 terminal combination appliance is applicable to the terminal circuit of single-phase three-wire or three-phase five-wire with rated voltage of 220V or 380V and total load flow of not more than 100A, which is used to control the electrical equipment and to control overload and short circuit A complete set of devices for protection against overvoltage and leakage. It can be widely used in high-rise buildings, hotels, residences, stations, ports and airports, hospitals, theaters, large commercial outlets and industrial and mining enterprises.

Dimensions and specifications of concealed installation

Product model	Rows	Specifications	Overall dimension	Bottom box size
GYB2-16	1	16	370X270X107	340X250X90
GYB2-20	1	20	442X270X107	412X250X90
GYB2-24	2	24	298X470X107	268X450X90
GYB2-32	2	32	370X470X107	340X450X90
GYB2-40	2	40	442X470X107	412X450X90
GYB2-48	3	48	370X670X107	340X650X90
GYB2-60	3	60	442X670X107	412X650X90

Dimensions and specifications of surface installation

Product model	Rows	Specifications	Overall dimension	Bottom box size
GYB2-16M	1	16	370X270X107	340X270X90
GYB2-20M	1	20	442X270X107	412X270X90
GYB2-24M	2	24	298X470X107	268X470X90
GYB2-32M	2	32	370X470X107	340X470X90
GYB2-40M	2	40	442X470X107	412X470X90
GYB2-48M	3	48	370X670X107	340X670X90
GYB2-60M	3	60	442X670X107	412X670X90

PZ30 modular electrical distribution bix is a device for installing terminal electrical appliances. Its main features are modular size, din rail installation, artistic appearance and safe use. It has been widely used abroad.

GYB4 PZ30

Metal box residential distribution box

Integrated
Pioneer
Connection
Unlimited

PZ30 terminal combination appliance is applicable to the terminal circuit of single-phase three-wire or three-phase five-wire with rated voltage of 220V or 380V and total load flow of not more than 100A, which is used to control the electrical equipment and to control overload and short circuit

A complete set of devices for protection against overvoltage and leakage. It can be widely used in high-rise buildings, hotels, residences, stations, ports and airports, hospitals, theaters, large commercial outlets and industrial and mining enterprises.

Dimensions and specifications of concealed installation

Product model	Rows	Specifications	Overall dimension	Bottom box size
GYB4-4	1	4	176X170X105	146X150X95
GYB4-6	1	6	212X170X105	182X150X95
GYB4-8	1	8	248X240X105	218X220X95
GYB4-10	1	10	284X240X105	254X220X95
GYB4-12	1	12	320X240X105	290X220X95
GYB4-15	1	15	374X240X105	344X220X95
GYB4-18	1	18	428X240X105	395X220X95
GYB4-20	1	20	464X240X105	434X220X95
GYB4-24/1	1	24	536X240X105	506X220X95
GYB4-24/2	2	24	320X420X105	290X400X95
GYB4-30	2	30	374X420X105	344X400X95
GYB4-36	2	36	428X420X105	398X400X95
GYB4-40	2	40	464X420X105	434X400X95
GYB4-45	3	45	374X600X105	344X580X95
GYB4-54	3	54	428X600X105	398X580X95
GYB4-60	3	60	464X600X105	434X580X95

Dimensions and specifications of surface installation

Product model	Rows	Specifications	Overall dimension	Bottom box size
GYB4-4M	1	4	176X170X105	146X150X95
GYB4-6M	1	6	212X170X105	182X150X95
GYB4-8M	1	8	248X240X105	218X220X95
GYB4-10M	1	10	284X240X105	254X220X95
GYB4-12M	1	12	320X240X105	290X220X95
GYB4-15M	1	15	374X240X105	344X220X95
GYB4-18M	1	18	428X240X105	395X220X95
GYB4-20	1	20	464X240X105	434X220X95
GYB4-24/1M	1	24	536X240X105	506X220X95
GYB4-24/2M	2	24	320X420X105	290X400X95
GYB4-30M	2	30	374X420X105	344X400X95
GYB4-36M	2	36	428X420X105	398X400X95
GYB4-40M	2	40	464X420X105	434X400X95
GYB4-45M	3	45	374X600X105	344X580X95
GYB4-54M	3	54	428X600X105	398X580X95
GYB4-60M	3	60	464X600X105	434X580X95

GYB5

Metal box residential distribution box

GYB5 series terminal distribution box adopts fire retardant ABS, transparent cover is PC, the bottom of the box is high-quality cold-rolled steel plate, the panel is processed by special process, and the imitation leather pattern shows the product grade and reflects the quality of life.

Integrated
Pioneer
Connection
Unlimited

The distribution box is a distribution box with plastic cover and metal box, mainly used for

- Power distribution system: electrical installation, supporting and house renovation and decoration of building electrical power distribution system.
- Installation method The metal box is matched with the plastic cover, which is especially suitable for the concealed installation of the distribution box in the construction and decoration works.
- Stylish appearance design is suitable for high-end residential buildings, hotels, office buildings and other places that show modern life taste.
- The products that meet the standards have first obtained 3C certification and meet the standards of GB17466.1 and GB17466.24

Dimensions and specifications of concealed installation

Product model	Rows	Specifications	Overall dimension	Bottom box size
GYB5-9	1	9	240X200X95	217X180X75
GYB5-12	1	12	295X230X95	270X210X75
GYB5-16	1	16	366X230X95	340X210X75
GYB5-20	1	20	438X230X95	412X210X75
GYB5-24	2	24	295X395X95	268X375X75
GYB5-32	2	32	366X395X95	340X375X75
GYB5-40	2	40	438X395X95	412X375X75
GYB5-48	3	48	366X690X95	340X670X75
GYB5-60	3	60	438X690X95	412X670X75

Dimensions and specifications of surface installation

Product model	Rows	Specifications	Overall dimension	Bottom box size
GYB5-9M	1	9	240X200X95	240X200X75
GYB5-12M	1	12	295X230X95	295X230X75
GYB5-16M	1	16	366X230X95	366X230X75
GYB5-20M	1	20	438X230X95	438X230X75
GYB5-24M	2	24	295X395X95	295X395X75
GYB5-32M	2	32	366X395X95	366X395X75
GYB5-40M	2	40	438X395X95	438X395X75
GYB5-48M	3	48	366X690X95	366X690X75
GYB5-60M	3	60	438X690X95	438X690X75

GYM1

Metal box residential distribution box

Enjoy creativity and born extraordinary; the LVYM1 two-color residential distribution box is launched to convey human care in every detail, achieving exquisite and luxurious aesthetics. The golden ratio of two-color matching perfectly with any home designs.

Integrated
Pioneer
Connection
Unlimited

The distribution box is a distribution box with plastic cover and metal box, mainly used for

- Power distribution system: electrical installation, supporting and house renovation and decoration of building electrical power distribution system.
- Installation method The metal box is matched with the plastic cover, which is especially suitable for the concealed installation of the distribution box in the construction and decoration works.
- Stylish appearance design is suitable for high-end residential buildings, hotels, office buildings and other places that show modern life taste.
- The products that meet the standards have first obtained 3C certification and meet the standards of GB17466.1 and GB17466.24

Dimensions and specifications of concealed installation

Product model	Specifications	Overall dimension	Bottom box size
GYM1-8	8	222X210X100	196X190X85
GYM1-12	12	294X210X100	268X190X85
GYM1-16	16	366X210X100	340X190X85
GYM1-20	20	438X210X100	412X190X85
GYM1-24	24	294X335X100	268X315X85
GYM1-32	32	366X335X100	340X315X85
GYM1-40	40	438X335X100	412X315X85
GYM1-16D	16	366X230X100	340X210X85
GYM1-20D	20	438X230X100	412X210X85

Dimensions and specifications of surface installation

Product model	Specifications	Overall dimension	Bottom box size
GYM1-8M	8	222X210X100	222X210X85
GYM1-12M	12	294X210X100	294X210X85
GYM1-16M	16	366X210X100	366X210X85
GYM1-20M	20	438X210X100	438X210X85
GYM1-24M	24	294X335X100	294X335X85
GYM1-32M	32	366X335X100	366X335X85
GYM1-40M	40	438X335X100	438X335X85
GYM1-16DM	16	366X230X100	366X230X85
GYM1-20DM	20	438X230X100	438X230X85

GYX1-02

Glass panel smart home multimedia box

To infuse the soul into every detail, Geya innovates the information box of large flat glass panel; The passionate work of the artist is committed to reproducing pure texture combined with cutting-edge technology, absorbing inspiration from nature, allowing each eye to freeze and enjoy a wonderful and colorful warm life.

Integrated
Pioneer
Connection
Unlimited

The distribution box is a distribution box with plastic cover and metal box, mainly used for

- Power distribution system: electrical installation, supporting and house renovation and decoration of building electrical power distribution system.
- Installation method The metal box is matched with the plastic cover, which is especially suitable for the concealed installation of the distribution box in the construction and decoration works.
- Stylish appearance design is suitable for high-end residential buildings, hotels, office buildings and other places that show modern life taste.
- The products that meet the standards have first obtained 3C certification and meet the standards of GB17466.1 and GB17466.24

Product model	Overall dimension	Bottom box size
GYX1-02	430X330X140	400X300X120
GYX1-02H	430X330X140	400X300X120

GYX1-08

Optical fiber home box

Before the emergence of optical fiber box, the planning, implementation and management of a residential cabling system would usually be a mess. With the concept of optical fiber box as the network center, all the equipment would be added, the function would be canceled and modified easily. Changing the application path of a specific port would no longer be a disaster

Integrated
Pioneer
Connection
Unlimited

The distribution box is a distribution box with plastic cover and metal box, mainly used for

- Power distribution system: electrical installation, supporting and house renovation and decoration of building electrical power distribution system.
- Installation method The metal box is matched with the plastic cover, which is especially suitable for the concealed installation of the distribution box in the construction and decoration works.
- Stylish appearance design is suitable for high-end residential buildings, hotels, office buildings and other places that show modern life taste.
- The products that meet the standards have first obtained 3C certification and meet the standards of GB17466.1 and GB17466.24

Product model	Overall dimension	Bottom box size
GYX1-08	325X275X140	300X250X120
GYX1-08C	375X325X140	350X300X120
GYX1-08D	425X328X140	400X300X120

DBSF

DBSF series distribution box (hereinafter referred to as the distribution box) is mainly composed of casing and modular terminal apparatus, suitable for ac 50/60Hz, rated voltage of 230v, the load current is less than 100 a single-phase three-wire terminal of the circuit, as to control the power distribution, electrical equipment, at the same time also on line overload, short circuit, leakage protection.

Integrated
Pioneer
Connection
Unlimited

IEC/EN 61439-3

Technical Data

Standard	IEC/EN 61439-3
Insulation voltage Ui	500V
Rated voltage Ue	230/400V
Rated current In	100A
Dielectric test voltage at and ind. Freq. for 1min	2500/1min
Enclosure protection class	Ip30
Work back to the way	3、5、10、14、18

Overall shape and installation dimensions

Model	L	W	H1	H2
DBS-3	102±1.5	186±1.5	94.5±1.5	119±1.5
DBS-5	138±1.5	186±1.5		
DBS-10	256±1.5	250±1.5		
DBS-14	328±1.5	250±1.5		
DBS-18	400±1.5	250±1.5		

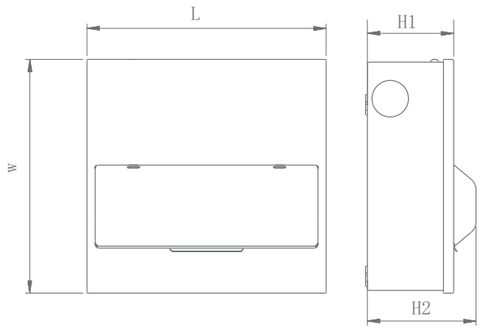

Shape and Dimension Diagram of Base

Model	L	W	H
DBSF-2	52±1.5	130±1.5	61.5±1.5
DBSF-4	98±1.5	182±1.5	93.3±1.5
DBSF-6	134±1.5	182±1.5	
DBSF-10	256±1.5	250±1.5	
DBSF-14	328±1.5	250±1.5	
DBSF-18	400±1.5	250±1.5	

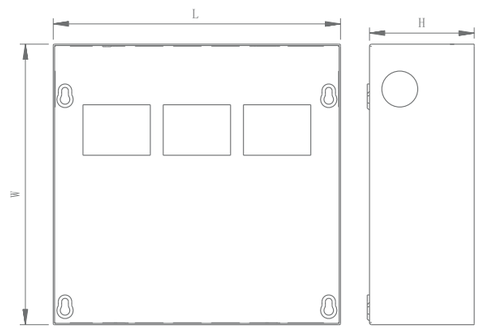

GYHT

Optical fiber home box

The bottom shell and face frame are made of ABS new material, and the transparent cover is made of PC new material, which has the characteristics of good toughness, high strength, good impact resistance and long service life. It is applicable to various outdoor and indoor places such as waterproof, dustproof and anti-corrosion

Integrated
Pioneer
Connection
Unlimited

IP65 protection class
The surface cover and bottom shell are wrapped by waterproof sealing strips, which has better waterproof performance.
Latch structure
The lock catch of face frame and face cover is thickened, and the structure is more reliable
Cover hinge structure
1. Opening angle of face cover ≥ 115 °;
2. The cover can be fixed at the maximum opening angle;
3. Face cover closing and closing life ≥ 500 times"
Accessory bag installation package
Φ 6 * 30 plastic expansion pipe+self-tapping screw
With circuit baffle
The left and right sides of the face frame are equipped with circuit baffles, which have partial filling function and are easy to remove
Loose frame structure
1. Fixing the face frame is a non-loosening screw. After loosening the face frame, the screw will not be missed
2. The fixing screw is on the outside of the waterproof strip, and the water resistance of the position hole is better
Multi-ring knockout hole
Knock down the surface of the hole and engrave letters to facilitate the selection of cable connector specifications, and reserve the positioning hole for the hole opener
Copper terminal assembly
The terminal block can pass the 960 ° glow wire test with guaranteed safety performance

Dimension diagram

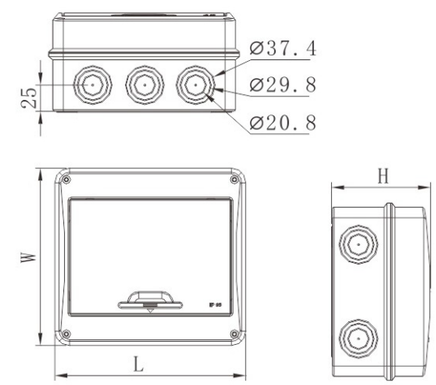

Data Summary of Surface Waterproof Distribution Box

Model and name	Rows	Overall dimension	Zero and ground bar configuration	Outer box size	Gross weight of the whole case	Number of boxes (pcs.)
GYHT-5	Single row	129X170X95	Zero row:3 holes ; Ground platoon:3 holes	555X365X520	18.2	40
GYHT-8	Single row	183X170X95	Zero row:5 holes ; Ground platoon:5 holes	520X3X90X545	17.8	30
GYHT-12	Single row	255X200X105	Zero row:8 holes ; Ground platoon:8 holes	520X425X540	18	20
GYHT-15	Single row	309X200X105	Zero row:8 holes ; Ground platoon:8 holes	625X460X430	17.3	16
GYHT-18	Single row	363X200X110	Zero row:8 holes ; Ground platoon:8 holes	575X383X430	12.6	10
GYHT-24	Double row	272X350X110	Zero row: two 8 holes ; Ground platoon: two 8 holes	595X380X574	16.6	10

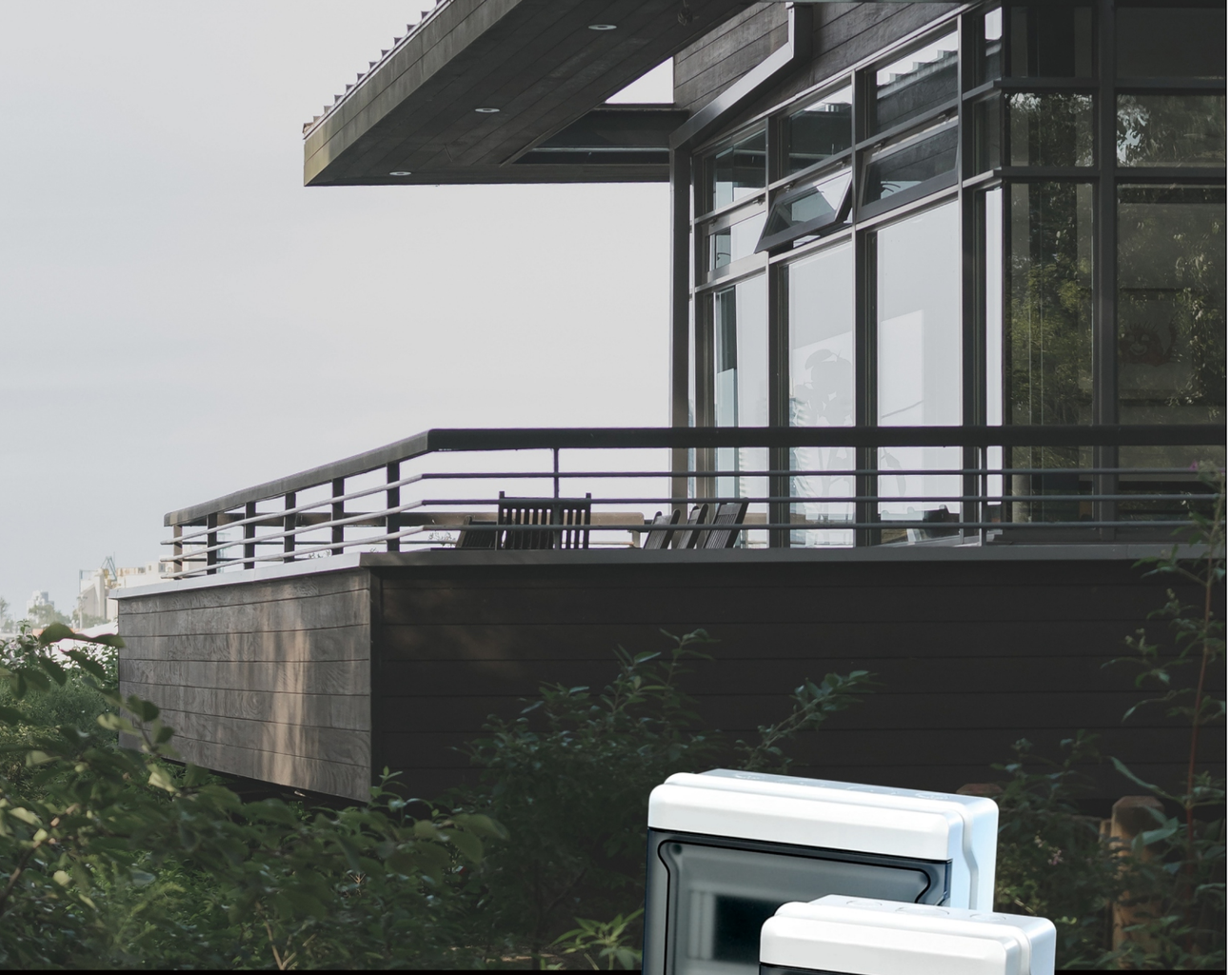

GYAT

Optical fiber home box

The bottom shell and face frame are made of ABS new material, and the transparent cover is made of PC new material, which has the characteristics of good toughness, high strength, good impact resistance and long service life.
It is applicable to various outdoor and indoor places such as waterproof, dustproof and anti-corrosion

Integrated
Pioneer
Connection
Unlimited

IP65 protection class
The surface cover and bottom shell are wrapped by waterproof sealing strips, which has better waterproof performance.
Latch structure
The lock catch of face frame and face cover is thickened, and the structure is more reliable
Reserved function sticker position
The function sticker position is reserved on the face frame. After the function sticker is pasted, the control area of the components can be clearly viewed
Latch function
Reserved for installing anti-theft lock
With circuit baffle
The left and right sides of the face frame are equipped with circuit baffles, which have partial filling function and are easy to remove
Loose frame structure
1. Fixing the face frame is a non-loosening screw. After loosening the face frame, the screw will not be missed
2. The fixing screw is on the outside of the waterproof strip, and the water resistance of the position hole is better
Multi-ring knockout hole
Knock down the surface of the hole and engrave letters to facilitate the selection of cable connector specifications, and reserve the positioning hole for the hole opener
Copper terminal assembly
The terminal block can pass the 960 ° glow wire test with guaranteed safety performance

Dimension diagram

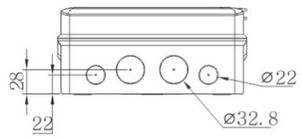

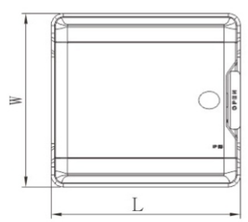

Data Summary of Surface Waterproof Distribution Box

Model and name	Rows	Overall dimension	Zero and ground bar configuration	Outer box size	Gross weight of the whole case	Number of boxes (pcs.)
GYAT-4	Single row	128X200X100	Zero row:3 holes ; Ground platoon:3 holes	545X425X555	21.5	40
GYAT-6	Single row	164X200X100	Zero row:5 holes ; Ground platoon:5 holes	545X425X530	17.8	30
GYAT-9	Single row	218X200X100	Zero row:8 holes ; Ground platoon:8 holes	545X425X465	16.2	20
GYAT-12	Single row	272X230X105	Zero row:8 holes ; Ground platoon:8 holes	570X460X490	17.6	16
GYAT-18	Single row	380X230X110	Zero row:8 holes ; Ground platoon:7 holes	595X400X490	15.5	10
GYAT-24	Double row	272X370X110	Zero row: two 8 holes ; Ground platoon: two 7 holes	595X390X575	19.2	10

GYSH

Waterproof distribution box

Integrated
Pioneer
Connection
Unlimited

High-end distribution box, Overall panel design is luxury and attractive.
The material is PC which makes it really resistant, fireproof and UV protection.
Fixed frame, simple structure, and easy to install.
It is applicable for special waterproof, dustproof and corro-sion-proof locations
Executive standard IEC60529 EN60309 IP65

SH4PN

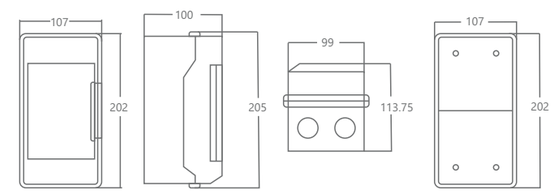

SH6PN

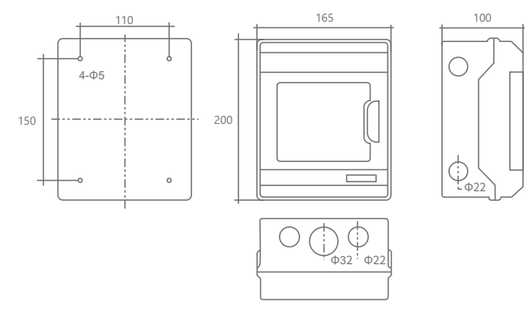

Integrated
Pioneer
Connection
Unlimited

SH9PN

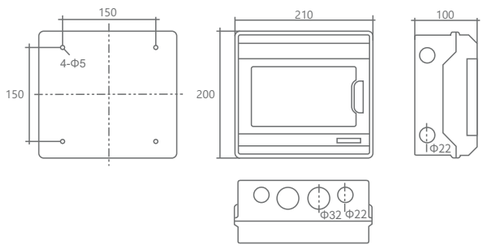

SH12PN

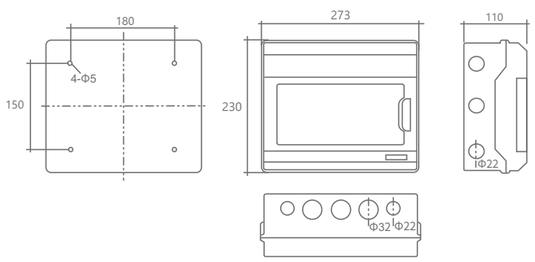

SH18PN

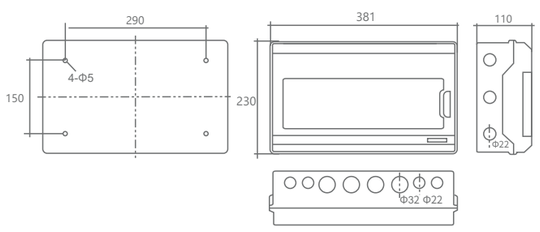

SH24PN

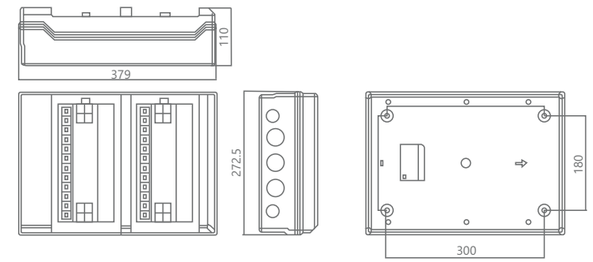

SH36PN

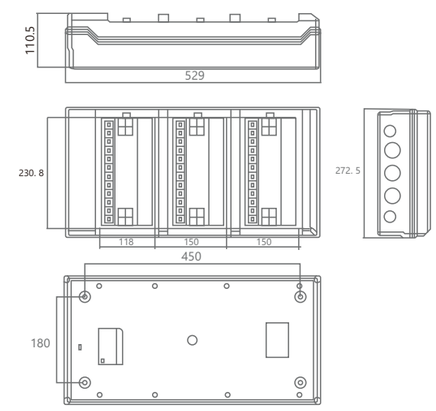

GYHA

Water proof distribution box

HA Series lighting box is in line with IEC-493-1 standard, attractive and durable, safe and reliable, which is widely used in various places such as factory, mansion, residence, shopping center and so on.

Integrated
Pioneer
Connection
Unlimited

Features

Panel is the ABS material for the engineering, high strength, never change color, the transparent material is PC.

Cover push-type opening and closing

Face covering of the distribution box adopts the push-type opening and closing mode, the face mask can be opened by pressing lightly, the self-locking positioning hinge structure is provided when opening.

Wiring design of the power distribution box

The guide rail support plate can be lifted to the highest movable point, it is no longer limited by the narrow space when installing the wire. To install easily, the switch of the distribution box is set up with the wire groove and wire pipe exit-holes, which are easy to use for a variety of wire grooves and wire pipes.

Product size

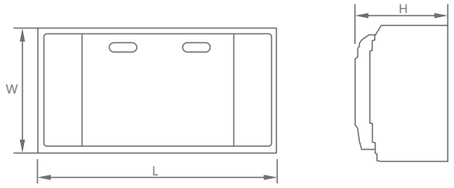

Product model	Dimensions		
	L	W	H
HA-4P	143	210	100
HA-8P	215	210	140
HA-12P	298	260	140
HA-18P	410	285	140
HA-24P	298	420	140
HA-36P	298	570	140

GYFZ

Water proof distribution box

Metal consumer unit includes SPN and TPN series. SPN series are suitable for single phase circuits and wildly used in residential area. TPN series are suitable for three phase circuits and used to protect machines in industrial area.

Integrated
Pioneer
Connection
Unlimited

Technical specifications

Range: SPN & TPN-4, 6, 8, 12ways
Color: Pearl Ivory & Regal Gray
Certification: IEC61439-3
Features: Compact DBs which occupy minimum space

Models

Model Metal Box	2P 100A Isolator	1P 6A MCB	1P 16A MCB	1P 20A MCB	1P 25A MCB	1P 32A MCB
SPN 4way	1 pcs	1 pcs	1 pcs	1 pcs	-	1 pcs
SPN 6way	1 pcs	2 pcs	1 pcs	1 pcs	-	2 pcs
SPN 8way	1 pcs	2 pcs	1 pcs	2 pcs	-	3 pcs
SPN 12way	1 pcs	3 pcs	3 pcs	2 pcs	-	4 pcs
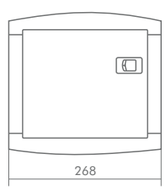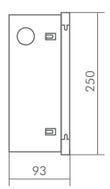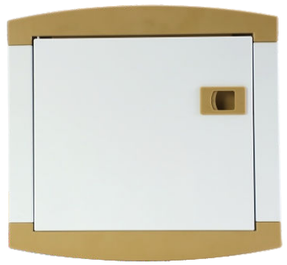
Model Metal Box	2P 100A Isolator	1P 6A MCB	1P 16A MCB	1P 20A MCB	1P 25A MCB	1P 32A MCB
TPN 4way	1 pcs	2 pcs	2 pcs	4 pcs	-	4 pcs
TPN 6way	1 pcs	3 pcs	4 pcs	5 pcs	-	6 pcs
TPN 8way	1 pcs	4 pcs	6 pcs	7 pcs	-	7 pcs
TPN 12way	1 pcs	6 pcs	8 pcs	10 pcs	-	12 pcs