C-Lin
欣灵电气股份有限公司
XINLING ELECTRICAL CO.,LTD.

Address: No. 328, Shijiu Road, Yueqing Economic Development Zone, Zhejiang Province
Hotline: 0577-62735555
Fax: 0577-62722963
Website: http://www.xinling.com
Email: C-Lin@xinling.com
Technical Support Hotline: 400 1663 188

RECYCLABLE

Zhejiang Famous Trade Name National High-Tech Enterprise

C-Lin 欣灵

使用说明书
Products Instructions

XLCPS1

Series Control and Protective Switching Devices

Thank you very much for using C-Lin brand Control and Protective Switching Devices. Please read the user manual before using the product!

31A005E0

Contents

Overview ……1

Normal Operating Conditions ……2

Model Designations and Their Meanings ……2

Main Technical Specifications ……3

Operation and Setup ……5

Product Application ……8

Basic Electrical Control Diagrams ……11

Notes and Warnings ……13

Ordering Information ……13

Warranty and After-Sales Service ……13

I. Overview

1.1 Product and Application

The XLCPS Series Control and Protective Switching Device (CPS) (hereinafter referred to as the "switch") is mainly used in circuits with AC 50Hz (60Hz), rated operating voltage up to 690V, rated operating current from 1A to 125A, controller setting current from 0.4A to 125A, and controlled motor power from 0.12kW to 55kW. It can make, carry and break currents under normal conditions (including specified overload conditions), and also make, carry for a certain time and break currents under specified abnormal conditions (such as short circuit).

The switch adopts a modular integrated structure, integrating the main functions of circuit breakers, contactors, overload relays, starters, isolators and other products. It supports remote automatic control and local direct manual control modes, is equipped with panel indication and electromechanical signal alarm functions, and has overvoltage, undervoltage, phase loss and phase failure protection functions.

Featuring small size and high reliability, the switch also offers high short-circuit breaking capacity and short arcing distance. It incorporates characteristics such as inverse-time overload long delay, short-circuit short delay, instantaneous short-circuit protection and fast short-circuit protection. By selecting optional functions as required, it can provide comprehensive and reliable protection for various motor starting/control circuits and power distribution circuits, with accurate operation.

The XLCPS1 series products are mainly composed of a molded case, electromagnetic transmission mechanism, operating mechanism, main circuit contact group, intelligent release and auxiliary contacts. They enable local or remote closing and opening of circuits.

The XLCPS1 series switches are widely applicable to the following scenarios and systems:

- ●Power distribution and motor protection & control systems in iron and steel, petrochemical, mining, port, transportation and other industries
- ●Power distribution and motor protection & control systems in large venues such as urban streets, hospitals, schools, cultural and sports centers, and commercial centers
- ●Power distribution and motor protection & control systems in data communication, water supply and drainage, fire protection and other systems
- ●Power distribution and motor protection & control systems in commercial/residential buildings, infrastructure and other constructions
- ●Motor control centers (MMC) and power distribution centers of various organizations
- ●Power distribution and lighting circuits to provide circuit control and protection
- ●Building fire protection systems to control and protect circuits for fire pumps, fire fans, etc.
- ●Control and protection of power distribution circuits and motors in various professional equipment

1.2 Product Compliance Standards

IEC 60947-6-2: Low-voltage switchgear and controlgear - Part 6: Multiple function equipment - Section 2: Control and protective switching devices

GB 14048.9: Low-voltage switchgear and controlgear - Multiple function equipment (devices) - Part 2: Control and protective switching devices (equipment)

XLCPS1 schematic symbol:

II. Normal Operating Conditions

■Ambient Air Temperature
The upper limit shall not exceed +40℃; the lower limit shall not be lower than -5℃; the daily average shall not exceed +35℃. If the ambient air temperature exceeds this range, the user shall consult with the manufacturer.
■The altitude of the installation site shall not exceed 2000 meters. If exceeded, the product shall be selected according to the altitude correction factor.
■Atmospheric Conditions
At an ambient air temperature of +40℃, the relative humidity of the atmosphere shall not exceed 50%; higher relative humidity is permissible at lower temperatures. When the monthly average minimum temperature is +25℃, the monthly average maximum relative humidity is 90%. Measures must be taken to prevent condensation on the product due to temperature changes.
■Pollution Degree: 3
■Installation Category: III

III. Model Designation and Its Meaning

XL CPS 1 —[1][2] / [3][4] / [5][6][7]

XL: Enterprise Code
CPS: Control and Protective Switching Device (CPS)
1: Design Serial Number

[1]: Frame Size Rated Current Inm (A): 45, 125
[2]: Breaking Capacity Code: C-15kA, Y-35kA
[3]: Load Type Code: M-Motor Protection, L-Power Distribution Protection
[4]: Rated Operating Current I? (A): 1, 3, 6, 12, 16, 25, 32, 45, 63, 80, 100, 125
[5]: Auxiliary Contact Block Code: 06-3 Normally Open, 2 Normally Closed + 1 Fault Trip + 1 Fault Alarm
[6]: Control Power Supply Voltage Code: M-230V, Q-400V
[7]: Optional Function Code: Basic Type (no code), F-Fire Protection Type, L-Earth Leakage Type, T-Communication Type, G-Isolation Type

IV. Main Technical Parameters

Table 1 Main Circuit Parameters

Item	XLCPS1-45								XLCPS1-125			
Rated Operating Voltage Ue (V)	400、690 /50Hz											
Rated Insulation Voltage Ui (V)	690								800			
Rated Impulse Withstand Voltage Uimp (kV)	4								6			
Conventional Heating Current Ith (A)	16					45			80		125	
Rated Operating Current Ie (A)	1	3	6	12	16	25	32	45	63	80	100	125
Utilization Category	AC-43, AC-44											
Pole Number	3P											

Table 2 Controller Setting Current

Frame Size	Rated Operating Current Ie (A)	Controller Rated Current Iet (A)	Overload Setting Current Ir1 Range (A)	Controllable Motor Power Pe (kW) (400V)
45	1	1	0.4～1	0. 12～0. 3
	3	3	1.2～3	0. 37～1. 2
	6	6	2.4～6	1. 0～2. 7
	12	12	4.8～12	2. 2～5. 5
	16	16	6.4～16	3. 0～7. 5
	25	25	10～25	5. 0～12
	32	32	12.8～32	6. 5～15
	45	45	18～45	9. 0～22
125	63	63	25～63	12～30
	80	80	40～80	22～37
	100	100	50～100	27～45
	125	125	63～125	35～55

Table 3 Operating Conditions of Control Electromagnet

Rated Control Supply Voltage Us	Conventional Operation	Operating Voltage Range
M: AC230V Q: AC400V	CPS Reliable Closing	(85%～110%)Us
	CPS Opening or Release	(20%～75%)Us

Table 4 Electrical Life

Item		XLCPS1-45	XLCPS1-125
Electrical Life (×10,000 cycles)	AC-43	100	30
	AC-44	3	2
Mechanical Life (×10,000 cycles)		1000	300
Duty Cycle (Intermittent Duty)		300, Load Factor 40%	120, Load Factor 25%

Figure 1 XLCPS1 Time-Current Operating Characteristic

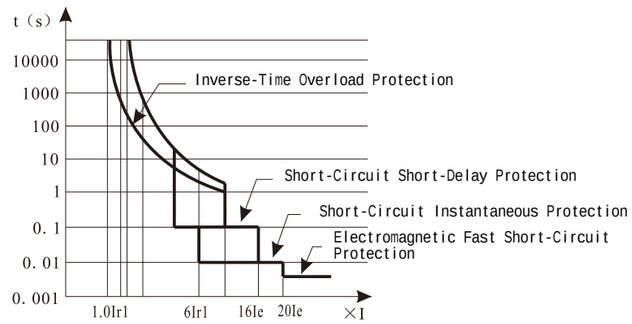

V. Operation and Settings

5.1 Functional Parameters and Factory Settings

The functional parameter settings of the intelligent controller (i.e., the protection characteristics of the XLCPS1 switch) are shown in Table 5.

Table 5 Functional Parameter Settings

Function	Parameter Setting	Delay Setting	Factory Default Value	User-Settable Parameter	Fault Status Output - Basic Type	
					Basic Type	Fire Protection Type
Overload Protection	(0.4～1)Ie	Protection Curve Code	F1	(0.4～1)Ie	Delayed Trip	Delayed Alarm
Short-Circuit Short-Delay Protection	(3～12)Ir+OFF	0.1～0.4s	8Ir/0.2s	(3～12)Ir+OFF	Delayed Trip	Delayed Alarm
Short-Circuit Instantaneous Protection	(6～16)In	<50ms	12In	(8～16)In	Instantaneous Trip	Trip + Alarm
Unbalance (Phase Loss, Phase Failure) Protection	(20%～80%)+OFF	1～40s	30%/10s	(20%～80%)+OFF	Delayed Trip	Delayed Alarm (Trip)
Undercurrent Protection	(0～0.8)Ir+OFF	1～60s	OFF	(0～0.8)Ir+OFF	Delayed Trip	Delayed Alarm (Trip)
Undervoltage Protection	(154V～198V)+OFF	1～30s	187V/10s	(154V～198V)+OFF	Delayed Trip	Delayed Alarm (Trip)
Overvoltage Protection	(230V～286V)+OFF	1～30s	253V/10s	(230V～286V)+OFF	Delayed Trip	Delayed Alarm
Start Delay	(0～99s)+OFF	0～99s	3s	(0～99s)+OFF	During start delay, some protection functions are masked; instantaneous trip for short-circuit, etc.	
Residual Current Protection	(30～500mA)+OFF	0.1～1s	0.1s	(30～500mA)+OFF	Trip	Alarm
Note: Communication and residual current protection are optional functions for specific models. Communication products use RS485 communication lines, an RJ45 interface, and the Modbus protocol.						
Overload Protection Setting Curves (1.5Ir1 Operating Time, s): F1 (52), F2 (96), F3 (140), F4 (210)						

5.2 Controller Panel Description

Before powering on the XLCPS1, you must first set the long-delay and short-delay setting currents to the required values according to the load current of the circuit being controlled and protected. After power-on, the digital tube lights up, displaying the auxiliary current and voltage values, and cyclically showing the monitored operating current values of the three-phase A, B, and C circuits.

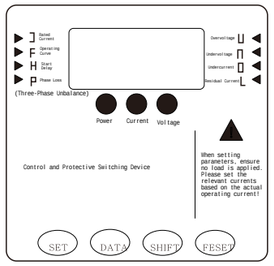

SET Key: When the load is not running, press this key to enter the parameter setting mode.
DATA Key: Modifies the flashing digit, with a step of 1 (cycles between 0 and 9).
SHIFT Key: Selects the digit to be set in the setting mode; the selected digit will flash.
RESET Key: After parameter setting is completed, press this key to save the parameters and switch to the monitoring and operating mode.

5.3 Operation

After the XLCPS1 is connected to the working power supply, the LED displays the voltage value, allowing it to double as a voltmeter, with the last three digits showing the voltage reading.
During operation, the XLCPS1 can also function as an ammeter, cyclically displaying the operating status of three-phase currents. Press the SHIFT key to selectively display the operating current of Phase A, Phase B, Phase C, or residual current (L); press the RESET key to resume the cyclic display of three-phase currents.
Fault Inquiry: Operate the XLCPS1 under no-load, then press the DATA key. By cross-referencing with the fault type symbols on the panel, you can check the last fault type. When the voltage value is displayed, it indicates that the XLCPS1 has exited fault inquiry and entered normal monitoring operation; alternatively, restart the XLCPS1 to exit fault inquiry.

5.4 Protection Parameter Setting

When the motor is starting or running, pressing the SET key will have no effect. When operating under no-load, press the SET key to select the setting type, then press the SHIFT key in turn to select the digit position, and press the DATA key to modify the data. After completing the setting of a parameter, press the SET key again to enter the next setting state until all settings are finished; skip the settings for unnecessary options. After all parameters are set, press the RESET key to exit the setting state, save the settings, and display the voltage value.

Operation Sequence	Display Content	Code Definition	Setting Range	Default Display
Press SET key 1st time	⅃ 000	Long-Delay Setting Current	(0.4～1)Ie	Customer Requirement
Press SET key 2nd time	H 05	Start Delay Time	0～99s	3s
Press SET key 3rd time	F	Overload Inverse-Time Protection Curve Number	Select from 1~4 range	F1
Press SET key 4th time	P 30	Three-Phase Unbalance Current Percentage	(20%～80%)+OFF	30%
Press SET key 5th time	u	Overvoltage Value	(230V～286V)+OFF	253V
Press SET key 6th time	n	Undervoltage Value	(154V～198V)+OFF	187V
Press SET key 7th time	L	Residual Current Code	Select from 0~8 range	Customer Requirement
Press SET key 8th time	o	Undercurrent Value	(0～0.8)Ir+OFF	OFF

5.5 Fault Inquiry

Press the DATA key once, and the display will show the last fault type.

Menu Display	Fault Type	Fault Parameter
⅃ 67.5	Overload	Current 67.5A
⅃ 483	Short-Circuit Short-Delay	Current 483A
⅃ 650	Short-Circuit Instantaneous	Current 650A
P 100	Phase Loss	Phase Loss

Menu Display	Fault Type	Fault Parameter
P 38	Three-Phase Unbalance	38%
o 15	Undercurrent	Current 15A
u 268	Overvoltage	Voltage 268V
n 180	Undervoltage	Voltage 180V
Return		

5.6 Operating Handle (Panel Description)

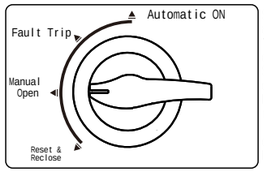

Switch to AUTO (Automatic Control Position): The switch's control electromagnet coil is energized, enabling remote automatic control by switching the control power supply on and off.
TRIP (Fault Trip): When a fault causes a trip, the switch mechanism trips, the main contacts open, and the electromagnet coil circuit is disconnected.
Switch to OFF (Manual OFF Position): For manual operation, the electromagnet coil is de-energized, and the main contacts of the switch remain in the open position.
RESET (Reset & Reclose): Rotate the operating knob to reset a freely tripped switch mechanism to its normal state and reclose it.
Isolation State: Pull out the isolation plug and lock it to place the product in the open isolation state; the handle cannot be operated.
Note: Isolation-type CPS is equipped with an isolation handle; the basic type has no isolation components.

VI. Product Operation

Before installation, check that the operating knob moves normally and is in the open position:
AUTO: The main circuit is energized.TRIP: Free trip position, triggered by a line fault. The switch can only be operated after qualified personnel have cleared the fault.OFF: The main circuit is open. A freely tripped switch can only be reset and reclosed by rotating the operating knob to the RESET (Reset & Reclose) position.
Before installation and use, carefully verify that the power supply voltage of the coil and accessories matches both the product specifications and the actual control circuit.
When the coil is supplied with (85%~110%) of the rated voltage (Us), rotating the operating knob to "AUTO" will securely energize the electromagnet, and rotating it to "OFF" will securely de-energize it.
The operating current setting of the switch release is factory-configured, but can be adjusted according to actual requirements.
The switch provides protection against overload, phase loss/phase failure, overvoltage, and undervoltage, with alarm indication via indicator lights.
The XLCPS1 can continue operating after interrupting a short-circuit current, but an inspection and confirmation of its operating status is required.

6.1 Troubleshooting

No.	Fault Phenomenon	Fault Inspection	Troubleshooting
1	Power is connected, but the switch does not operate	① Check if the operating knob is in the "AUTO" position ② Check if the A1, A2 control power supply is normal	Rotate the operating knob to the "AUTO" position and correctly connect the control power supply
2	Power is connected, but the switch coil is burned	Check if the A1, A2 control power supply is short-circuited or incorrectly connected	Inspect the control circuit, or replace the switch
3	The switch does not latch	① Check the auxiliary latch contact ② Check the A1, A2 control power supply voltage	Correctly connect the auxiliary circuit; if there is a fault in the auxiliary circuit, replace the switch.
4	The switch is closed, but the motor does not operate	Check the power supply circuit and load	Repair the circuit and connect the power supply correctly.
5	The motor starts, but the switch trips	Check the state of the 95, 98 auxiliary circuit or the handle position, and identify the cause of the fault trip	Repair the load circuit (short circuit), adjust the load and switch parameters; or replace the switch.
6	The switch trips after the load has been running for some time	Check the switch intelligent controller protection, view the fault record, and inspect the circuit	Repair the circuit; adjust the parameters according to the load or replace the switch.
7	The motor is burned, but the switch did not trip	Check the switch parameter settings, view the fault record, and inspect the circuit	Reset the parameters according to the load, repair the circuit or replace the switch.

6.2 Switch Installation Diagram As Follows:

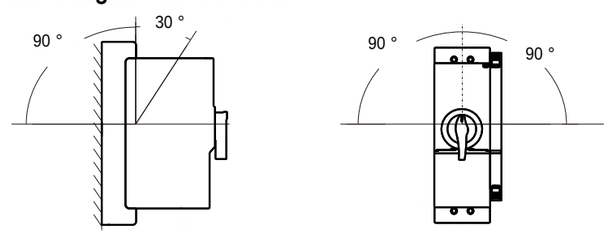

6.3 Outline and Installation Dimensions

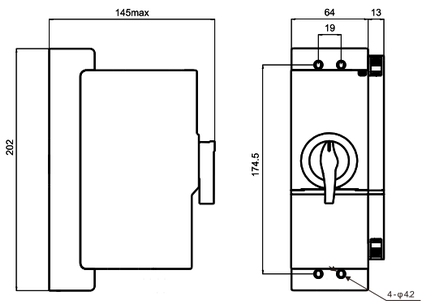

XLCPS1-45 Control and Protection Switch Device

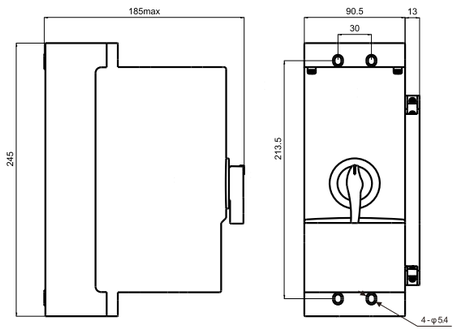

XLCPS1-125 Control and Protection Switch Device

VII. Basic Electrical Control Diagram

XLCPS1 Auxiliary Circuit Description

	Normally Open	Normally Open	Normally Closed	Normally Open	Normally Closed	a	b
Accessory	13 / 14	23 / 24	31 / 32	41 / 44	41 / 42	95 / 98	201 / 202
06 Accessory	√	√	√	√	√	√	√

Note：
Auxiliary a (95/98): Used as the fault trip signal port.
Auxiliary b (201/202): Used as the fire-fighting type fault alarm signal port.

Manual Panel + Local Control

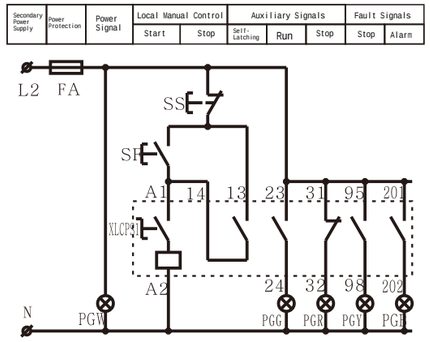

Note：This diagram is applicable to a single piece of equipment under normal operation, which is directly controlled locally by start/stop pushbuttons.

Manual Panel + Local Control + Remote Control

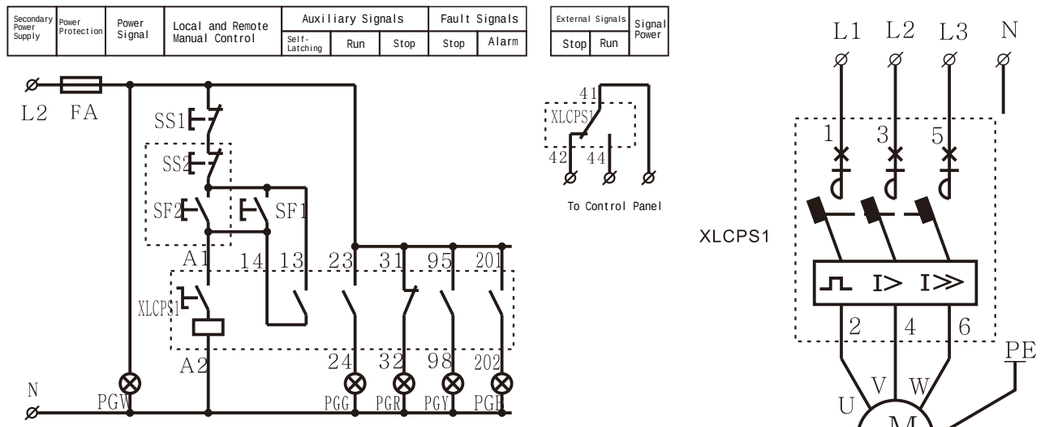

Note：This diagram is applicable to single motor-driven equipment under normal operation, which is controlled simultaneously by both local and remote means.

Ⅷ. Notes

When controlling a high-power motor (above 11kW), the user shall select an appropriate reduced-voltage starting method based on a comprehensive consideration of starting torque, current multiple, voltage drop, and circuit capacity. Generally, specifications require that the voltage reduction limit shall not exceed 80% of the rated value, and the starting current multiple shall be selected not to exceed (4~5) times, to ensure normal starting under appropriate load and reliable operation of the XLCP S1 electromagnet.
The exposed parts of the external connecting wires at the incoming and outgoing terminals of the switch shall be wrapped with insulating materials.
During transportation and storage, the product shall be protected from rain and snow. The storage environment shall meet the following conditions: daily average temperature at +25℃, relative humidity not exceeding 90%, and ambient temperature not higher than +40℃ and not lower than -5℃.

Ⅸ. Ordering Instructions

When selecting the XLCP S1 switch, the user shall specify the following contents, and may further indicate the service conditions or requirements if necessary:
Product name and model
Rated current of the switch, type and rated current of the intelligent controller
Control power supply voltage of the electromagnet coil
Required optional functions

Ⅹ. Warranty and After-Sales Service

This product is manufactured under a comprehensive quality management system. In the event of a malfunction, the following instructions are provided regarding the warranty period and after-sales service:
The switch shall be selected with a suitable specification and model according to design or actual requirements. For products that have not been used for a long time, attention shall be paid to moisture and dust prevention. Before use, maintenance and adjustment shall be carried out in accordance with the manual requirements, and the product can be put into operation only after it is confirmed to be normal.
Under compliance with storage and usage conditions, this product is covered by a three-package warranty within 12 months from the date of use (not exceeding 18 months from the date of shipment). During the warranty period, the user shall carry out adjustment, use and maintenance in accordance with the specified requirements of this product. If the product is damaged or cannot be used normally due to quality problems, our company will repair or replace it free of charge for the user.
For faults caused by the following reasons, even within the warranty period, paid repair or replacement shall be carried out: incorrect use, self-modification and improper maintenance; use exceeding the requirements of standards and specifications; damage caused by falling and installation; earthquakes, fires, lightning strikes, abnormal voltages, other natural disasters and secondary disasters, etc.