C-Lin
欣灵电气股份有限公司
XINLING ELECTRICAL CO.,LTD.
Address: No. 328, Weishi 19th Road, Yueqing Economic Development Zone, Zhejiang Province
Hotline: 0577-62735555 Fax: 0577-62722963
Http: http://www.c-lin.cn Email: C-Lin@xinling.com
Technical Service Hotline: 400 1663 188

RECYCLABLE

Zhejiang Province Famous Brand Trademark National High-Tech Enterprise

C-Lin 欣灵

使用说明书
Products Instructions

XLDQ3-63 Series

Series Automatic Transfer Switching Equipment

Thank you very much for using C-Lin Brand Automatic Transfer Switching Equipment. Please read the operation manual before using the product!

31A001E0

Contents

Precautions ……1

Installation Steps ……2

Random Accessories ……2

Product Identification ……3

Product Model Meaning ……3

Product Outline Drawing ……4

XLDQ3-63A/B Controller ……5

Wiring Diagram ……7

Inspection and Maintenance ……10

Precautions

Before performing any operations on this Automatic Transfer Switching Equipment (hereinafter referred to as ATSE), please read and understand these instructions.

⚠ DANGER

Please read and understand this manual before installing or operating the ATSE. Only qualified personnel are allowed to install, adjust, repair and maintain this ATSE.Many parts of this ATSE, including the printed circuit board, operate at line voltage. Do not touch these parts. Only use insulated tools.
Do not touch unprotected components or screws on live terminals.Before performing maintenance on ATSE circuits, the following protective measures should be taken:

- Disconnect all power sources.
- Place a “No Closing” sign on the switch.
- Lock the switch in the open position.

WARNING

Patented Product, Counterfeiting Will Be Prosecuted!

Line Voltage Mismatch: Before powering up and configuring the ATSE, ensure that the line voltage is within the power supply voltage range indicated on the ATSE nameplate. If the line voltage does not match the power supply voltage range, the ATSE may be damaged.Failure to follow the instructions may result in equipment damage.

Installation Steps

■Installation

◎ ATSE Delivery

Check and confirm whether the product is the same as the one you ordered.Remove the packaging of the ATSE and check for any damage during transportation.

◎ Check Voltage

Check and confirm that the voltage is within the working voltage range of ATSE.

◎ ATSE Installation

Install ATSE according to the instructions in this document.Install all external options.

◎ ATS Wiring

Connect the busbar.
Connect the control wires.

◎ Setting

Set the ATSE operating parameters according to the manual instructions based on the actual situation.

■Random Accessories

Serial Number			Remarks
(1)			
(2)			

Notes:
◯If any accessory is missing or damaged, please contact the manufacturer.
◯Please keep the operation manual properly for future operation.

Product Outline Drawing

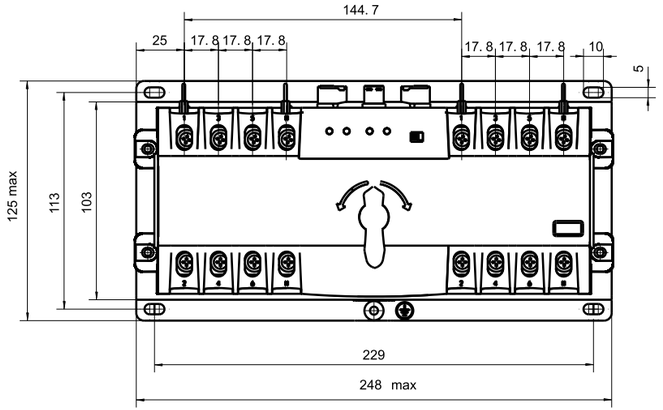

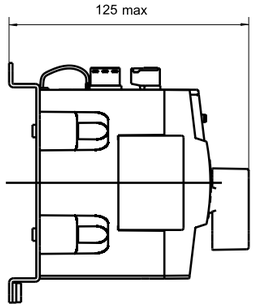

Controller XLDQ3-63A/B

This controller is a simple-type controller developed by our company to meet market demands. It features simple operation, applicable functions, and intuitive display.

■Controller Structure

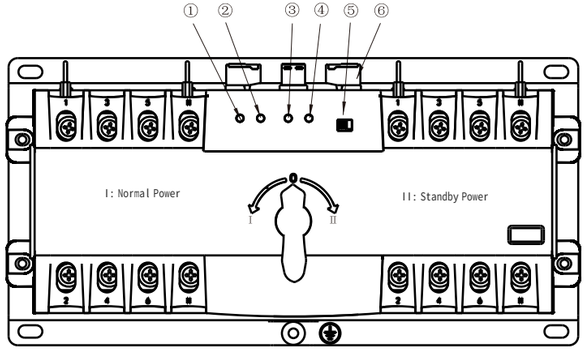

■Technical Parameters:
Operating Ambient Temperature: - 0°C ~ +60°C
Operating Power Supply Voltage Range: AC 230V
Power Consumption: ≤5W
Transfer Delay: 0.2 seconds
Return Delay: 0.2 seconds

①: Normal Power Indicator
②: Normal Power Closed Indicator
③: Standby Power Indicator
④: Standby Power Closed Indicator
⑤: Auto/Manual Conversion Mode Selection Switch
⑥: External Terminal

■Controller Characteristics and Functions

The automatic transfer switch determines whether to switch from one power source to another based on the voltage status of the working power supply and the working mode set by the user. Its functions depend on the configured controller. Its main functions and characteristics are shown in the following table:

Product Model	RDQ3-63A	RDQ3-63B
Working Power Supply	AC230V 50/60Hz	AC230V 50/60Hz
Installation Method	Integrated	Integrated
Working Positions	Two positions Ⅰ, Ⅱ	Three positions Ⅰ, Ⅱ, 0
Operation Mode	Automatic and Manual	Automatic and Manual
Generator Control	None	None
Fire-fighting Linkage Control	None	Yes (Driven by DC24V auxiliary power supply)
Transfer Mode	Automatic Switching and Restoration	Automatic Switching and Restoration
Transfer Delay Function	Fixed 2 seconds	Fixed 2 seconds
Return Delay Function	Fixed 2 seconds	Fixed 2 seconds

Wiring Diagram

Four-pole Wiring

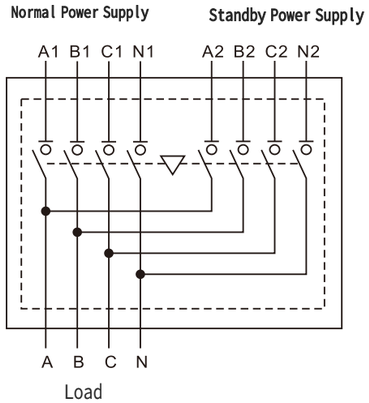

Three-pole Wiring

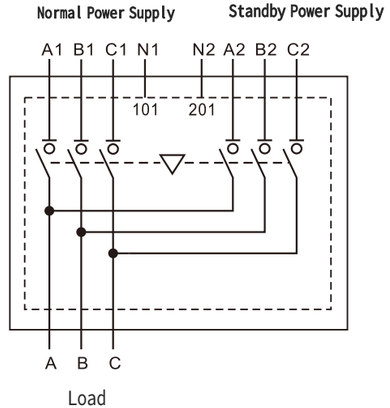

Notes:
1.The part outside the implementation box is for user wiring.
2.The neutral wire of the three-pole switch should be connected to the corresponding neutral port of the controller.

■Terminal and Wiring Instructions

Wiring Schematic

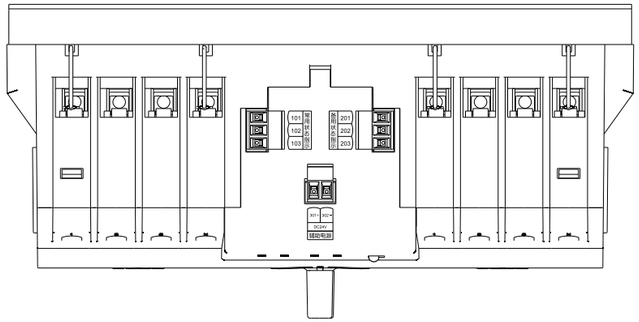

① 101~103 Signal Output for External Status Indicator of Normal Power Supply (AV230V 0.5A)
101- Common Neutral for Indicator Light (Neutral Inlet Port for Three-pole)
102- Normal Power Supply Signal Output
103- Normal Power Supply Closed Signal Output

② 201~203 Signal Output for External Status Indicator of Standby Power Supply (AV230V 0.5A)
201- Common Neutral for Indicator Light (Neutral Inlet Port for Three-pole)
202- Standby Power Supply Signal Output
203- Standby Power Supply Closed Signal Output

③ 301~302 Fire-fighting Function (After inputting DC24V auxiliary power supply, the switch converts to the double-open position. To restore the automatic conversion mode, just turn off the auxiliary power input.)
301+
302-
Note: Type A controller does not have this function.

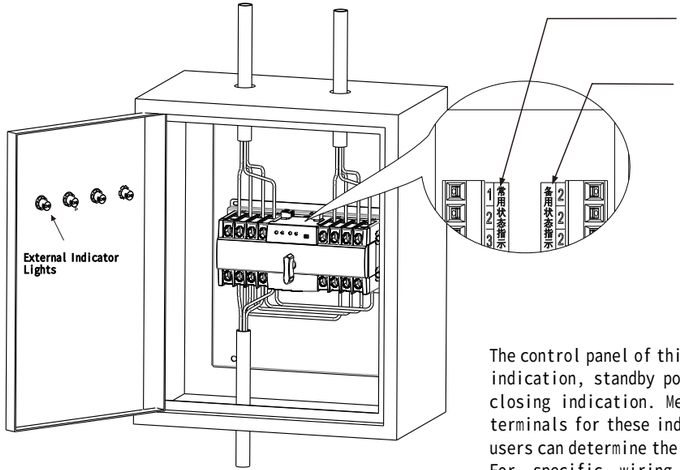

The control panel of this switch is equipped with normal power supply indication, standby power supply indication, and circuit breaker closing indication. Meanwhile, it also provides external output terminals for these indication signals (AC230V/0.5A, powered), and users can determine the external indicator lights as needed.
For specific wiring, please refer to the wiring terminal instructions of the corresponding controller.

Inspection and Maintenance

■ Inspection Before Power-On

After completing all steps of switch installation and wiring, it is recommended to inspect the installation to prevent errors.

- Please check whether the switch installation and wiring are correct. Especially check some main wiring terminals, such as power busbars.
- Whether the connection of external signal indicator lights is correct and whether there is a short circuit;
- Whether the busbar screws are tightened reliably;
- It is recommended to disconnect the load during the first power-on debugging.After performing the above inspections and confirming that there are no errors, the power can be turned on for debugging and use.

■ Operation

- Automatic Working Mode:
  During normal use, the auto/manual control switch should be set to the automatic position.In automatic control mode: The controller detects both the normal power supply and the standby power supply simultaneously. When the normal power supply fails and the standby power supply is normal, the ATSE automatically transfers the load from the normal power supply to the standby power supply; if the normal power supply returns to normal, the ATSE returns to the normal power supply.

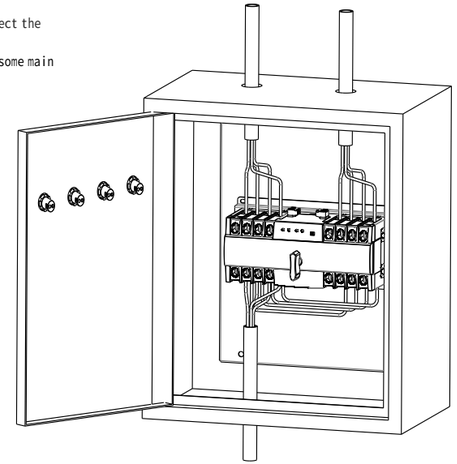

● Handle Operation Mode

When manual transfer is required under special circumstances, first set the auto/manual control switch to the manual position, then use the manual operating handle on the switch to manually transfer the switch.

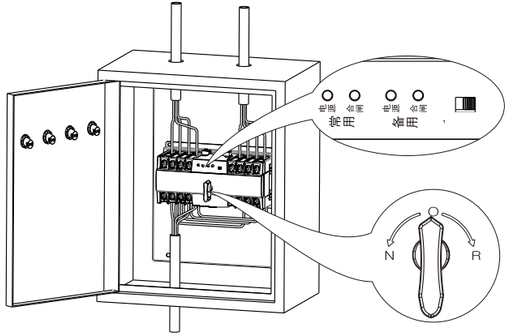

In manual control mode, turn the switch handle counterclockwise to switch to the normal power supply position; turn it clockwise to switch to the standby power supply position. When automatic switching is required, switch the auto/manual control switch back to the automatic position.

When a tripping fault occurs (the switch is in the closed position with normal power supply but no power output), first eliminate the load fault, then set the auto/manual control switch to the manual position, use the manual operating handle to switch the ATSE to the double-open position, and finally set the auto/manual control switch back to the automatic position. The switch will then return to the normal automatic operation state.

■ Fuse Replacement Method

① Press the solid oval position to release the buckle.
② Pull the controller upward for a certain distance.
③ Tilt and remove it in the direction shown in the diagram, locate the fuse, and replace it.

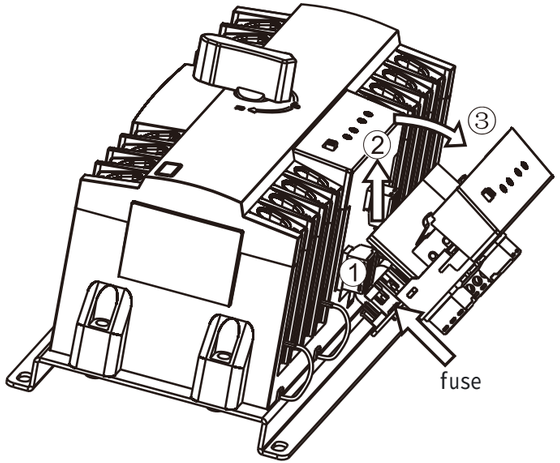

Note:
1.Fuse specification: 5×20, 2A
2.When replacing the fuse, be sure to ensure that the internal wiring is properly connected.
3.After replacement and correct inspection, install it in the reverse order of steps ②→①.

C-Lin
欣灵电气股份有限公司
XINLING ELECTRICAL CO.,LTD.
Address: No. 328, 19th Weilu Road, Yueqing Economic Development Zone, Zhejiang Province
Hotline: 0577-62735555 Fax: 0577-62722963
Website: http://www.c-lin.cn Email: C-Lin@xinling.com
Technical Support Hotline: 400 1663 188

RECYCLABLE

National High-Tech Enterprise Zhejiang Province Famous Trade Name

C-Lin 欣灵

使用说明书
Products Instructions

XLDQ3NX

Series Dual Power Automatic Transfer Switch

Thank you very much for using C-Lin automatic transfer switch equipment. Please read the user manual before using the product!

31A001E0

Contents

Precautions 1
Installation Steps 2
Standard Accessories 3
Product Identification 4
Product Model Explanation 5
Outline and Installation Dimensions 7
Installation Wiring 8
XLNX-A Type Controller 11
XLNX-B Type Controller 13
Operation 17
Troubleshooting and After-Sales Service 19

Precautions

Before performing any operations on this Automatic Transfer Switch Equipment (hereinafter referred to as ATSE), please read and understand these instructions.

⚠ DANGER

Before installing or operating the ATSE, please read and understand this manual thoroughly.
Only qualified professionals may install, adjust, repair, and maintain this ATSE.
Many components of this ATSE, including printed circuit boards, operate under live voltage and must not be touched. Only insulated tools may be used.
Do not touch unprotected components or screws on live terminal blocks.
Before performing maintenance on ATSE circuits, take the following protective measures:

-Disconnect all power supplies.

-Place a "DO NOT CLOSE" warning tag on the switch.

-Lock the switch in the open position.

WARNING

Patented Product, Counterfeiting Prohibited!
Before energizing and configuring the ATSE, ensure that the line voltage matches the power supply voltage range indicated on the ATSE nameplate.
If the line voltage does not conform to the power supply voltage range, the ATSE may be damaged.
Failure to follow the instructions may result in equipment damage.

■ Installation

◎ ATSE Delivery
Check and confirm that the product matches the one you ordered.
Remove the ATSE packaging and inspect for any damage incurred during transportation.

◎ Voltage Check
Check and confirm that the voltage matches the operating voltage range of the ATSE.

◎ Install the ATSE
Install the ATSE in accordance with the instructions in this document.
Install all external optional components.

◎ Wiring the ATS
Connect the busbars.
Connect the control wires.

◎ Configuration
Set the ATSE operating parameters according to the manual and actual conditions.

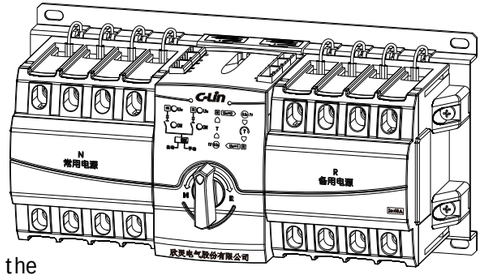

■Standard Accessories

No.	Name	Quantity	Remarks
(1)	Operation Manual	1 copy	
(2)	European-style Terminal Block	1 piece each	
(3)	European-style Terminal Block	1 piece each	Not included with Type A controller

(1)

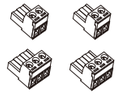

(2)

(3)

Notes:
●If any accessory is missing or damaged, please contact the manufacturer.
●Please keep the operation manual in a safe place for future operational use.

Product Identification

■ On the XLDQ3NX product, the following markings are present:

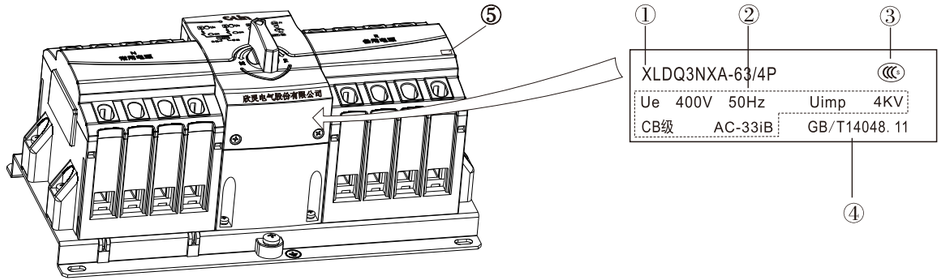

1.Product Model
2.Product Performance Parameters
3.Product Certification Marks
4.Executive Standard
5.Product Current Parameters

Product Model Explanation

■Product Model and Its Explanation

XLD Q 3 N X A □ 63 — 50 / 4 F

- F: R: Self-transfer and self-reset; S: Self-transfer and non-reset; F: Mains-Generator transfer
- 4: Number of Poles (2, 3, 4)
- 50: Rated Current of Circuit Breaker
- 63: Frame Size
- □: G: Custom type (high-performance, for professional applications); No code: Universal type
- A: Controller Model
  - A: Basic type (only supports self-transfer and self-reset integrated ATS)
  - **B: Intelligent type (digital display for voltage, engine start, fire linkage)**
  - C: Intelligent type (compatible with Type B functions, with Chinese LCD display)
  - D: Intelligent type (compatible with Type B functions, with communication capability)
- X: Circuit Breaker Specification
  - X: Miniature circuit breaker ≤63A (only basic controller can be installed)
  - M: Molded case circuit breaker ≥100A (A/B/C controllers can be optionally installed)
- N: Circuit Breaker Type
- 3: Design Serial Number
- Q: CB Class Dual Power Automatic Transfer Switch
- XLD: Enterprise Code

■Controller Features and Functions

The automatic transfer switch determines whether to switch from one power source to another based on the voltage status of the working power supply and the operating mode set by the user. Its functions depend on the configured controller. The controllers are available in two models, Type A and Type B, and their main functions and features are shown in the table below:

Feature	Type A Controller	Type B Controller
Operating Power Supply	AC85–280V 50/60Hz	AC85–280V 50/60Hz
Installation Method	Integrated	Integrated
Operating Position	Two operating positions	Three operating positions
Operation Mode	Automatic and Manual	Automatic and Manual
Generator Control	None	1 set of 5A relay dry contacts
Fire Alarm Interface	None	Passive contact input with 1 set of normally open passive signal feedback contacts
Transfer Mode	Auto-transfer & Auto-restore	Configurable for Auto-transfer & Auto-restore, Auto-transfer & Non-restore, and Utility-Generator mode
Transfer Delay Function	Fixed 0.2 seconds	Continuously adjustable from 0 to 30 seconds
Restore Delay Function	Fixed 0.2 seconds	Continuously adjustable from 0 to 30 seconds

Outline and Installation Dimensions

■ Outline Drawing of XLDQ3NX Series Products

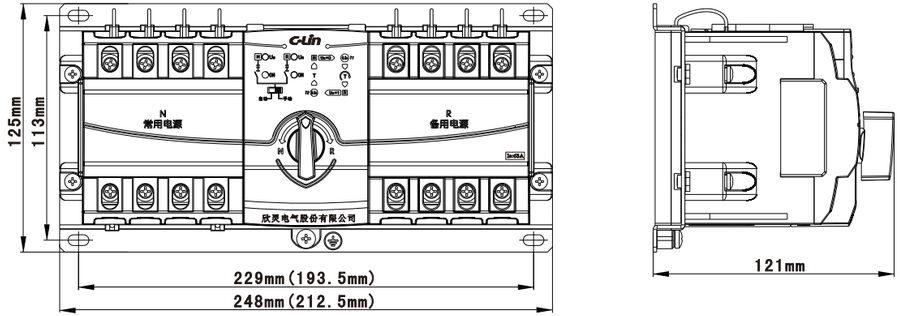

Note: The dimensions in parentheses in the drawing are for the three-pole switch.

Installation Wiring

■ Installation Steps for XLDQ3NX Series Products

① Fix the Switch Body
According to the outline dimensions of the ATSE provided by the manufacturer, drill four φ5mm round holes on the mounting plate of the switch cabinet, then secure the switch body with mounting screws.

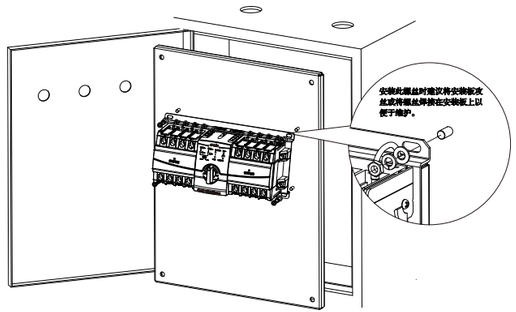

② Connect the Output Terminals
Based on the rated current level of the ATSE, select appropriately sized wires to connect the output terminals (Poles A, B, C, N) of the two circuit breakers one by one. Ensure the screws used to fasten the busbars are tightened with an appropriate torque.

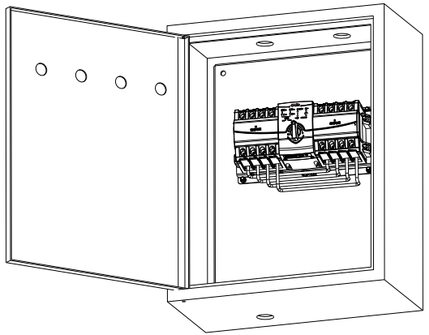

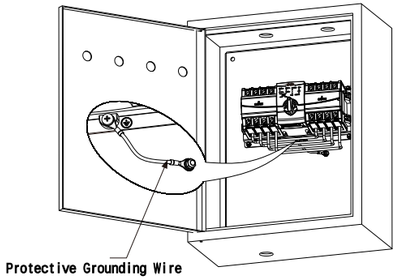

③ Connect the Protective Grounding Wire
There is a protective grounding bolt above the ATSE. During installation, connect the ATSE to the protective grounding wire of the switch cabinet. The protective grounding wire must be securely connected to ensure the safety of operators.

When installing the incoming line terminals, press the voltage sampling wire of the switch under the power busbar to ensure the largest possible conductive contact area between the power busbar and the circuit breaker.

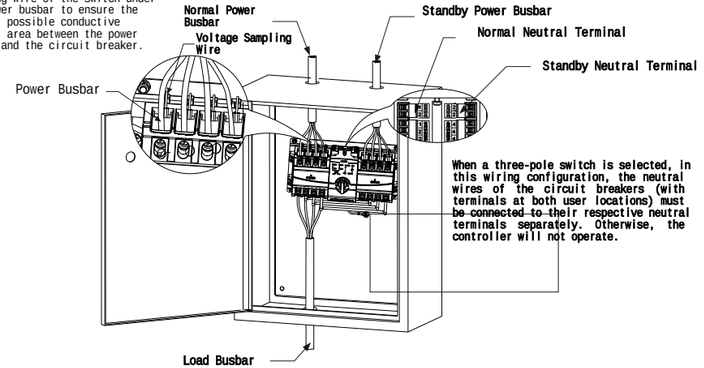

④. Install the Busbars
As shown in the left diagram: Connect the busbars of the normal power supply and the standby power supply to the upper terminals of the ATSE respectively. Then connect the load busbars to the busbars at the output terminals of the ATSE. During installation, ensure that the phase sequences of the two power supplies are identical.

⑤. Install External Indicator Lights
The control panel of this switch is equipped with normal power supply indication, standby power supply indication, and circuit breaker closing indication. It also provides external output terminals for these indication signals (AC220V/0.5A, active), allowing users to connect external indicator lights as required.
For specific wiring details, refer to the terminal instructions of the corresponding controller.

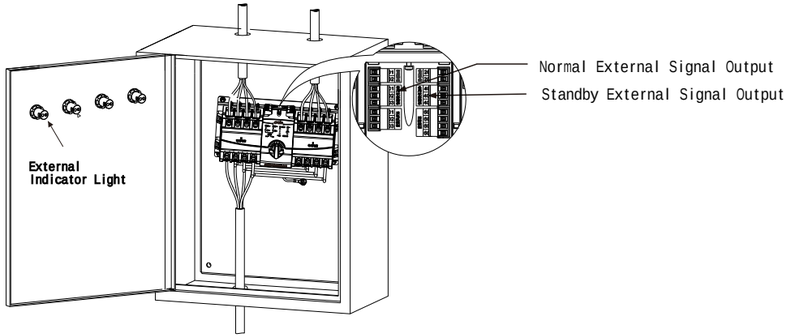

XLNX-A Type Controller

■XLNX-A Type Controller

This controller is a simplified model developed by our company to meet market demands. It features simple operation, practical functions, and intuitive display.

■Controller Structure

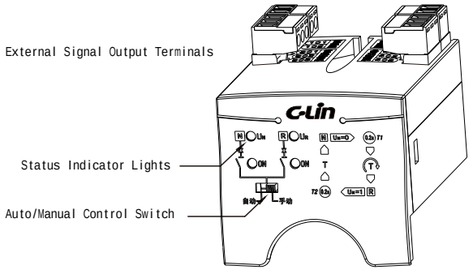

XLNX-A Type Controller

■Technical Parameters

Operating Ambient Temperature: -30°C ~ +60°C
Operating Power Supply Voltage Range: AC 85~280V
Power Consumption: ≤5W
Transfer Delay: 0.2 seconds
Return Delay: 0.2 seconds

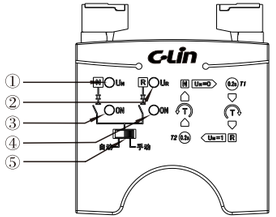

Control Panel Layout

① Normal Power Supply Indicator Light
② Standby Power Supply Indicator Light
③ Normal Power Supply Closing Indicator Light
④ Standby Power Supply Closing Indicator Light
⑤ Auto/Manual Transfer Mode Selector Switch

■Terminal and Wiring Instructions

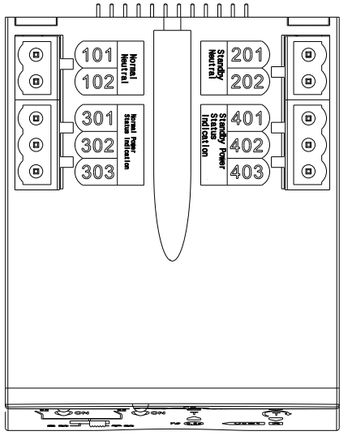

①: 101, 102 Neutral Terminals for Normal Power Supply of 3-pole switch (Connect to either terminal)

②: 201, 202 Neutral Terminals for Standby Power Supply of 3-pole switch (Connect to either terminal)

③: 301~303 Normal Power Supply External Status Indicator Signal Output (AC220V/0.5A)

301: Common Neutral for Signal Lamps

302: Normal Power Supply Signal Output

303: Normal Power Supply Closing Signal Output

④: 401~403 Standby Power Supply External Status Indicator Signal Output (AC220V/0.5A)

401: Common Neutral for Signal Lamps

402: Standby Power Supply Signal Output

403: Standby Power Supply Closing Signal Output

Schematic Wiring Diagram

XLNX-B Type Controller

■ XLNX-B Type Controller

This controller is a multi-functional power monitoring instrument that integrates measurement, analysis, control, protection and other functions. It is widely used in generator set control and power automation systems requiring high levels of automation.

■ Features

The controller's working mode and conversion parameters can be set via control buttons.

Fire linkage control function: The intelligent controller is equipped with a set of passive fire signal input terminals. The signal input uses optocoupler isolation, providing strong anti-interference capability; it also has a set of passive feedback signal output terminals to send switch position signals back to fire protection equipment.

Generator start-stop control function: The controller is provided with a set of relay dry contacts to control the start and stop of the generator.

■ Technical Parameters

Operating power supply voltage range: AC 85 ~ 280V

Operating ambient temperature: -30 ~ +60℃

Power consumption: ≤5W

Conversion delay: 0.1s ~ 30s (adjustable)

Return delay: 0.1s ~ 30s (adjustable)

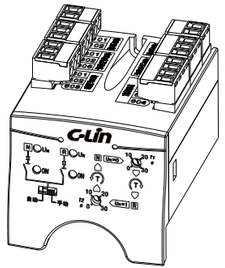

XLNX-B Type Controller

■ Terminals & Wiring Instructions：

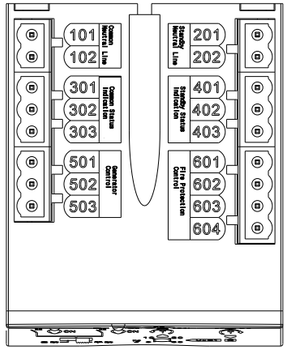

①: 101, 102 – Neutral line terminals for the normal power supply of the three-pole switch (connect to any one pole).
②: 201, 202 – Neutral line terminals for the standby power supply of the three-pole switch (connect to any one pole).
③: 301~303 – Status indicator signal output for normal power supply (AC 220V 0.5A).
301: Neutral line for signal lamp of normal power supply
302: Normal power supply signal output
303: Closing signal output for normal power supply
④: 401~403 – Status indicator signal output for standby power supply (AC 220V 0.5A).
401: Neutral line for signal lamp of standby power supply
402: Standby power supply signal output
403: Closing signal output for standby power supply
⑤: 501~503 – Generator start control signal output terminals.
When the standby power supply is used in an automatic generator set, the user can connect terminals 501~503 to the generator controller to achieve automatic generator starting.
Internally, 501~503 are a set of passive relay dry contacts:
503: Common relay terminal
501: Normally closed contact
502: Normally open contact
When the normal power supply is normal:
503 and 502 are closed, 503 and 501 are open.
When the normal power supply fails:
503 and 502 open, while 503 and 501 close to send a generator start signal.
After the generator starts successfully, the switch automatically transfers to the standby power supply to load.
During the power supply transfer, if the normal power supply is restored, the controller will switch back to the normal power supply after the return delay:
The closing contacts 503 and 502 will close after 3 seconds, and 503 and 501 will open to send a shutdown signal.

⑥: 601~604 – Fire linkage control port.
This port is used for remote control of the switch to cut off the power supply after a fire alarm.
601, 602: Fire linkage control signal input terminals.
This external interface can only be connected to a set of normally open dry contacts.
If the fire protection device sends an active signal, it must first pass through a small relay to convert it to a normally open dry contact before connecting to the controller (otherwise, the controller will be damaged).
When the external contacts are closed, the controller immediately switches the transfer switch to the open position to cut off the load power supply, and simultaneously sends a feedback signal to the fire control center via terminals 603 and 604.

603, 604 – This is a set of normally open relay dry contacts inside, used for the fire action feedback signal. The terminals are normally open under normal conditions; when a fire signal is sent to the controller and the switch is switched to the open position, 603 and 604 will be connected.(Note: After the fire linkage function is activated, the automatic transfer switch will stop working. To restore normal switching of the switch, you must first remove the fire signal, then toggle the Auto/Manual transfer switch on the control panel once, and the switch will resume normal operation.)

■Typical Application:

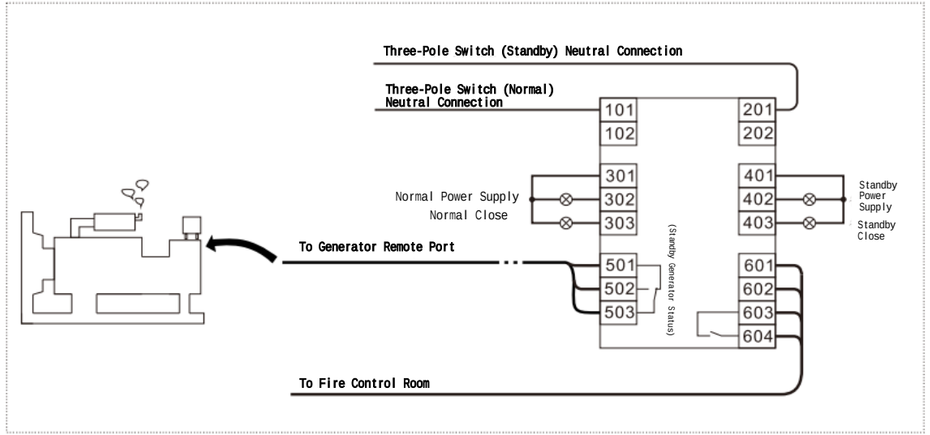

■Control Panel Functions

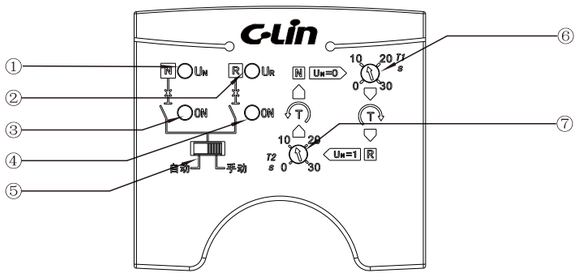

① Normal Power Supply Normal Indicator
Illuminates when the voltage of the normal power supply is normal.
② Standby Power Supply Normal Indicator
Illuminates when the voltage of the standby power supply is normal.
③ Normal Power Supply Close Indicator
Illuminates when the switch is in the normal power supply position; flashes when the controller is in the return delay state.
④ Standby Power Supply Close Indicator
Illuminates when the switch is in the standby power supply position; flashes when the controller is in the transfer delay state.
⑤ Auto/Manual Transfer Mode Control Switch
When the control switch is in the left position, it is in automatic transfer mode; when in the right position, it is in manual transfer mode.
⑥ Transfer Delay Time Setting Potentiometer
(Adjusts the delay time for switching from the normal power supply to the standby power supply)

When the switch is in the normal power supply closed position:
If the normal power supply fails while the standby power supply remains normal, the controller starts timing (the delay duration is set by the transfer delay potentiometer). After the timing period expires, the controller switches the power supply to the standby source.
A longer delay time can prevent unintended switching caused by momentary grid voltage drops (e.g., temporary voltage reductions triggered by the startup of large motors on the same grid).
⑦ Return Delay Time Adjustment Potentiometer
(Adjusts the delay time for switching from the standby power supply back to the normal power supply)
When the switch is in the standby power supply closed position:
If the normal power supply resumes, the controller starts timing (the delay duration is set by the return delay potentiometer). After the timing period expires, the controller switches the power supply back to the normal source.

■ Pre-Power-On Inspection
After completing all switch installation and wiring steps, it is recommended to inspect the installation to prevent errors.
●Please check that the switch installation and wiring are correct. Pay special attention to key terminals such as the power busbars.
●Verify that the external signal indicator lights are correctly connected and free of short circuits.
●Ensure that the busbar screws are securely tightened.
●It is recommended to disconnect the load during the first power-on commissioning.
After completing the above inspections and confirming no issues, the device can be powered on for commissioning and operation.

■ Operation
■ Automatic Operation Mode
During normal operation, set the Auto/Manual Control Switch to the "Auto" position.
In automatic control mode:
The controller monitors both the normal and standby power supplies simultaneously. If the normal power supply fails while the standby power supply remains normal, the ATSE will automatically transfer the load from the normal power supply to the standby power supply after the transfer delay period. Once the normal power supply is restored, the ATSE will switch back to the normal power supply after the return delay period.

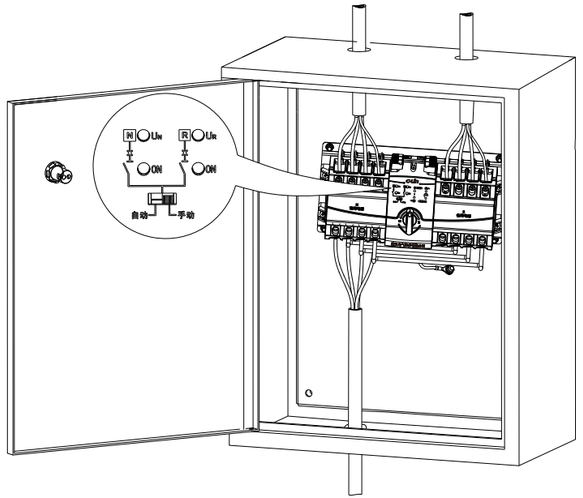

■ Manual Operation via Handle

When manual transfer is required under special circumstances, first set the Auto/Manual Control Switch to the "Manual" position, then use the Manual Operating Handle on the switch to perform manual transfer.

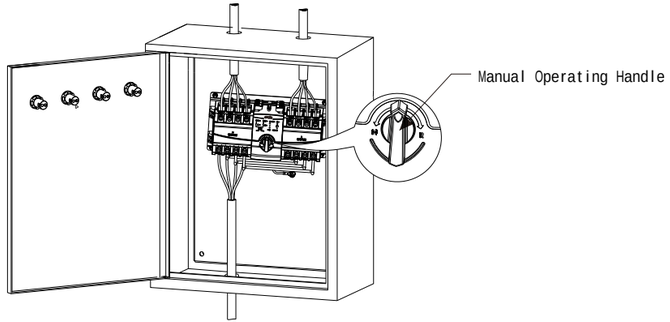

In manual control mode:
Rotate the switch handle counterclockwise to switch to the Normal Power Supply position.
Rotate the switch handle clockwise to switch to the Standby Power Supply position.
When automatic switch transfer is required, toggle the Auto/Manual Control Switch back to the "Auto" position.

In the event of a trip fault (when the power supply is normal, but the switch remains in the closed position with no power output):
First, resolve the load fault.
Set the Auto/Manual Control Switch to the "Manual" position.
Use the Manual Operating Handle to switch the ATSE to the double-open position.
Finally, set the Auto/Manual Control Switch back to the "Auto" position, and the switch will resume normal automatic operation.

Troubleshooting & After-Sales Service

■ System Maintenance

To ensure the reliable operation of the switch, please perform a transfer test regularly (recommended every 3 months) to confirm normal functionality and maintain continuous power supply to critical loads.

■ Common Troubleshooting

If the switch fails to transfer normally, refer to the table below for troubleshooting. If the issue persists after following these steps, please contact our company or your local distributor.

Fault Phenomenon	Fault Check	Troubleshooting Solution
Controller indicator does not light up after power-on	Power sampling wire disconnected	Reconnect the corresponding wire
	3-pole switch: system neutral wire not connected to the neutral terminal	
Controller displays normally but the switch fails to transfer automatically	Check if the controller is in Manual mode	Set the controller to automatic transfer mode
Power supply is normal, switch is in closed position, but no power at load terminal	Check if the switch has tripped	After resolving the load fault, manually reset the switch

■ Warranty Period & After-Sales Service

This product is manufactured under a comprehensive quality management system. In the event of a fault, the warranty and after-sales service terms are specified as follows:

The transfer switch itself shall be inspected and maintained regularly in accordance with the requirements of the selected circuit breaker and electric operating mechanism. Products not in use for an extended period should be protected from moisture and dust. Before use, commissioning shall be performed as described above, and the product may only be put into operation after confirming normal functionality.

Warranty Period: Under the condition that the user complies with storage and usage requirements, this product is covered by a 3-in-1 warranty (repair, replacement, refund) for 12 months from the date of use (but no longer than 18 months from the date of shipment). During the warranty period, the user shall adjust, operate, and maintain the product in accordance with its usage requirements. If the transfer device is intact but the product is damaged or fails to operate normally due to quality issues, our company will repair or replace it free of charge.

However, faults caused by the following reasons will be subject to paid repair or replacement, even during the warranty period:

Incorrect operation, unauthorized modification, or improper maintenance

Operation beyond the limits specified in the standard specifications

Damage caused by dropping after purchase or during installation

Earthquake, fire, lightning strike, abnormal voltage, other natural disasters, or secondary disasters

Memo :

XLDQ3NM Series Dual Power Automatic Transfer Switch

Model and Description

XLDQ3 □ □ □-□/□ □

- Transfer model
  - R: Self-throwing and self-reset(Power network to power network)
  - S: Self-throwing and not self-reset(Power network to power network)
  - F: Self-throwing and self-reset(Power network to power generation)
- The No. of poles
  - 2: 2 poles
  - 3: 3 poles
  - 4: 4 poles
- Rated current of circuit breaker
- Case grade rated current: 63A,100A,225A,400A,630A or 800A
- Controller type
  - XA: Standard(With self-throwing and self-reset) with ≤63A MCB
  - XB: Intelligent(LED display power voltage, start motor, fire linkage) with ≤63A MCB
  - XC: Intelligent(With function of B, but LCD display) with ≤63A MCB
  - XD: Intelligent(With function of B and frequency display, telecommunication) with ≤63A MCB
  - MA: Standard(With self-throwing and self-reset) with ≥100A MCCB
  - MB: Intelligent(LED display power voltage, start motor, fire linkage) ≥100A MCCB
- Structure type: N: Install circuit breaker DZ47,C65,CM1
- Dual Power Automatic Transfer Switch

XLDQ3NM

Controller XLNM-A type

Controller XLNM-B type

Specification of Controller

	XLDQ3NM-A	XLDQ3NM-B
Power supply / Consumption	AC150~260V, 50/60Hz / ≤20W	AC150~300V, 50/60Hz / ≤10W
Installation	Integrated	Integrated or Separated
Auxiliary power supply		DC15~30V
Voltage measurement range		40~300V
Under voltage conversion value		Adjustable: 160~200V
Over voltage conversion value		Adjustable: 240~290V
Working position	2	3
Operate method	Automatic and Manual	Automatic, Manual or Manual remote control
Power generation control		1C 10A relay
Fire linkage		Passive contact input with 1 NO passive signal feedback contact
Display	Indicator light	LED and with voltage display
Transfer mode	R	R, S, F
Transfer delay / Returns delay	0.5 Sec.	Adjustable: 0~180 Sec.
Voltage detection		Overvoltage, undervoltage,Phase-failure

Structure, Terminal and Wiring of the Controller

XLNM-A type

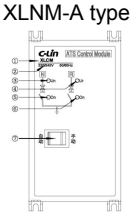

①: Controller model

②: Power supply

③: Indicator of prime power

④: Indicator of standby power

⑤: Close indicator of prime power

⑥: Close indicator of standby power

⑦: Automatic / Manual operate method

XLNM-A type

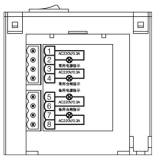

1~4:

Indicator of prime power(Active AC220V/0.3A) (1: Firing line of prime power, 2: Zero line of prime power, 3: Firing line of prime power closed, 4: Zero line of prime power closed.

5~8:

Indicator of standby power (Active AC220V / 0.3A) (1: Firing line of standby power, 2: Zero line of standby power, 3: Firing line of standby power closed, 4: Zero line of standby power closed.

XLNM-B type

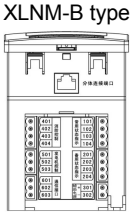

101~104:

Indicator of prime power(Active AC220V/0.5A) (101: Common zero line, 102: Signal output, 103: Closed signal output, 104: Tripped signal output).

201~204:

Indicator of standby power(Active AC220V/0.5A) (201: Common zero line, 202: Signal output, 203: Closed signal output, 204: Tripped signal output).

301~302:

Auxiliary power of the control(Control the start-up delay of the generator, if don't need start-up delay, pls don't connect.)

401~404: Fire linkage.

501~503: Start control signal output of power generator(501: NO terminal, 502: Common terminal, 503: NC terminal).

Dimension, Installation and Application

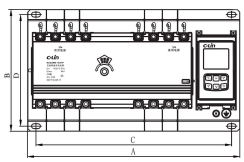

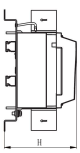
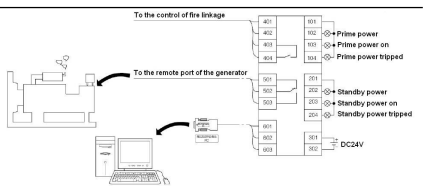
XLDQ3 NM-	A 3P	A 4P	B 3P	B 4P	C 3P	C 4P	D 3P	D 4P	H	E 3P	E 4P
63	355	380	240		320	348	220		150	178	
100	390	420	240		358	388	220		150	194	
225	435	470	240		400	438	220		150	225	
400	565	615	330		505	555	300		200	304	
630	680	740	330		620	680	300		230	385	
800	785	790	350		745	750	320		380	396