C-Lin
欣灵电气股份有限公司
XINLING ELECTRICAL CO.,LTD.
地址：浙江乐清经济开发区纬十九路328号
热线：0577-62735555　传真：0577-62722963
Http：//www.c-lin.cn　Email：xl@xinling.com
技术服务热线：400 1663 188

RECYCLABLE

浙江省知名商号 国家高新技术企业

C-Lin 欣灵

使用说明书
Products Instructions

XLDS2

Series Automatic Transfer Switching Equipment

Thank you for using C-Lin Automatic Transfer Switching Equipment. Please read the instruction manual before using the product!

31A002E0

Table of Contents

Introduction ……1
I.Product Overview ……2
II.Operating Conditions ……2
III.Transportation and Storage Conditions ……3
IV.Product Model Definition ……3
V.Product Function Introduction……4
VI.Technical Performance Parameters ……6
VII.Product Installation and Operation Instructions ……7
VIII.Terminal Definition……10
IX.Outline and Mounting Dimensions……14
X.Operation Introduction of Split Controller ……17
XI.Operation and Maintenance……19
XII.Precautions for Unpacking and Inspection……19

Introduction

Thank you for using the products manufactured by our company. We will ensure your peace of mind with reliable quality and dedicated service. Please read this instruction manual carefully before installation, circuit connection, operation, and maintenance inspection to ensure correct use. Also, be sure to familiarize yourself with all safety information and precautions during use.

Product Usage Precautions:

1.This device may only be installed, commissioned, and maintained by qualified personnel.
2.Before installation, commissioning, and maintenance, disconnect both power supplies of this device.
3.Use a voltmeter to verify that the power supply has been disconnected.
4.The device must be reliably grounded as required.
5.Reset the cabinet door and arc chute (plate) before powering on the device.
6.Improper operation may result in electric shock, fire, or explosion.

I.Product Overview

The XLDS2 series belongs to PC-level Automatic Transfer Switching Equipment (ATSE). It is mainly used in two neutral-point grounded power supply systems with AC 50/60Hz, a rated voltage of 400V or below, and a rated operating current ranging from 16A to 3200A. When one power source malfunctions, it switches between power sources to ensure the reliability and safety of power supply.

This automatic transfer switching equipment has three positions: “I (Normal) Closed”, “II (Standby) Closed”, and “O (Both Disconnected)”. It is widely applied in the automatic transfer between I (normal) power supply and II (standby) power supply in power supply systems, as well as the automatic transfer and safety isolation of two load devices.

The product complies with the standard GB/T 14048.11 《Low-voltage switchgear and controlgear - Part 6-1: Multi-functional equipment - Transfer switching equipment》.

II.Operating Conditions

2.1 Ambient Air Temperature: -5℃～+40℃, and the 24-hour average temperature shall not exceed +35℃.

2.2 Atmospheric Humidity:At the maximum temperature of +40℃, the relative humidity shall not exceed 50%;The monthly maximum relative humidity is 90% (higher relative humidity is allowed at lower temperatures). Appropriate measures shall be taken for condensation occasionally caused by temperature changes.

2.3 Installation Altitude: The altitude of the installation site shall not exceed 2000 meters.

2.4 Pollution Degree: The environmental pollution degree at the installation site is Grade 3.

2.5 Utilization Category: AC-33iB.

2.6 Electromagnetic Environment:

Suitable for Environment A;When used in Environment B, harmful electromagnetic interference may occur. Users shall take appropriate protective measures.

III.Transportation and Storage Conditions

3.1 During transportation, the product shall not be exposed to rain or snow.

3.2 Storage environmental conditions: Temperature ranges from -25℃ to +55℃, and relative humidity is not more than 95% (at 25℃).

IV.Product Model Definition

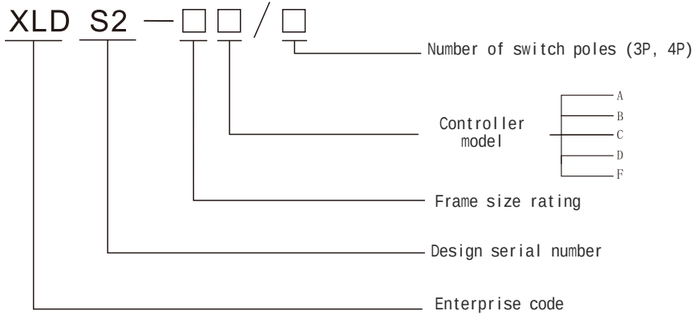

V.Product Function Introduction

Controller Code	Function Introduction
Type A	1.I (Normal)/II (Standby) power indicator, closing status indicator. 2.Active output for standby power indicator and closing status indicator ports. 3.Single-phase detection. 4. Automatic transfer and automatic restoration.
Type B	1.I (Normal)/II (Standby) power indicator, closing status indicator. 2.Active output for standby power indicator and closing status indicator ports. 3.Single-phase detection. 4.Automatic transfer and automatic restoration. 5.Passive fire protection linkage.6. Generator start function.
Type C	1.I (Normal)/II (Standby) power indicator, closing status indicator. 2.Active output for I (Normal)/II (Standby) power indicator and closing status indicator ports. 3.Three-phase overvoltage, undervoltage, and loss-of-voltage detection. 4.Automatic transfer and automatic restoration (default), customizable to automatic transfer without automatic restoration. 5.Passive fire protection linkage and passive feedback signal output. 6.Generator start function.7. DC24V auxiliary power input.8. Optional LCD split-screen display.
Type D	1.I (Normal)/II (Standby) power indicator, closing status indicator. 2.Active output for I (Normal)/II (Standby) power indicator and closing status indicator ports. 3.Three-phase phase failure, overvoltage, and undervoltage detection. 4.Automatic transfer and automatic restoration (default), user-configurable to automatic transfer without automatic restoration. 5.Passive fire protection linkage. 6.Generator start function. 7.DC24V auxiliary power input. 8. LCD Chinese text display. 9.Equipped with RS485 communication port.
Type F	1.I (Normal)/II (Standby) power indicator, closing status indicator. 2.Active output for I (Normal)/II (Standby) power indicator and closing status indicator ports. 3.Three-phase overvoltage, undervoltage, loss-of-voltage, and phase sequence detection. 4.Automatic transfer and automatic restoration (default), customizable to automatic transfer without automatic restoration. 5.Fire protection forced transfer port. 6.Power failure alarm port. 7.Switch failure alarm port. 8.DC24V auxiliary power input.9. Optional LCD split-screen display.

Functional Parameter Table

Item \ Model	Type A	Type B	Type C	Type D	Type F
Rated Operating Voltage	AC400V 50/60Hz				
Auxiliary Operating Power Voltage	DC24V				
Voltage Measurement Range	40~300V				
Power Consumption	≤10W				
Operating Position	(Normal Close, Standby Close, Double Open) – 3 operating positions				
Operation Mode	Manual, Automatic			Manual, Automatic, Remote Control	Manual, Automatic
Display Mode	LED Indicator Status Display			LCD Display	LED Indicator Status Display
Transfer Mode	Automatic Transfer and Automatic Restoration		Automatic Transfer and Automatic Restoration / Automatic Transfer without Automatic Restoration		
Under-voltage Transfer Value	None		187V	160~200V Adjustable	187V
Over-voltage Transfer Value	None		263V	240~290V Adjustable	263V
Transfer Delay Function	None		0	0~180s Continuously Adjustable	0
Return Delay Function	None		0	0~180s Continuously Adjustable	0
Phase Failure Detection	Single-phase (Phase A)		Three-phase (A, B, C)		
Power Supply Over/Under Voltage and Phase Sequence Error Alarm Output	None				Yes
Generator Control	None	Yes (One set of DC24V relay dry contacts)			None
Fire Protection Linkage Control	None	Fire Protection Non-Essential Load Shedding (Passive contact input with one set of normally open passive signal feedback contacts)			Forced Transfer to Standby Power Supply (Passive Input)
Switch Failure Alarm Indication	None				With one set of passive contacts
RS485 Communication Function	None			Yes	None
Installation Mode	Integrated Type (Without Display Screen)		Available in Integrated Type and Split Type (Note: Integrated Type without display screen)		

VI.Technical Performance Parameters

Technical Parameter Table

Conventional Enclosed Thermal Current Ith (A)	100	250	630	1000	1250	1600	2000	2500	3200
Rated Insulation Voltage Ui (V)	690V								
Rated Insulation Voltage Ui (V)	8KV								
Rated Operating Current Ie (A)	16A, 20A 25A, 30A 32A, 40A 50A, 60A 63A, 70A 75A, 80A 100A	140A 160A 200A 225A 250A	315A 350A 400A 500A 630A	800A 1000A	1250A	1600A	2000A	2500A	3200A
Rated Short-circuit Making Capacity Icm (kA Peak Value)	8KA	17KA	26KA	50KA			55KA		
Rated Limiting Short-circuit Current Iq	120KA								
Control Power Supply Voltage	AC230V								
Transfer Time (S)	0.5	1.1	1.2	1.25			2.45		

VII.Product Installation and Usage Introduction

■ Correct Installation Method of the Switch

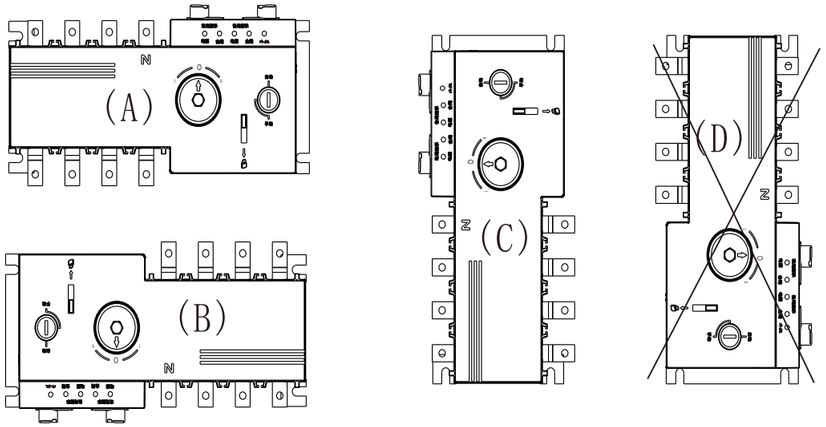

A, B, and C are installed correctly; D is installed incorrectly

■ Wiring Diagram of the Switch

Frame Size Current 100A~1600A

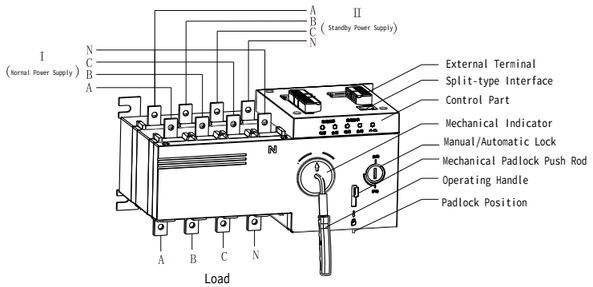

Frame Size Current 2000A~3200A

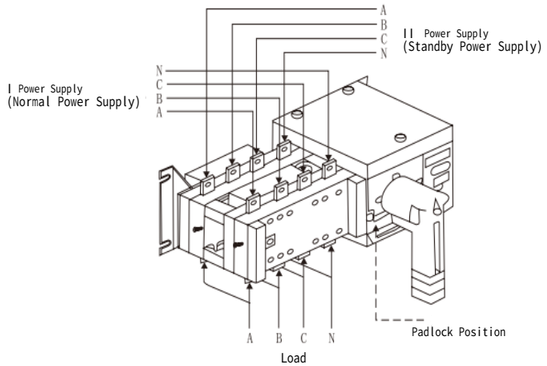

VIII.Terminal Definition

■ Frame Size Current: 100A~630A

Wiring Diagram for Type A, B, C, D 4-Pole Controllers

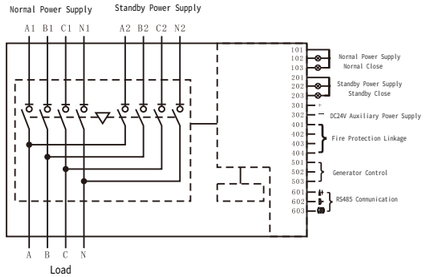

Wiring Diagram for Type A, B, C, D 3-Pole Controllers

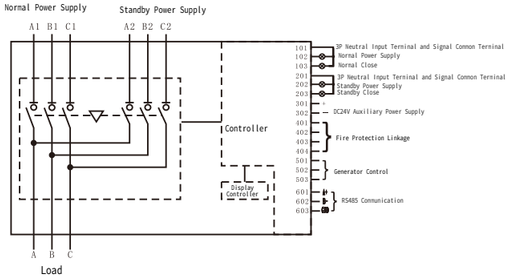

1.External Terminal Wiring Instructions

101~103: Status Indication Output for External I (Normal) Power Supply (Active AC220V/0.5A)
101: Common neutral for indicator light + 3P neutral input terminal
102: Signal output for I (Normal) power supply
103: Close signal output for I (Normal) power supply

201~203: Status Indication Output for External II (Standby) Power Supply (Active AC220V/0.5A)201: Common neutral for indicator light + 3P neutral input terminal
202: Signal output for II (Standby) power supply
203: Close signal output for II (Standby) power supply

301~302: DC24V Auxiliary Power Input
301: DC24V positive pole input
302: DC24V negative pole input

401~404: Fire Protection Linkage Signal Input & Feedback Signal Output
401, 402: Passive fire protection linkage signal input
403, 404: Double-open signal feedback output after fire protection activation

501~503: Generator Start Control Signal Output
501: Normally open (NO) control signal terminal
502: Common control signal terminal
503: Normally closed (NC) control signal terminal

601－603: RS485 Communication Port：601: A+602: B-603: GND

Notes:
1.If the output signal of the fire - fighting equipment is an active signal, circuit conversion for the signal is required. For example: Install a relay for signal conversion, and connect the normally open contact of the relay to terminals 401 and 402. When the normally open contact closes, the dual - power supply switches to the open position. After the fire - fighting function is activated, the automatic conversion stops. To restore the normal operation of the switch, the fire - fighting signal must be canceled first, so that the switch can return to the normal operation mode. For intelligent - type devices, an additional switch of the manual/automatic control switch is also required.
2.When the II (standby) power supply is a generator set:
When the I (commonly used) power supply is normal: Terminals 501 and 502 are closed, while 502 and 503 are open.
When the I (commonly used) power supply fails: Terminals 501 and 502 are open, while 502 and 503 are closed.
3.For the usage method of the RS485 communication port, refer to the communication protocol.

VIII.Terminal Definition

■ **Frame - size Rated Current: 100A～630A**

Type F Control 4P Wiring Diagram

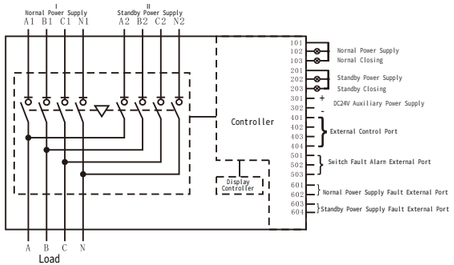

Wiring Diagram for Type F 3-Pole Controller

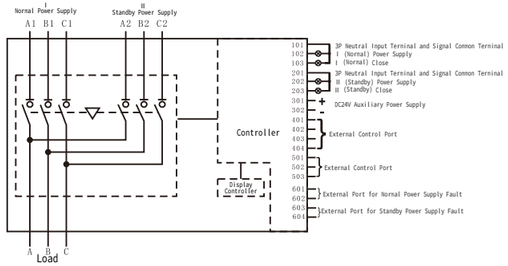

1. External Terminal Wiring Instructions
101~103: Status indication output for external Ⅰ (Normal Power Supply) (Active AC220V/0.5A)
101---Common neutral for indicator light + 3P neutral input terminal
102---Signal output for Ⅰ (Normal) power supply
103---Close signal output for Ⅰ (Normal) power supply
201~203: Status indication signal output for external Ⅱ (Standby Power Supply) (Active AC220V/0.5A)
201---Common neutral for indicator light + 3P neutral input terminal
202---Signal output for Ⅱ (Standby) power supply
203---Close signal output for Ⅱ (Standby) power supply
301~302: DC24V auxiliary power input
301---DC24V positive pole input
302---DC24V negative pole input
401~404: External control port
401: Common terminal for *active fire protection linkage short-circuit input
Short-circuit 401 & 402 → Close for Ⅰ (Normal)
Short-circuit 401 & 403 → Double-open position
Short-circuit 401 & 404 → Close for Ⅱ (Standby)
501~503: External port for switch fault alarm
501---Normally open (NO) control signal terminal
502---Common control signal terminal
503---Normally closed (NC) control signal terminal

601~604: Fault Alarm Ports for Ⅰ (Normal)/Ⅱ (Standby) Power Supplies
601~602---External Port for Ⅰ (Normal) Power Supply Fault
603~604---External Port for Ⅱ (Standby) Power Supply Fault

Notes:1.If the output signal of fire protection equipment is an active signal, signal line conversion is required. For example, use a relay for signal conversion: connect the NO (Normally Open) contact of the relay to the fire protection remote forced port. Once this function is activated, automatic transfer will stop. To restore normal switch operation, the short-circuit signal must be removed first.

2.Description of switch fault alarm ports:When the product operates normally (no faults), terminals 502 and 503 remain closed (NC).If an abnormality occurs (e.g., locked-rotor, incomplete closing), the controller detects the fault and triggers a feedback signal (501 and 502 conduct, dry contact).

3.Description of Ⅰ (Normal)/Ⅱ (Standby) power supply fault alarm ports:When the input power is normal, the Ⅰ (Normal)/Ⅱ (Standby) ports remain closed (NC).If a phase sequence error or phase failure occurs, the ports switch from NC to open (NO) and output a feedback signal (dry contact).

■ Frame Size Current: 1000A~3200A

Fully Automatic Wiring Mode

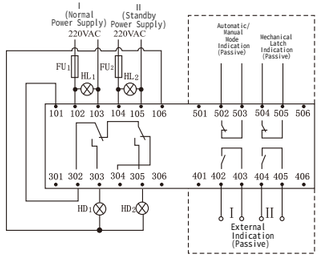

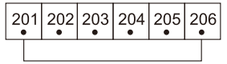

Short-circuit terminals 201 and 206

Fully Automatic + Forced "0" (Both Power Supplies Disconnected) Wiring Mode

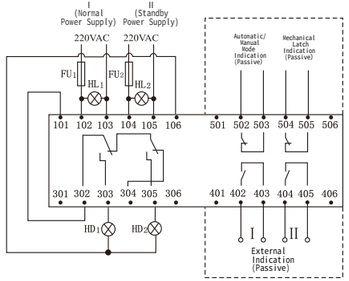

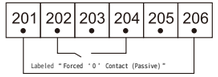

Fully Automatic + Generator Signal Output Wiring Mode

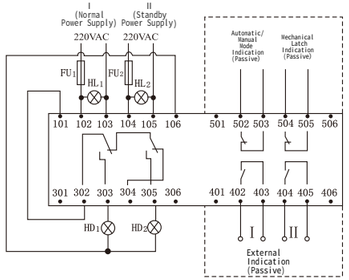

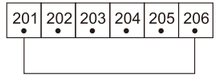

Short-circuit terminals 201 and 206

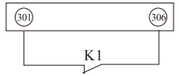

Generator signal outputs when I (Normal) power supply

Fully Automatic + Manual (Remote Control) Wiring Mode

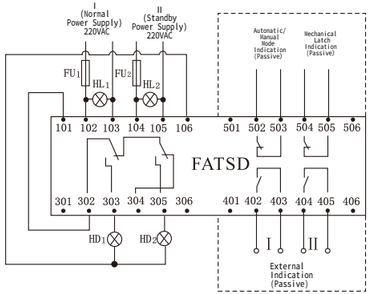

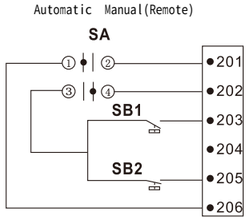

■ Frame Size Current: 2000A~3200A

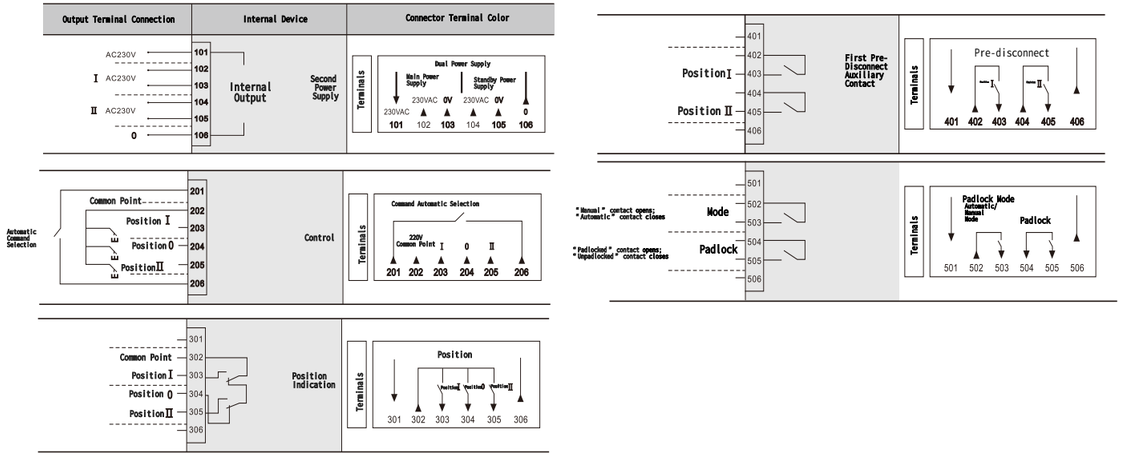

IX.Outline and Installation Dimensions

■ Frame Size Current: 100A~630A

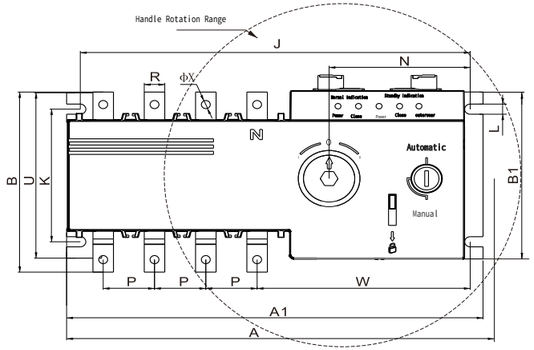

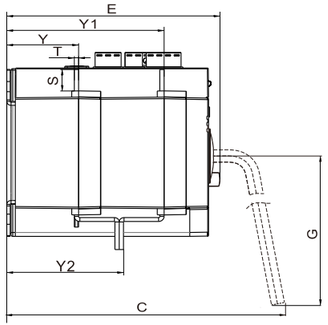

Specification	Overall Dimensions (mm)							Installation Dimensions (mm)													
In	A	A1	B	B1	C	E	G	J	K	L	N	P	R	S	T	U	W	ΦX	Y	Y1	Y2
100A	330	244	115	127	165	125	174	228	85	6.5	83	30	12	18	(2.5)5	99	125	6.2	42	92	68
250A	436	373	178	154	238	198	174	344	108	7	99	50	24	30	(3.5)7	148	173	11	72	157	116
630A	502	433	260	242	284	244	174	416	180	9	101	65	40	50	(5)10	222	185	12	83	193	140

■ Frame Size Current: 1000A~1600A

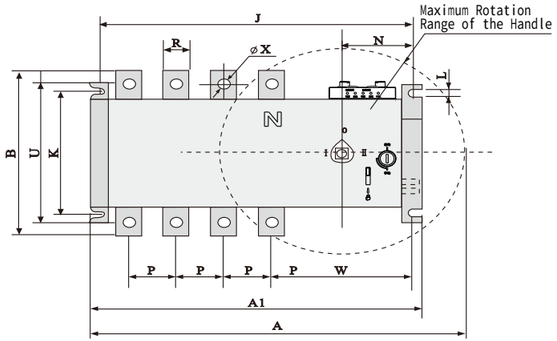

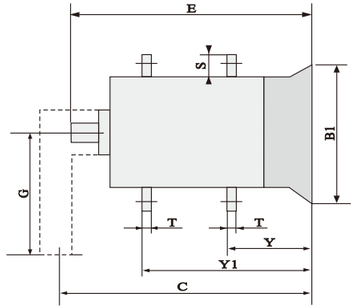

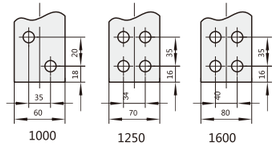

Specification	Overall Dimensions (mm)							Installation Dimensions (mm)												
In	A	A1	B	B1	C	E	G	J	K	L	N	P	R	S	T	U	W	ΦX	Y	Y1
1000A	1050	633	340	250	363	320	470	613	220	11	88	120	60	69	8	250	207	13	109	255
1250A	1050	633	340	250	363	320	470	613	220	11	88	120	80	69	8	250	207	13	109	255
1600A	1050	633	340	250	363	320	470	613	220	11	88	120	80	69	10	250	207	13	109	255

■ Frame Size Current: 2000A~3200A

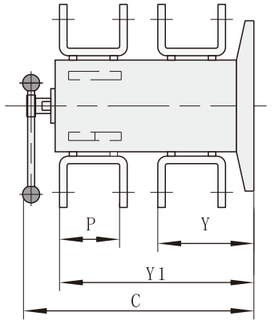

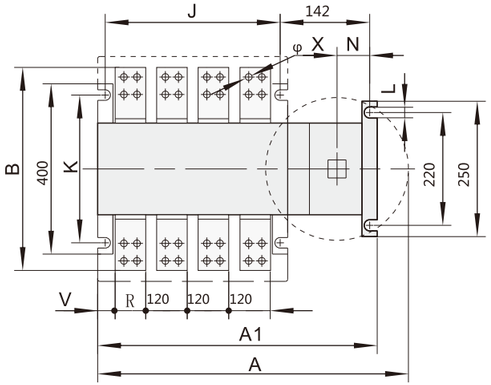

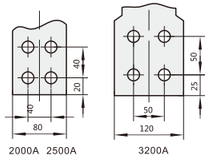

Specification	Overall Dimensions (mm)					Installation Dimensions (mm)									
In	A	A1	B	C	E	J	K	L	N	P	R	v	ΦX	Y	Y1
2000A	1007	640	465	562	495	610	223	11	84.5	137	80	33	13	226	457
2500A	1007	640	465	562	495	610	223	11	84.5	137	80	33	13	226	457
3200A	1007	640	465	562	495	610	223	11	84.5	137	120	13	13	230	462

X.Operation Introduction of Split Controller

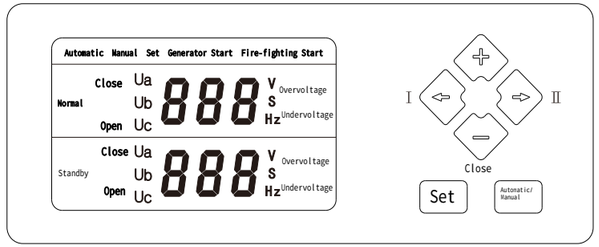

Note:This controller is designed for electrical devices with a frame size current range of 100A~630A.

For user convenience, the product provides commonly used switching parameters for modification during design. These parameters are preset by the manufacturer before the switch leaves the factory. The default parameters at delivery are as follows:

① Undervoltage conversion value of power supply I (common): 187V②
Overvoltage conversion value of power supply I (common): 263V
③ Undervoltage conversion value of power supply II (standby): 187V
④ Overvoltage conversion value of power supply II (standby): 263V
⑤ Conversion delay time: 5S
⑥ Return delay time: 5S
⑦ Generator start delay time: 5S
⑧ Generator stop delay time: 5S
⑨ Conversion mode: Grid-Grid

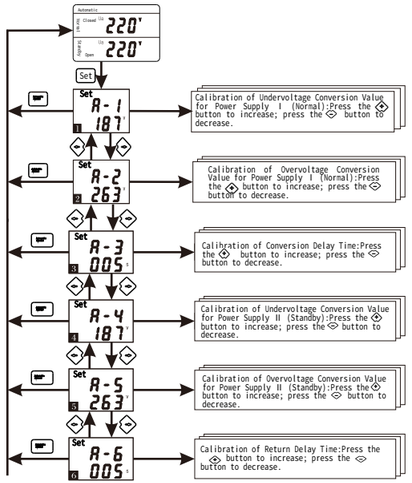

Continued

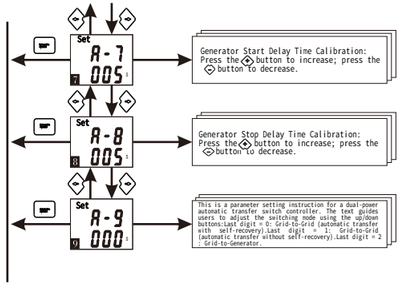

Key Instructions

When the controller is operating, press the **Set** button to display the parameter setting interface shown in the figure above on the LCD. In the setting menu, press the "⊕" "⊖" buttons to scroll through the setting options. Press the **Auto/Manual** button to exit the setting menu. Press the "⊕" "⊖" buttons to modify parameters.

XI.Use and Maintenance

1.Operating Voltage
The rated operating voltage of this product is AC400V, and the rated operating voltage of the controller is AC230V.
2.Wiring
When wiring the product, strictly follow the incoming line markings. For three-pole products, connect the neutral wire to the neutral terminal. Carry out wiring for fire linkage and power generation control according to actual conditions, and finally ensure the product is properly grounded.
3.Inspection and Maintenance
During the use of the product, conduct regular general inspections. Manually or automatically switch the power supply once to check if the product operates normally.Perform regular maintenance, remove dust, and maintain the product ’ s insulation performance.

XII.Precautions for Unboxing Inspection

When you receive the ordered product, please open the package and check the following items:
1.Verify the product nameplate to see if it matches the order requirements;
2.Check if the switch appearance is intact and if there is any physical damage caused by transportation or human factors;
3.Check if the operating mechanism and switch components are loose;
4.Be sure to read this manual before installation, operation, and maintenance inspection.
If any problems are found, please contact our company or the local distributor/agent as soon as possible.

Dual Power Automatic Transfer Switch

XLDS2 Series

Application

XLDS2 Series Auto transfer switch mainly used for electric distribution network or motor network with rated voltage 380V,50Hz,DC rated voltage 220V,rated current 16A to 3200A, change over between main power and backup power system ,power grid and genset. Meanwhile can be used as isolation of unfrequency making and breaking circuit.
It is widely used in the transmission and distribution system and automation system of the important place which not allow power cutoff such as fire-fighting.Hospital,Bank,high building etc
XLDS2 Series ATS accord to the standard:

International:

IEC60947-1(2001)《Low voltage switchgear and controlgear,part one:General Rules》
IEC60947-3(2005)《Low voltage switchgear and controlgear,switch,isolator and combined fuse switch etc》
IEC60947-6-1(2005)《Low voltage switchgear and controlgear multi-function switch:auto transfer switch etc.》
National:
GB/T14048.1-2006《Low voltage switchgear and controlgear,part one:General Rules》
GB14048.3-2008《Low voltage switchgear and controlgear,switch,isolator and combined fuse switch etc》
GB14048.11-2008《Low voltage switchgear and controlgear multi-function switch:auto transfer switch etc.》

Model Meanings

XL	DS	2	-	□	/	□
①	②	③		④		⑤

①	Company code
②	Dual power ATS
③	Design code
④	Rated Current
⑤	Poles(3,4)

Working Conditions

Ambient temperature:-20℃~+40℃;24hours average not more than+35℃;

Atmospheric conditions:humidity not more than 50%at max.+40℃,higher humidity is allowed at lower temperature,at most wet month,the average max humidity is 90%at the average min temperature +25℃,and have considered the condensation on the product surface due to temperature variation;

Altitude:Not more than 2000m;

Pollution Class:The installation site environment pollution Class 3.

XLDS2 Series

Main Technical Parameters

XLDS2-100-3200A series Auto transfer switch electric properties and mechanical properties

Rated Thermal Current Ith		100A						250A				630A		1000A		1600A		2000A	2500A	3200A
Rated Current In(A)		16	20	40	63	80	100	125	160	200	250	400	630	800	1000	1250	1600	2000	2500	3200
Rated insulation voltage Ui(V)		500	500	500	500	500	500	500	500	500	500	500	500	500	500	500	500	1000	1000	1000
Dielectric strength (V)		5000	5000	5000	5000	5000	5000	5000	5000	5000	5000	5000	5000	10000	10000	10000	10000	10000	10000	10000
Rated impulse withstand voltage Uimp KV (installation category)		8	8	8	8	8	8	8	8	8	8	12	12	12	12	12	12	12	12	12
Rated Working current Ie(A)	AC-33iB	16	20	40	63	80	100	125	160	200	250	400	630	800	1000	1250	1600	2000	2500	3200
Rated short time withstand current Icw(kA Rms)0.1S/1S		9/5	9/5	9/5	9/5	9/5	9/5	12/25	12/25	12/25	12/25	40/20	50/25	90/50	90/50	90/50	90/50	50	50	55
Rated Breaking capacity(A Rms) AC-33iB 380V		128	160	320	500	640	800	1000	1280	1600	2000	3200	5000	6400	8000	10000	12800	16000	20000	25600
Rated Making capacity (A Rms) AC-33iB 380V		160	200	400	630	800	1000	1250	1600	2000	2500	4000	6300	8000	10000	12500	16000	20000	25000	32000
Transfer Time	I-o-II I-o-II(S)	0.5	0.5	0.5	0.5	0.5	0.5	1	1	1.1	1.1	1.2	1.2	1.2	1.2	1.2	1.2	2.4	2.4	2.4
	I-o II-o(S)	0.3	0.3	0.3	0.3	0.3	0.3	0.6	0.6	0.7	0.7	0.8	0.8	0.8	0.8	0.8	0.8	1.6	1.6	1.6
Weight (kg)	3Poles	4.15	4.15	4.25	4.35	4.45	4.45	8.2	8.2	10.4	10.4	17.8	19	28	31	31	34			
	4Poles	4.2	4.2	4.3	4.4	4.5	4.5	8.7	8.7	11.3	11.3	20.2	22	32	36	36	40	95	98	135
Use categeory		AC-33iB(PC)																		

Dual Power Automatic Transfer Switch

XLDS2 Series

Performance And Characteristic

- It adopted double complex contact horizontal puling mechanism/micro motor energy pre storage and micro-computer control technology,basically come to Zero arc(no arcing chamber);
- Adopted reliable mechanical interlock and electric interlock,executive unit adopt independent load disconnect switch,it makes more reliable and safety;
- Adopt “Zero Position”technology,it can force to set to Zero Position under emergency situation(cutoff two way power supply,meet the fire linkage requirements;
- Load disconnect switch change over adopt singleness motor drive,switch over smooth and reliable,no noise,little impact;
- The driving motor have instant current across only under the load disconnect switch changeover,stable working status no need to provide the working current,outstanding energy saving;
- Executive load disconnect switch have mechanical interlock,make sure the Normal power and Reserve Power working reliable and no interference;
- Distinct ON and OFF position indicator,padlock function etc.,make reliable and safe isolation between power supply and loading.
- High security,high automatization,high reliability,working life more than 8000 times;
- Electromechanical integration design,accuracy change over,flexible,smoothly,adopt international advanced logical control technology,high anti-interference ability,no interference outward
- Have main power ON,backup power OFF;main power OFF,backup power ON;main and backup power OFF;three working mode(I-o-II);
- Easy installation,control circuit adopt plug type terminal connection;
- Four operating functions:Emergency manual,motor remote control,emergency OFF under auto control status,auto Control operation

Basic Type Switch Control Characteristic

- Suitable for two way main and backup power system,auto change auto recovery;
- Can expand functions by outer connection;
- Auto,Remote,Manual control functions;
- Delay 0.5s signal detect,avoid miss actuation;
- Under Auto control status have "O" position remote control;
- Key switch select the operating mode;
- Can with RS-485 communication port(optional),according to customer required.

ATS Working Flow

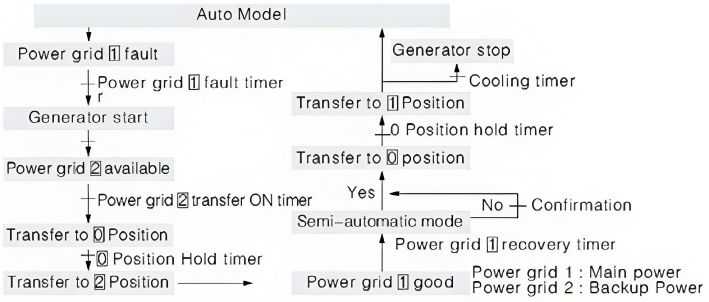

XLDS2 Series

XLDS2-100-1600A Auto Transfer Switch

- XLDS2-16A~630A outline and mounting size

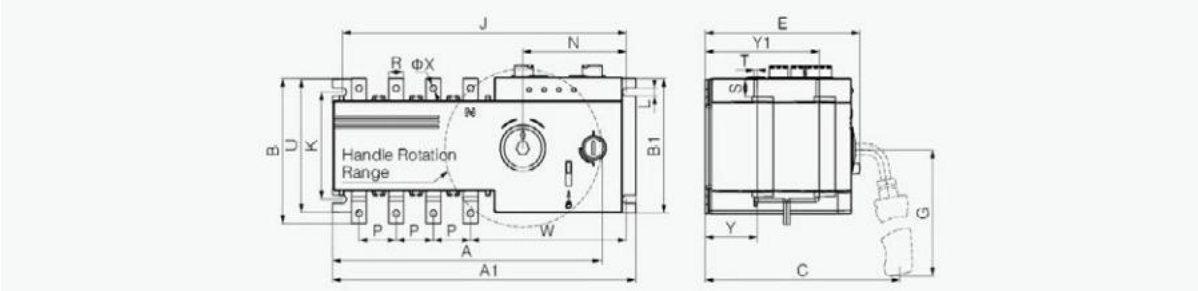

Specification	Outline and mounting size (mm)																			
In	A	A1	B	B1	C	E	G	J	K	L	N	P	R	S	T	U	W	ΦX	Y	Y1
100A	330	244	115	107	182	125	174	228	85	6.5	83	30	12	18	(2.5)5	99	125	5.2	42	92
250A	436	436	178	134	240	198	174	344	108	7	99	50	24	30	(3.5)7	148	173	11	72	157
630A	502	433	260	222	282	244	174	416	176	9	101	65	40	50	(5)10	222	185	12	83	193

- XLDS2-800A-1600A outline and mounting size

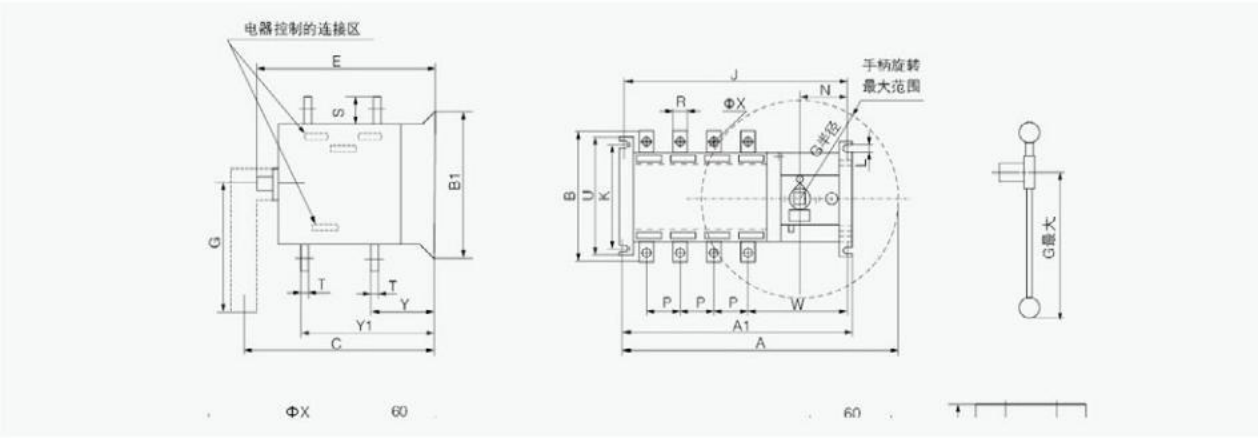

Specification	Outline and mounting size(mm)																			
In	A	A1	B	B1	C	E	G	J	K	L	N	P	R	S	T	U	W	ΦX	Y	Y1
800A/3	871.5	524	340	250	387	319.5	448	499	212	11	88	120	60	69	8	250	198.5	12.5	84	252
800A/4	975.5	637.5	340	250	387	319.5	448	612.5	212	13	88	120	60	69	8	250	207	12.5	107	252
1000A/3	871.5	524	340	250	387	319.5	448	499	212	13	88	120	60	69	8	250	198.5	12.5	107	252
1000A/4	975.5	637.5	340	250	387	319.5	448	612.5	212	13	88	120	60	69	8	250	207	12.5	107	252
1250A/3	871.5	524	369	250	387	319.5	448	499	212	13	88	120	60	69	8	250	198.5	13	107	252
1250A/4	975.5	637.5	369	250	387	319.5	448	612.5	212	13	88	120	60	69	8	250	207	13	107	252
1600A/3	871.5	524	376	250	387	319.5	448	499	212	13	88	120	60	69	10	250	198.5	13	109	253.5
1600A/4	975.5	637.5	376	250	387	319.5	448	612.5	212	13	88	120	60	69	10	250	207	13	109	253.5

XLDS2 Series

XLDS2-2000-3200A Outline And Installation Size

- XLDS2-2000-3200A outline and installation size

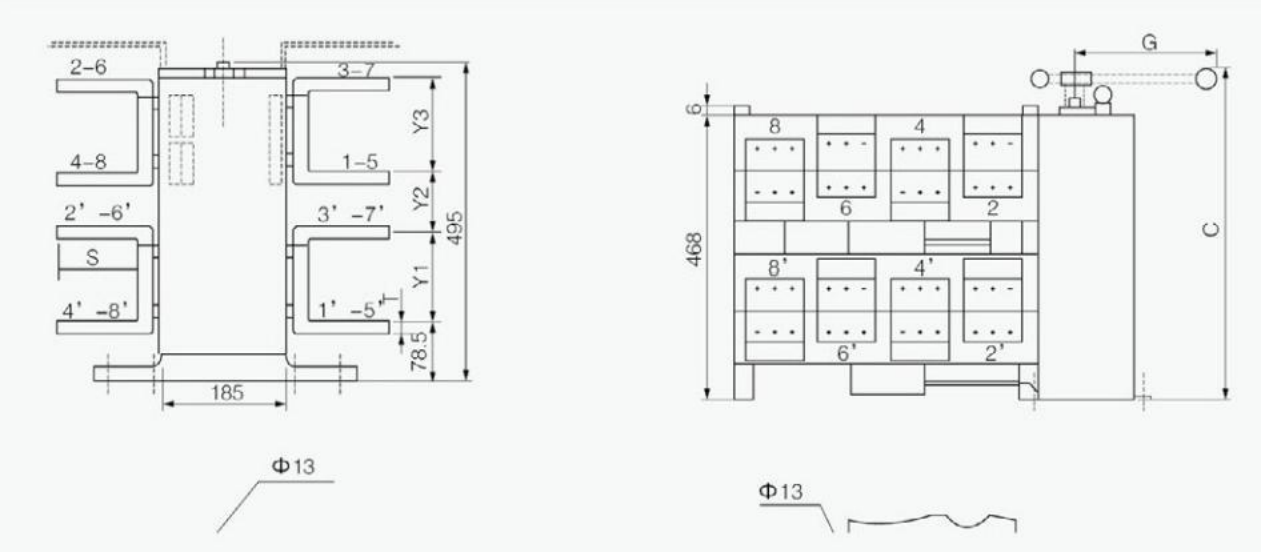

	Size							Switch Installation					Terminal								
Spec	A	A1	B	C	E	G	H	J	K	L	N	O	P	R	S	T	U	V	Y	Y1	Y3
2000A	1007	633	455	562	495	470	53	467	220	11	84.5	524	120	80	80	10	250	33	147	84	147
2500A	1007	633	455	562	495	470	28	467	220	11	84.5	524	120	80	100	10	250	13	152	79	152
3200A	1007	633	505	562	495	470	28	467	220	11	84.5	524	120	100	100	14	250	13	152	79	152

Wiring Instruction

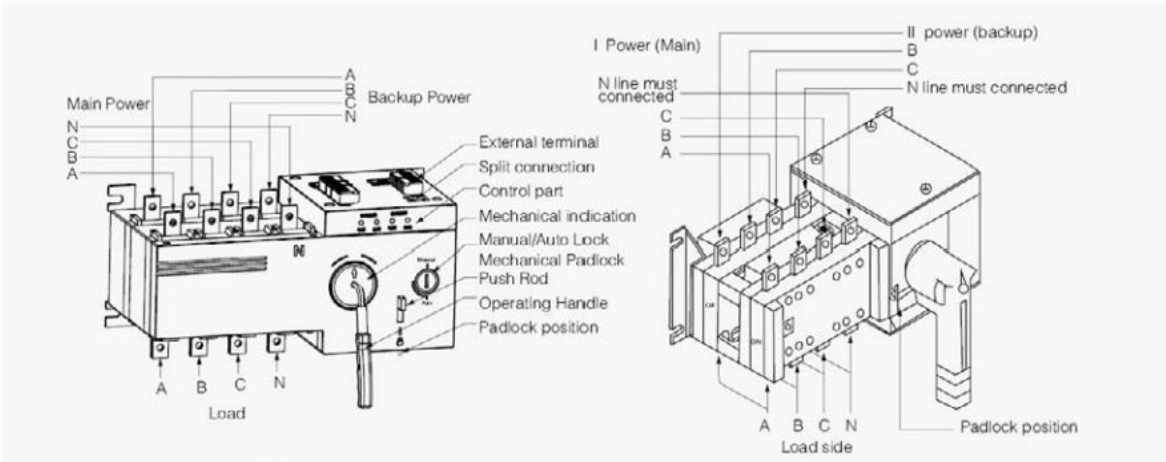

XLDS2-100~630 XLDS2-1000~3200

XLDS2 Series

XLDS2-100-630A Auto Transfer Switch Control And Operation (Suitable For Rated Current 16A~630A)

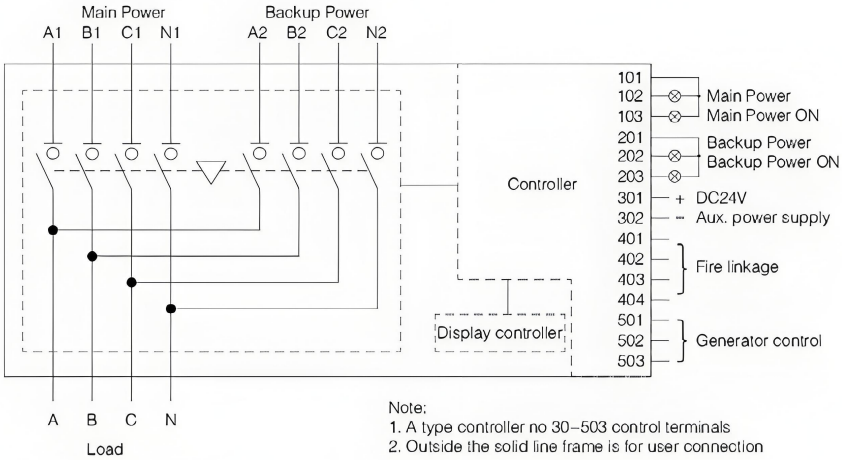

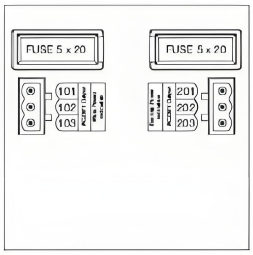

A type Controller

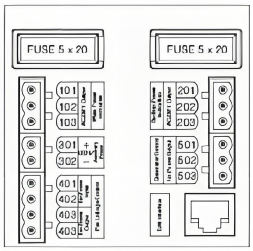

B Type Controller

101~103:main power external indicator signal(Active AC230V/0.5A)

101-Indicator common null line 102-Main power indicator signal output 103-Main power ON signal output

201~203:Backup power external indicator signal(Active AC230V/0.5A)

201-Indicator common null line 202-Backup power indicator signal output 203-Backup power ON signal output

301~302:DC 24V aux.power input for generator start

301-DC24V positive input 302-DC24V negative input

401,404:Fire linkage control signal input and feedback signal output

401,402:Fire linkage control signal passive input,if the signal from fire-fighting equipment is an active signal, must first connect to a small relay,then connect the relay NO point to 401,402,after NO contact closed ATS transfer to OFF position.

403,404:Feedback signal for ATS transfer to OFF position cutoff the load power supply

Notes:when the fire linkage function is active,the ATS will stop working,if want the ATS to working again,must first clear up the fire-fighting signal and then switching the Auto/Manual control switch one time,the ATS will recovery normal working

501~503:Generator start control signal output

When the backup power is Auto start generator,users can connecting the 501~503 terminals to the generator controller to achieve the generator auto start function,inside 501~503 terminal,is a set of passive relay contact point,502 is the relay common terminal,503 is relay NC point,501 is relay NO point;when main power normal,501 and 502 is closed, 503 and 501 open,if main power failure 501 and 502 open,meanwhile 503 and 502 closed,to send generator start signal.

Dual Power Automatic Transfer Switch

XLDS2 Series

XLDS2-1000-1600A Auto Transfer Switch Control And Operation (Suitable For Rated Current 800A～1600A)

- Basic type terminals

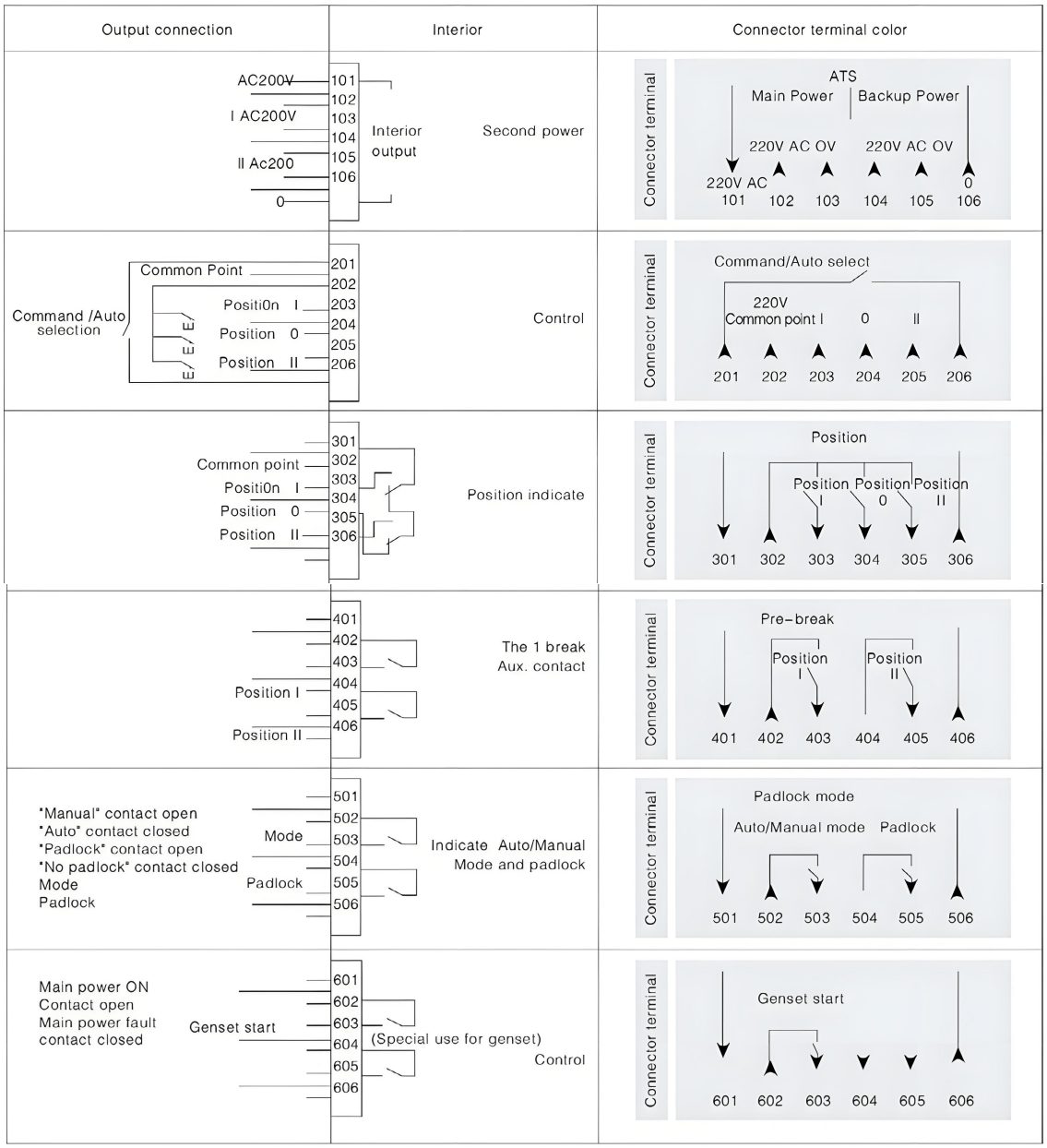

XLDS2 Series

Automatic Wiring Method (Suitable For Rated Current 800~3200A)

- HL1 Main power good indication;
- HL2 Backup power good indication;
- HD1 Main Power ON indication;
- HD2 Backup power ON indication;
- FU1/U2 is 2A fuse.
- 101-106, 201-206, 301-306 is RDS2 switch terminal.
- 401-406, 501-506 optional switch terminal for up 630A rating.

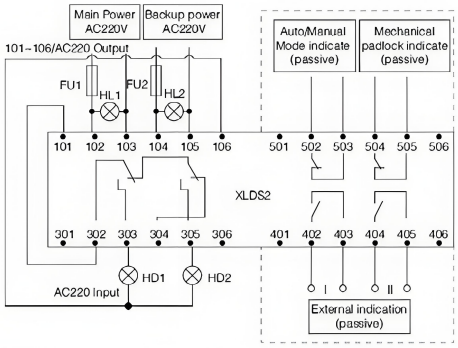

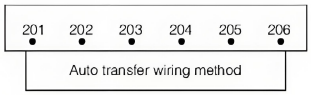

Auto+Forced Change "O"Position(For Rated Current 800~3200A) (Fire-Fighting Dual Power Source Off)Wiring Drawing
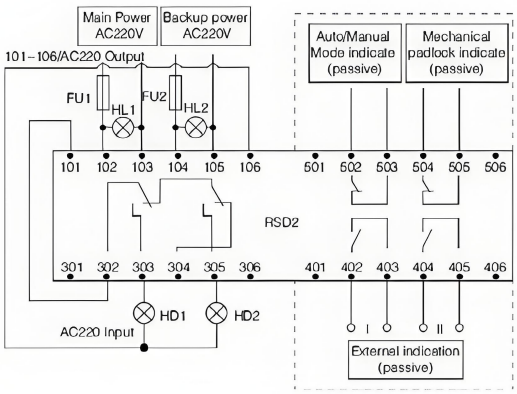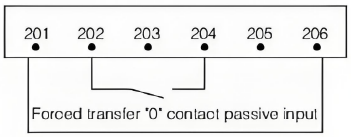
- HL1 Main power good indication;
- HL2 Backup power good indication;
- HD1 Main Power ON indication;
- HD2 Backup power ON indication;
- FU1/U2 is 2A fuse.
- 101-106, 201-206, 301-306 is RDS2 switch terminal.
- 401-406, 501-506 optional switch terminal for up 630A rating.