National High-Tech Enterprise

欣灵电气股份有限公司
XINLING ELECTRICAL CO.,LTD.
Address: No. 328, 19th Weilu Road, Yueqing Economic Development Zone, Zhejiang
Hotline: 0577-6273 5555
Fax: 0577-6273 5565
Website: www.c-lin.cn
Service Hotline: 400 8236 775

XLDW1 Series
Intelligent Universal Circuit Breaker
Xinling Electric / Operation Manual

Operation Manual

欣灵电气股份有限公司
XINLING ELECTRICAL CO.,LTD.

XLDW1 Series Intelligent Universal Circuit Breakers

Series Intelling

Untiversal Breakers

The XLDW1 Series Intelligent Universal Circuit Breaker (hereinafter referred to as the "Circuit Breaker") is suitable for AC 50Hz power distribution networks with a rated voltage up to 400V (690V) or lower and a rated current of 400A to 6300A.It is designed to distribute electrical energy and protect lines and power supply equipment from damage caused by overload, under-voltage, short circuit, single-phase grounding, and other faults.The circuit breaker features intelligent protection with precise selective tripping, which improves power supply reliability and avoids unnecessary power outages.It also comes with an open communication interface to support "four remote" functions (remote measurement, remote signaling, remote control, remote adjustment), meeting the requirements of control centers and automation systems.

When not equipped with an intelligent controller and sensors, this circuit breaker can be used as an isolator, marked as

The circuit breaker complies with standards including:

GB/T 14048.2 Low-voltage switchgear and controlgear - Part 2: Circuit-breakers

IEC 60947-2 Low-voltage switchgear and controlgear - Part 2: Circuit-breakers

Model Designation and Explanation

XL DW 1 - □ / □

- Pole Number (Marked with 4 for 4-pole configuration; not marked for 3-pole configuration)
- Rated Frame Current of the Circuit Breaker
- Design Serial Number
- Universal Circuit Breaker
- Enterprise Code

● Ordering Specifications

(Please tick √ in the box or fill in the number)

Customer		Quantity Ordered		Order Date	

Model

- □ XLDW1-2000[I Frame]
- □ XLDW1-3200[II Frame]
- □ XLDW1-4000[III Frame]
- □ XLDW1-6300[IV Frame]

□ Fixed Type □ Drawer Type

□ 3-pole □ 4-pole

Rated Current In = ____ A

Rated Voltage □AC380(400)V □AC660(690)V

	Type ("F" indicates Generator Protection)		Basic Functions		Optional Additional Functions or Accessories
Intelligent Controller	Type L	□L2	Long-time delay, instantaneous (3~10)In	1.Load bar graph indication 2.MCU operation monitoring 3.Fault status indication 4.Fault memory 5.Instantaneous trip test function	□ 1. MCR make/break and simulated tripping □ 2. Signal unit for pre-alarm, self-diagnosis, and OCR trip alarm
		□L3	Long-time delay, short-time delay (3~10)In, instantaneous (10~20)In [Frame I] / (7~14)In [Frame II]		
		□L4	Long-time delay, short-time delay (3~10)In, instantaneous (10~20)In [Frame I] / (7~14)In [Frame II], single-phase earth fault protection		
	Type M	□M	Long-time delay, short-time delay, instantaneous, single-phase earth fault protection	1.Various status indications and value display 2.Voltmeter 3.Ammeter 4.Fault memory 5.Thermal memory 6.Test function	□ 1.Load monitoring (Node 1 and Node 2) □ 2.Voltmeter □ 3.MCR make/break and simulated tripping □ 4.Signal unit for pre-alarm, self-diagnosis, and OCR trip alarm
		□M/F	Long-time delay, short-time delay, instantaneous, pre-alarm		
	Type H	□H	1.Long-time delay, short-time delay, instantaneous, overload protection; 2.Single-phase earth fault protection; 3.Various status indications and value display; 4. Ammeter; 5. Voltmeter; 6. Fault memory; 7. Thermal memory; 8. Test function; 9. RS485 serial port; 10. Alarm fault status		□ MCR make/break and simulated tripping □ RS485/232 converter □ DI module
		□H/F			
			□AC220V □AC380V		□DC110V □DC220V

Accessories	□ Undervoltage Release	□AC220V □AC380V			
		□ Instantaneous Undervoltage Release □ Instantaneous Undervoltage Release □1s □3s □5s			
	□ Shunt Trip Release	□AC220V	□AC380V	□DC220V	□DC110V
	□ Closing Solenoid	□AC220V	□AC380V	□DC220V	□DC110V
	□ Motorized Operating Mechanism	□AC220V	□AC380V	□DC220V	□DC110V
	□ Mechanical Interlock	□ Horizontal Interlock	□Vertical Interlock	□ Door Interlock	
	□Open Position Key Interlock	□ Lock	□ Key (Please fill in the quantity)		
	□ Door Frame				
	□ External Single-phase Earth Fault Current Transformer (CT)	□ Differential Type (3P+N) T □ Earth Current Type (3P+N) W			
	□ Power Transformer (for relays)	□~220V □~380V □-220V □-110V □~24V □-24V			
Connection	□ Horizontal Connection (Standard Supply) □ Vertical Connection				
Remarks					

○ If the user selects additional functions or accessories when choosing the controller, additional fees will apply separately.

○ The long-time delay setting value of the Type L controller decreases by 10% of In per step.

○ When the user selects the Type H controller, please specify which communication protocol it is based on; ① Proprietary communication protocol ② DP protocol ③ MODBUS protocol

○ The rated short-circuit breaking capacity and short-time withstand current of the circuit breaker are shown in Table 2. The arcing distance of the circuit breaker is "zero" (i.e., the circuit breaker has no external arcing).

Table 2

Rated frame current Inm(A)		2000	3200	4000	6300
Rated ultimate short-circuit breaking capacity Icu(kA)o-co	400V	80	100	100	120
	690V	50	65	65	82
Rated short-circuit making capacity nxIcu(kA)/cos φ	400V	176/0.2	220/0.2	220/0.2	264/0.2
	690V	105/0.25	143/0.2	143/0.2	187/0.2
Rated service short-circuit breaking capacity Ics(kA)o-co-co	400V	50	65	65	100
	690V	40	65	65	75
Rated short-time withstand current Icw(kA), 1s delay 0.4s, o-co	400V	50	65	65/80(MCR)	85/100(MCR)
	690V	40	50	50/65(MCR)	65/75(MCR)

Note: The breaking capacity for upper and lower incoming lines in the table is the same.

○ The maximum power loss of the circuit breaker is 360 W. The variation of its rated continuous current at different ambient temperatures is shown in Table 3.

Table 3

Ambient Temperature (°C)	Rated Current (A)						
	400A	630A	800A	1000A	1250A	1600A	2000A
40	400A	630A	800A	1000A	1250A	1600A	2000A
50	400A	630A	800A	1000A	1250A	1550A	1900A
60	400A	630A	800A	1000A	1250A	1550A	1800A

Note: The derating coefficient for 2500 A and above is 0.9, except that the 4000 A within the 6300 A frame does not require derating.

○ Protection characteristics and functions of the intelligent overcurrent controller;

○ Protection characteristics of the overcurrent controller;

○ The setting values Ir(I/I n) and errors of the controller are shown in Table 4.

Table 4

Long-time Delay Ir1	Delay		Instantaneous		Earth Fault		
	Ir2	Error	Ir3	Error	Ir4		Error
(0.4-1)In	(0.4-15)In	±10%	In-50kA(Inm=2000A) In-75kA (Inm=3200A~4000A) In-100kA(Inm=6300A)	±15%	Inm=2000~4000A (0.2~0.8)In (Inm=1200A, min. 160 A)	Inm=6300A (0.2~1.0)In	±10%

Note：When three-stage protection is required simultaneously, the setting values shall not overlap.

○ The inverse-time delay characteristic of the long-delay overcurrent protection is $I^2T_L=(1.5Ir1)^2tL$. The operating time for (1.05~2.0)Ir1 is shown in Table 5, with a time error of ±15%.

Table 5

1.05Ir1	1.3Ir1	1.5Ir1 Pick-up Time (s)	15	30	60	120	240	480
No operation for >2h	Operation within <1h	2.0Ir1 Operating Time (s)	8.4	16.9	33.7	67.5	135	270

Note: tL- Pick-up time of 1.5Ir1 for long delay, TL - Operating time of long delay.

Setting Method for L Type

1. Long Delay Setting
Rotate the Ir1 switch to set the current from (0.4－1) In.
Press the tL key to set the time to 30s, 60s, 120s, or 240s.
Rotate the Ir1 switch to the OFF position to exit this function.

2. Short Delay Setting
Rotate the Ir2 switch to set the current from (3－10) In.
Press the ts key to set the time to 0.2s or 0.4s.
Rotate the Ir2 switch to the OFF position to exit this function.

3. Instantaneous Setting
Rotate the Ir3 switch to set the current from (3－10) In, (10－20) In, or (7－14) In.
Rotate the Ir3 switch to the OFF position to exit this function.

4. Earth Fault Protection Setting
Rotate the Ir4 switch to set the current from (0.2－0.8) In.
Press the tG key to set the time to 0.2s, 0.4s, 0.6s, or 0.8s.
Rotate the Ir4 switch to the OFF position to exit this function.

5. Controller Enters Operation State
After all controller parameters are adjusted, press the [Confirm] key.

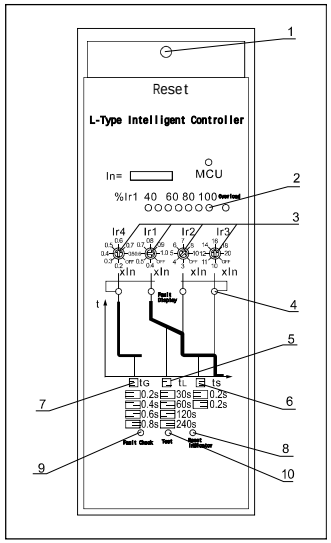

L-Type Intelligent Controller

g. MCR Tripping and Simulated Tripping Protection Function

Can be turned off as required by the user, and generally needs to be disabled when performing short-delay breaking tests.

① MCR Making & Breaking Protection is mainly used when closing under line fault conditions (instantly upon controller power-on). The controller is capable of breaking the circuit breaker at low-multiple short-circuit currents. The factory setting is 10kA with an error of ±20%, and the setting current can be customized per user requirements.

② The controller is equipped with a function where, during extremely high short-circuit currents, the tripping signal is sent directly without processing by the main control chip.

h. Thermal Memory Function

After the controller trips due to overload or short-circuit delay, and before it is powered off, it retains a memory function that simulates bimetallic strip characteristics.

Overload energy is fully released within 30 minutes.

Delay energy is fully released within 15 minutes.

If an overload or short-duration fault occurs during this period, the tripping time will be shortened. When the controller is powered off, the energy is automatically reset to zero.

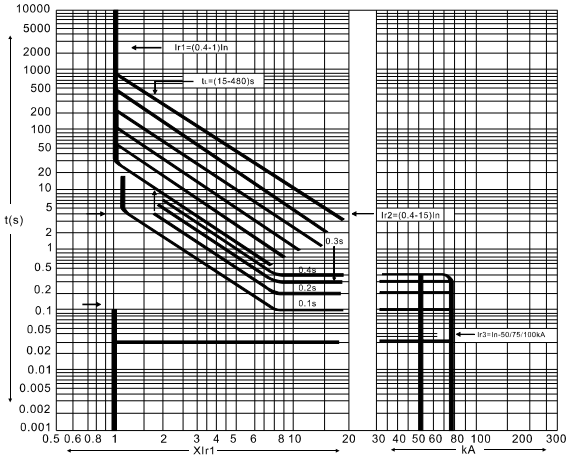

Figure 1: Overcurrent Trip Protection Characteristic Curve

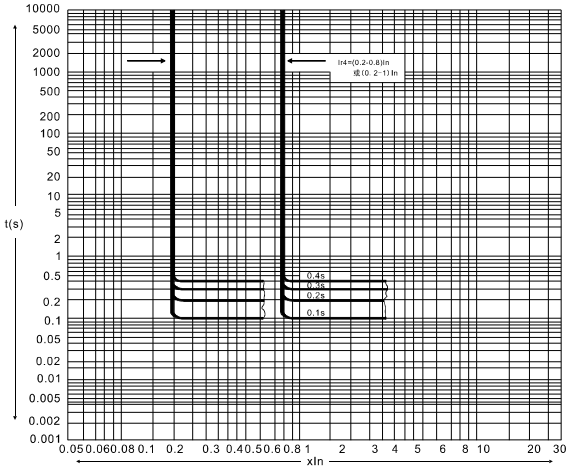

Figure 2: Earth Fault Protection Characteristic Curve

M-Type or H-Type Intelligent Controller

1.Reset Button：If the circuit breaker needs to be closed again after tripping,the reset button must be pressed; otherwise, the circuit breaker cannot be closed.

2.Current (Voltage) and Time Display：Displays current (voltage) values or time values.

3."Select" Key：In normal operation: Cycles through and displays various current (voltage) values.In fault or fault check mode: Cycles through and displays fault current or time values.

4.LED Indicator：Indicates various device states and categories.

5."Clear Lamp" Key：Must be pressed after controller setting, test fault, or before closing the circuit breaker to restore the controller to normal operation.

6."Setting" Key：Used to check or set protection characteristic currents and times. Pressing this key cycles through different setting states.

7."Fault Check" Key：After clearing the controller (via the "Clear Lamp" key), this key displays the last fault state, fault current, and time value. Use the "Select" key to cycle through fault details.

8."Trip" / "No Trip" Keys：Used for test functions.

9."Store" / "+" / "-" Keys：Used to set current or time values.

Ir4 – Earth Fault Protection Current Setting Value

Ir1 – Long Delay Current Setting Value

Ir2 – Short Delay Current Setting Value

Ir3 – Instantaneous Current Setting Value

tG – Earth Fault Protection Time Setting Value

tL – Long Delay Time Setting Value

tS – Short Delay Time Setting Value

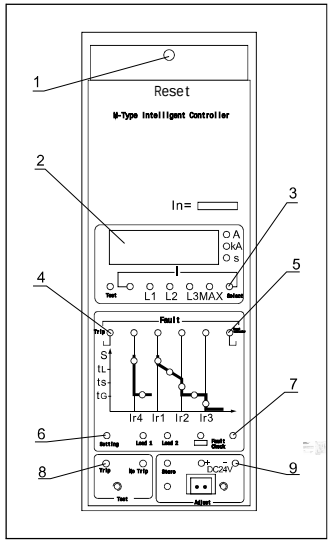

M-Type Intelligent Controller

H-Type Intelligent Controller

In addition to all the functions of the M-Type, it is also equipped with a serial communication interface, through which a master-slave structured local area system (hereinafter referred to as "the system") can be formed. The system consists of 1-2 computers as master stations and several intelligent circuit breakers or other communication interface devices as slave stations. The system network structure is shown in the following diagram.
For circuit breaker units, the system can realize long-distance "Four Remote" functions, including:
Monitoring of various power grid parameters and operating parameters
Display of the current operating status of intelligent circuit breakers
Adjustment and downloading of various protection limit parameters
Control of opening and closing operations of intelligent circuit breakers
This system is suitable for the construction and renovation of power distribution monitoring systems in various scenarios, such as power stations, power plant auxiliary power systems, medium and small substations, industrial and mining enterprises, and buildings.
The connection diagram of the dedicated communication protocol interface is as follows:

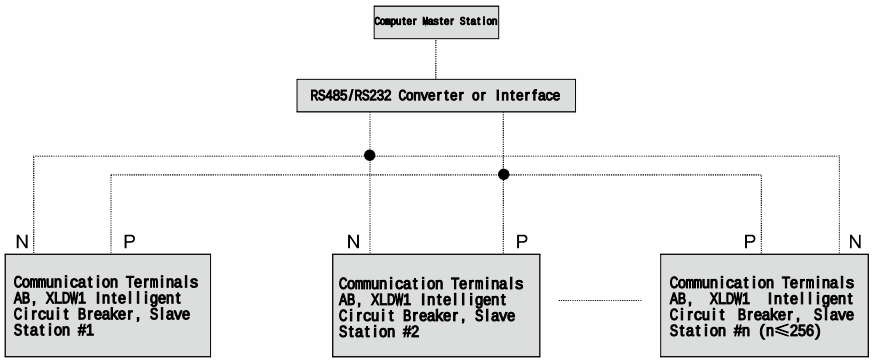

The connection diagram of circuit breaker products based on the universal DP protocol is as follows:

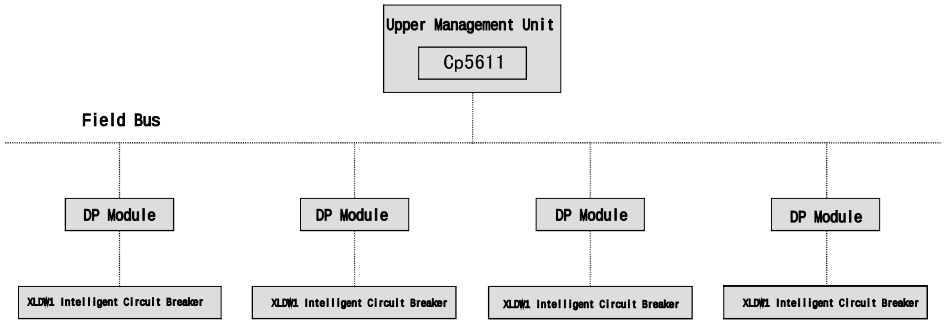

● System Composition

a. Hardware Structure of the Data Communication Network System
The intelligent circuit breaker provides a standard RS485 communication interface, which is led out from terminals 10 and 11 of the circuit breaker.
Communication medium for system connection: Type A shielded twisted pair.

Installation, Operation and Maintenance

● Installation

○ Before installation, check whether the specifications of the circuit breaker meet the requirements.

○ Before installation, use a 500V megohmmeter to check the insulation resistance of the circuit breaker. The insulation resistance shall not be less than 10 MΩ when the ambient temperature is 20℃±5℃ and relative humidity is 50%-70%. If not, dry the circuit breaker and only put it into use after the insulation resistance meets the requirements.

○ When installing the circuit breaker, its base shall be placed horizontally and fixed with M10 screws.

○ During installation, provide reliable protective grounding for the circuit breaker, with a clear grounding mark at the grounding point.

○ The technical performance of the circuit breaker remains unchanged regardless of whether it is connected via upper or lower incoming lines.

○ After installation, wire the circuit breaker in accordance with the relevant wiring diagram.

○ Operational Tests Before Energizing the Main Circuit
(Perform these tests when the indicator on the drawer base of the draw-out circuit breaker shows the "Test Position")

Voltage Check: Verify that the voltages of the undervoltage release, shunt release, energy-release (closing) electromagnet, and electric operating mechanism match the rated values. (The undervoltage release must be energized before the circuit breaker closes.)
Manual Energy Storage Test: Toggle the handle on the faceplate up and down 7 times. When the panel displays "Energy Stored" and a "click" sound is heard, energy storage is complete. Press the "1" button or energize the energy-release (closing) electromagnet to close the circuit breaker reliably. (If the controller's reset button is properly reset, toggling the handle again will re-initiate energy storage.)
Motor-Driven Energy Storage Test: Energize the motor until the faceplate displays "Energy Stored" and a "click" sound is heard, indicating energy storage completion. The motor will automatically de-energize. Press the "1" button or energize the energy-release (closing) electromagnet to close the circuit breaker reliably.
Trip Test: After the circuit breaker is closed, it shall trip successfully when triggered by the undervoltage release, shunt release, "O" button on the faceplate, or the trip test function of the intelligent controller.

● Application of the Intelligent Controller

○ Controller Setting

Long-time Delay Current Setting :Press the "Clear Lamp" key, then press the "Set" key until the long-time delay status indicator lights up, displaying the factory default long-time delay current setting value (typically In). The current setting range is (0.4~1.0) In. Press the "+" and "-" keys to adjust the value until it is closest to the required current. Then press the "Store" key once: the store indicator will light up briefly and then go out, indicating that the long-time delay current setting has been saved.

Long-time Delay Time Setting: After completing the long-time delay current setting, press the "Set" key again. The long-time delay time status indicator will light up, displaying the factory default long-time delay time setting value. Press the "+" key to double the time with each press; if the time is too long, press the "-" key to halve the time with each press. Adjust until the value is closest to the required time, then press the "Store" key once: the store indicator will light up briefly and then go out, indicating that the long-time delay time setting is complete.The setting methods for the action values and action times of other protection functions (Load Monitoring, Short-time Delay, Instantaneous, Earth Fault Protection, etc.) are identical to the above, with each function corresponding to a different status indicator. When the earth fault time setting is set to "OFF", it indicates a fault state where the earth fault protection will only trigger an alarm and not cause a trip. Setting the instantaneous protection to "OFF" will disable this protection function. During the setting process, if a fault signal is detected, the controller will automatically lock its functions and enter the fault handling state.

L-Type Intelligent Controller

○ The L-type controller uses coding switches and toggle switches for setting, and features four-stage protection: long-delay for overload, short-delay for short circuit, instantaneous protection, and earth leakage protection. It also includes functions such as fault status and load current light bar indication, but lacks a digital display. Its functions are less comprehensive than those of Type M and Type II, making it suitable for general application scenarios.

○ Operating performance of circuit breakers: The operating performance of circuit breakers is indicated by the number of operating cycles, see Table 7.

Table 7

Rated Current of Frame Class (A)	Total Number of Operating Cycles
2000	10000
3200、4000	5000
6300	2000

○ The operating voltage and required power of the shunt release, undervoltage release, motor operating mechanism, energy release (closing) electromagnet, and intelligent controller of the circuit breaker are shown in Table 8.

Table 8

Required Power / Item \ Rated Operating Voltage			AC (50Hz)		DC	
			220V	380V	110V	220V
Shunt Release			24VA	36VA	24W	24W
Undervoltage Release			24VA	36VA	–	–
Closing Electromagnet			24VA	36VA	24W	24W
Motor Operating Mechanism	Rated Current of Circuit Breaker Frame Class	2000A	85VA	85VA	85W	85W
		3200A、4000A	110VA	110VA	110W	110W
		6300A	150VA	150VA	150W	150W
Power Supply Voltage of Intelligent Controller			AC220V、AV380V、DC220V、DC110V			

Note: The reliable operating voltage range for the shunt release is 70%－110%, and for the closing electromagnet and operating mechanism, it is 85%－110%.

○ The performance of the undervoltage release of the circuit breaker is shown in Table 9.

Table 9

Category		Undervoltage Time-Delay Release	Undervoltage Instantaneous Release
Release Operating Time		Time delay: 1.3s	Instantaneous
Release Operating Voltage Value	30%~70%Ue	The circuit breaker can reliably trip	
	≤35%Ue	The circuit breaker cannot close	
	(80~110%)Ue	The circuit breaker can reliably close	
If the power supply voltage recovers to 85%Ue within 1/2 of the delay time		The circuit breaker does not trip	

Note: The delay time accuracy is ±10%.

Performance of Auxiliary Contacts

○ The conventional heating current of the auxiliary contacts is 6A.

○ The auxiliary contacts are configured as 4 normally open and 4 normally closed.

○ The auxiliary contacts have the capability of abnormal making and breaking.

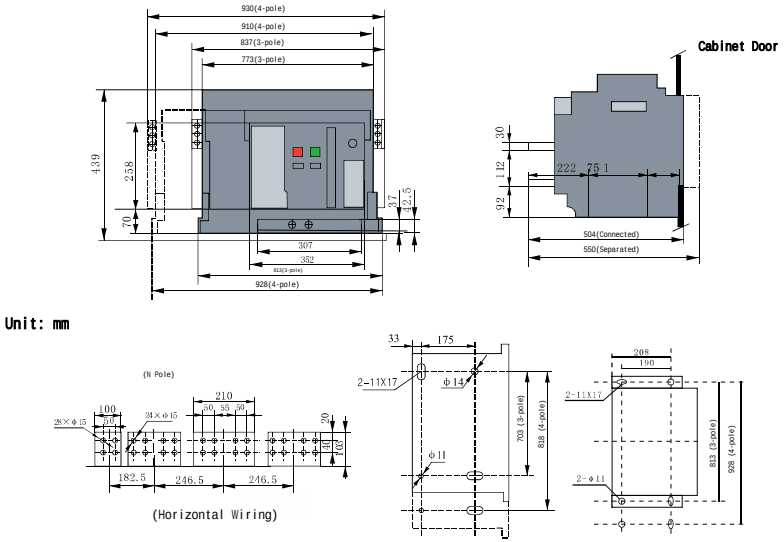

Figure 14 Installation Dimensions and Outline Dimensions of Drawer-Type Circuit Breaker (XLDW1-6300, 6300/4 In=4000A, 5000A)

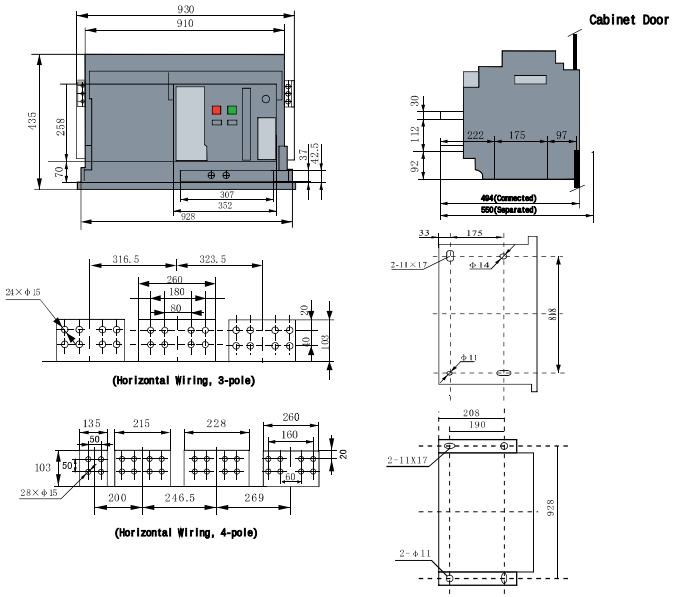

Figure 15 Installation Dimensions and Outline Dimensions of Drawer-Type Circuit Breaker (XLDW1-6300 In=6300A)

○ The lever interlock is shown in Figure 5(a).

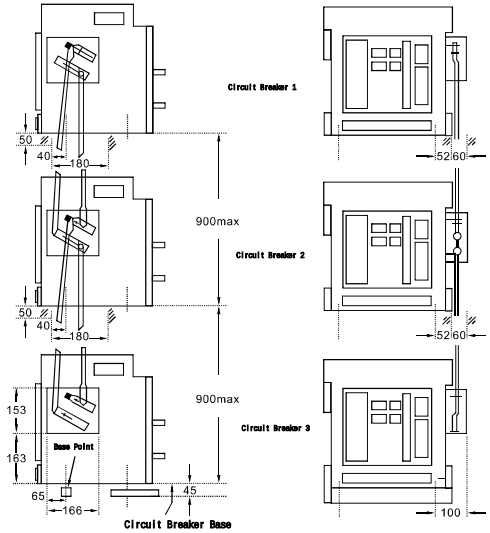

● Between Two Circuit Breakers

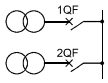

Emergency Power Supply	Normal Power Supply
1QF	2QF
0	0
0	0
1	1

● Between Three Circuit Breakers

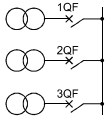

Emergency Power Supply	Normal Power Supply	Normal Power Supply
1QF	2QF	3QF
0	0	0
1	0	0
0	1	0
0	0	1

● Between Three Circuit Breakers

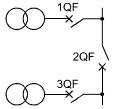

Emergency Power Supply	Transfer Power Supply	Normal Power Supply
1QF	2QF	3QF
0	0	0
1	0	0
0	1	0
0	0	1
1	1	0
0	1	1
1	0	1

Figure 5(a)

Note: This applies to 3 vertically installed circuit breakers interlocked by levers. If only 2 circuit breakers need to be interlocked, simply remove the topmost circuit breaker.

○ The soft interlock (available for both horizontal and vertical installation) is shown in Figure 5(b).

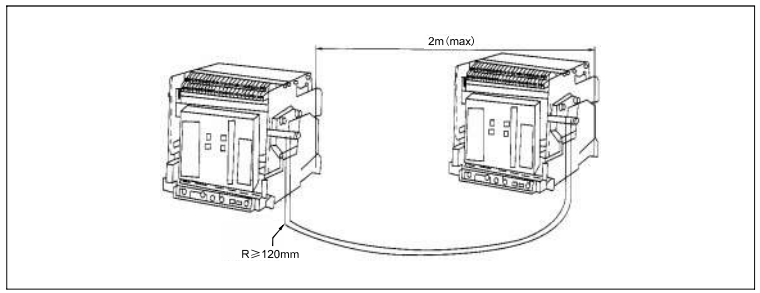

Figure 5(b)

○ The installation dimensions and outline dimensions of the drawer-type circuit breaker are shown in Figures 10－15.

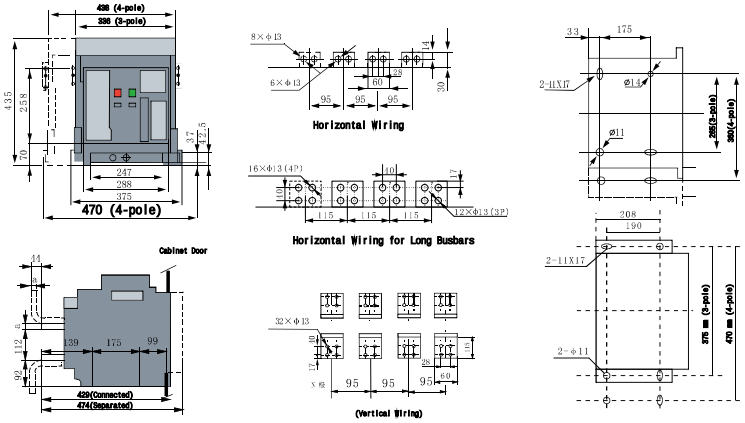

Unit: mm

In	200-630A	800-1600A	1900-2000A
a	10	15	20

Figure 10 Installation Dimensions and Outline Dimensions of Drawer-Type Circuit Breaker (XLDW1-2000, 2000/4)

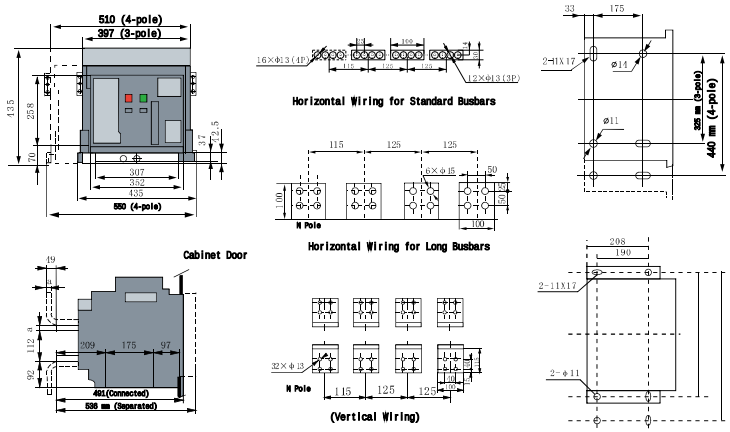

Unit: mm

In	2000A、2500A	2900A、3150A、3200A
a	20	30

Figure 11 Installation Dimensions and Outline Dimensions of Drawer-Type Circuit Breaker (XLDW1-3200, 3200/4)

XLDW1 3-Pole Circuit Breaker

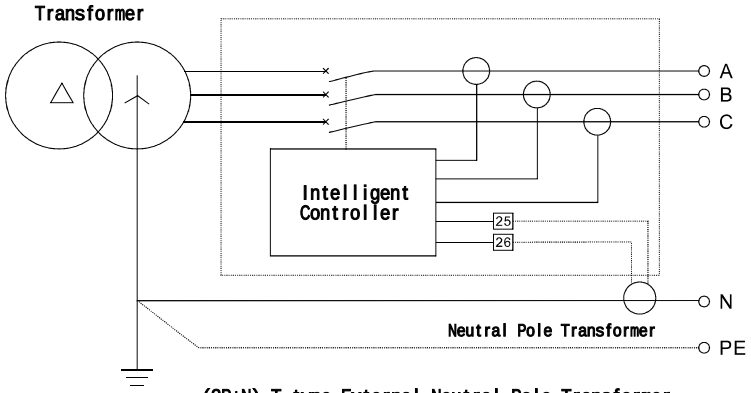

(3P+N) T-type External Neutral Pole Transformer

Differential Earth Fault Protection, where the signal is derived from the vector sum of the three-phase power supply and N-phase current

XLDW1 3-Pole or 4-Pole Circuit Breaker

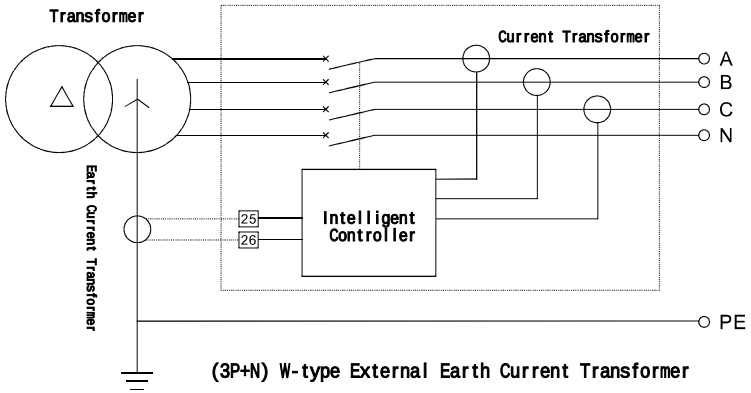

(3P+N) W-type External Earth Current Transformer

Earth Current Type Earth Fault Protection, where the signal is directly taken from between the neutral point of the main power supply and earth

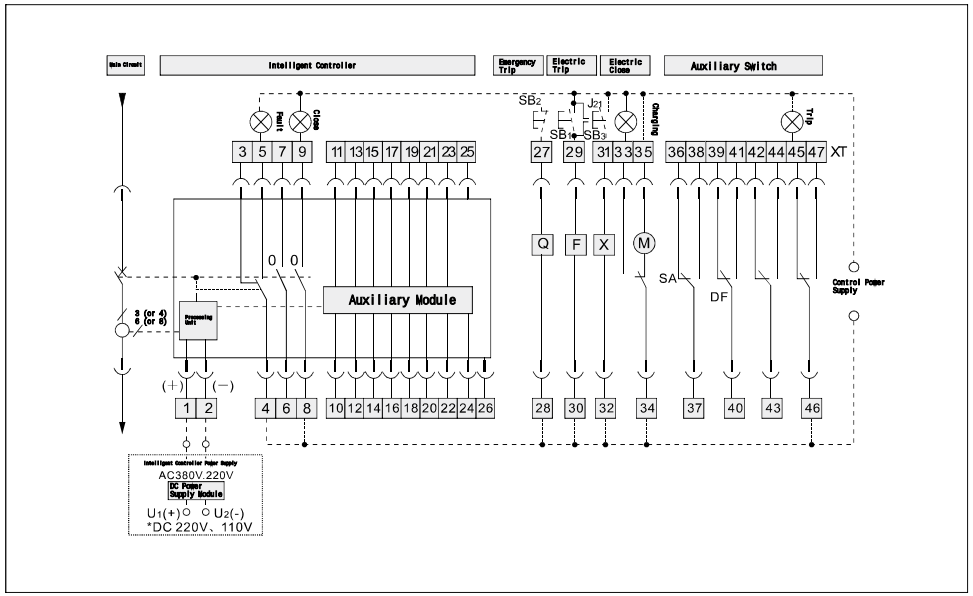

Figure 7C (Controller Type M with Additional Functions or Type H)

Notes:

1. If the control power supply voltages for Q, F, X, and M are different, they shall be connected to separate power supplies respectively.
2. Terminal #5 can be directly connected to the power supply for automatic charging, or connected to the power supply in series with a normally open pushbutton (manual charging).
3. If requested by the user, terminals 6–#7 can output a normally closed contact.
4. Additional accessories shall be provided by the user.
5. The relay contact J21, connected in parallel with SB1, can be used for remote tripping.
6. *When the operating power supply of the intelligent controller is DC, a DC power supply module must be added (in this case, terminals #1 and #2 must not be connected to AC power). The secondary wiring is as shown in the diagram [DC power supply DC 110V or 220V (U1(+), U1(-)) input, two sub-module output contacts (provided by the user) with the negative terminal connected to 2(-)].

SB1 - Shunt Trip Pushbutton (provided by user)
SB2 - Undervoltage Trip Pushbutton (provided by user)
SB3 - Close Pushbutton (provided by user)
X - Closing Solenoid
M - Charging Motor
XT - Terminal Block
DF - Auxiliary Contact
F - Shunt Trip Coil
SA - Motor Microswitch
Q - Undervoltage Release or Time-Delay Undervoltage Release
O - Normally Open Contact (3A/AC 380V)
⊗ - Signal Light (provided by user)

Notes:

- If the control power supply voltages for Q, F, X, and M are different, they shall be connected to separate power supplies respectively.
- Terminal #35 can be directly connected to the power supply (automatic pre-charging), or connected to the power supply in series with a normally open pushbutton (manual pre-charging).
- If requested by the user, terminals #6－#7 can output a normally closed contact.
- Additional accessories shall be provided by the user.
- The relay contact J21, connected in parallel with SB1, can be used for remote tripping.
- *When the operating power supply of the intelligent controller is DC, a DC power supply module must be added (in this case, terminals #1 and #2 must not be connected to AC power). The secondary wiring is as shown: DC power supply (DC 110V or 220V) input from U1(+) and U2(-); the positive terminals of the two outputs of the power supply module are connected to 1(+), and the negative terminals to 2(-).

SB1 - Shunt Trip Pushbutton (provided by user)
SB2 - Undervoltage Trip Pushbutton (provided by user)
SB3 - Close Pushbutton (provided by user)
X - Closing Solenoid
M - Charging Motor
XT - Terminal Block
DF - Auxiliary Contact
F - Shunt Trip Coil
SA - Motor Microswitch
Q - Undervoltage Release or Time-Delay Undervoltage Release
O - Normally Open Contact (3A/AC 380V)
⊗ - Signal Light (provided by user)

- Other Wiring of the Intelligent Controller

#1, #2 AC Operating Power Supply Input (for DC, input from DC power supply module U1, U2)
#12 Overload Pre-Alarm Signal Output
#14 Instantaneous Short-Time-Delay Trip Signal Output
#15 Long-Time-Delay Trip Signal Output
#16 Earth (or Neutral) Fault Trip Signal Output
#19 Common Line for Signal Outputs
#20 Self-Diagnosis Signal Output
#21 Trip Signal (for shunt trip or undervoltage actuators)
#25, 26 External Neutral Pole or Earth Current Transformer Input

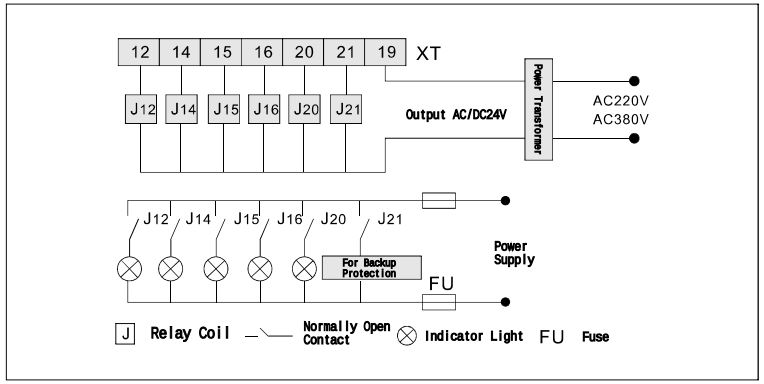

Wiring Diagram of Relay for Circuit Breaker Additional Functions

1) The controller signals drive the external relay J via terminals 12, 14~16, 20, 21 to output contact action signals externally.
2) The power transformer (the user shall specify the input voltage value in the order specification) is provided by the manufacturer. The power transformer can be inserted into the standard DIN rail together with the relay base, and installed by the user at a suitable position in the switchgear cabinet.
3) Relay model: HH62P, AC/DC24V, provided by the user.
4) Self-diagnosis signal output conditions:
a. Internal temperature of the controller > 80°C;
b. Abnormal operation of the chip;
c. Controller power loss
The user can select J12, J14~J16, J20, J21 according to their actual needs.

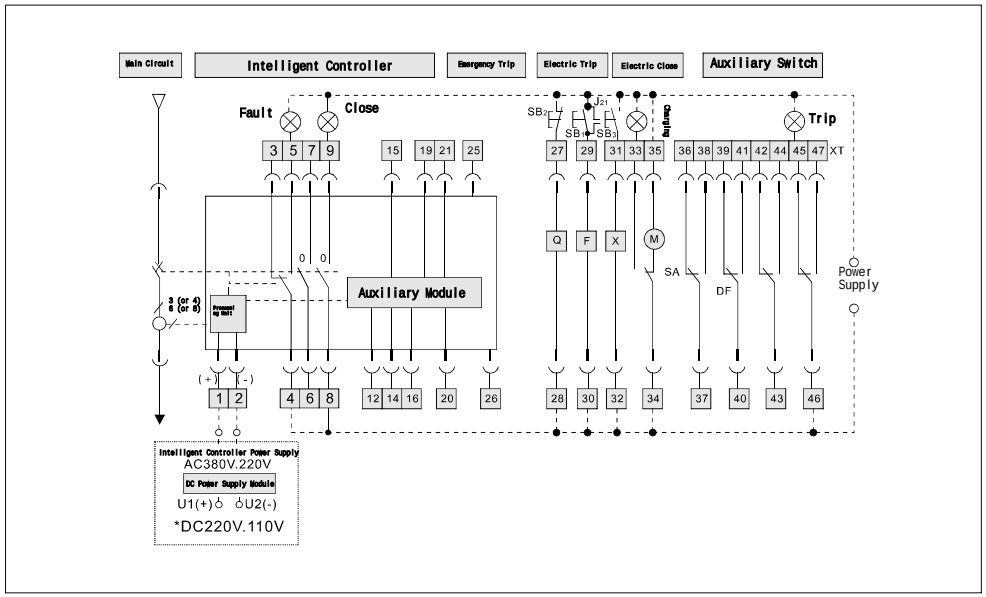

Figure 7B (Controller Type L with Additional Functions)

Notes:

- If the control power supply voltages for Q, F, X, and M are different, they shall be connected to separate power supplies respectively.
- Terminal #35 can be directly connected to the power supply (automatic pre-charging), or connected to the power supply in series with a normally open pushbutton (manual pre-charging).
- If requested by the user, terminals #6－#7 can output a normally closed contact.
- Additional accessories shall be provided by the user.
- The relay contact J21, connected in parallel with SB1, can be used for remote tripping.
- *When the operating power supply of the intelligent controller is DC, a DC power supply module must be added (in this case, terminals #1 and #2 must not be connected to AC power). The secondary wiring is as shown: DC power supply (DC 110V or 220V) input from U1(+) and U2(-); the positive terminals of the two outputs of the power supply module are connected to 1(+), and the negative terminals to 2(-).

SB1 - Shunt Trip Pushbutton (provided by user)
SB2 - Undervoltage Trip Pushbutton (provided by user)
SB3 - Close Pushbutton (provided by user)
X - Closing Solenoid
M - Charging Motor
XT - Terminal Block
DF - Auxiliary Contact
F - Shunt Trip Coil
SA - Motor Microswitch
Q - Undervoltage Release or Time-Delay Undervoltage Release
O - Normally Open Contact (3A/AC 380V)
⊗ - Signal Light (provided by user)

○ Other Wiring of the Intelligent Controller

#1, #2 AC Operating Power Supply Input (for DC, input from DC power supply module U1, U2)
#10 RS485 Communication P Terminal } (Half-duplex) Remote Adjustment and Signaling
#11 RS485 Communication N Terminal } (Half-duplex) Remote Control and Telemetry, etc.
#12 Overload Pre-Alarm Signal Output
#13 Communication Remote Shunt Trip Output
#14 Instantaneous Short-Time-Delay Trip Signal Output or Communication Remote Close Output
#15 Long-Time-Delay Trip Signal Output or Communication Remote Charging Output
#16 Earth (or Neutral) Fault Trip Signal Output
#17 Load Shedding 1 Signal Output
#18 Load Shedding 2 Signal Output
#19 Common Line for Signal Outputs
#20 Self-Diagnosis Signal Output
#21 Trip Signal (for shunt trip or undervoltage actuators)
#22 Voltage Signal Phase A
#23 Voltage Signal Phase B
#24 Voltage Signal Phase C
} Directly input from the main circuit
#25, 26 External Neutral Pole or Earth Current Transformer Input

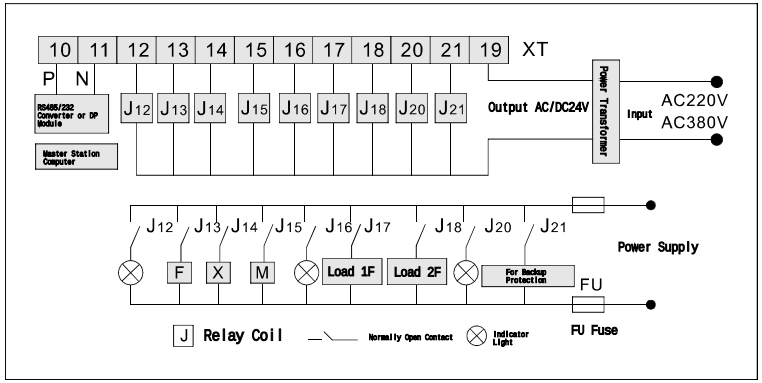

Wiring Diagram of Relay for Circuit Breaker Additional Functions

1.The controller's signal output drives the external relay J via terminals 12~18, 20, 21 to output contact action signals externally.
2.The RS485/232 converter, DP module, and power transformer (the user shall specify the input voltage value in the order specification) are provided by the manufacturer. The power transformer can be inserted into the standard DIN rail together with the relay base, and installed by the user at a suitable position in the switchgear cabinet.
3.Relay model: HH62P, AC/DC24V, provided by the user.
4.The master station computer is provided by the user.
5.Terminals 13 can output signals for remote trip, close, and charging via communication. The trip signals from terminals 14 and 15 will no longer be output at this time. The normally open contacts of the corresponding relays are connected in parallel with the manually controlled pushbuttons, enabling both manual and remote control. If remote control is not required, the normally open contacts of relays J14 and J15 can be connected in series with the two indicator lights to output corresponding signals. Please specify in the order specification whether remote control is needed; the manufacturer will determine the functions output by terminals 14 and 15 accordingly. Terminal 21 outputs the relay J21 for backup protection.
6.Self-diagnosis signal output conditions:
a. Internal temperature of the controller > 80°C
b. Abnormal chip operation
c. Controller power loss
7.The user can select J12, J14~J16, J20, J21 according to actual needs.

○ External Single-Phase Earth Fault Protection Function

The external transformer (neutral pole transformer or earth current transformer) is provided to the user as an accessory. The user shall install it onto the busbar by themselves and connect the 2m-long cable to the secondary terminals #25 and #26 of the circuit breaker.
The dimensions of the center opening of the external transformer (maximum allowable passage of the through-type busbar) are shown in Table 12:

Table 12

Model	Width	Height
XLDW1-2000 XLDW1-4000/4	61	21
XLDW1-3200 and above (excluding XLDW1-4000/4)	87	31

Terminals

The circuit breaker has a total of 47 terminals, featuring simple wiring for user convenience. Refer to Figures 7A, 7B, and 7C for the wiring diagrams.

Figure 7A (Controller Type M or L with Basic Functions)

Other Wiring of the Intelligent Controller

#1, #2 AC Operating Power Supply Input (for DC, input from DC power supply module U1, U2)

#25, #26 External Neutral Pole or Earth Current Transformer Input

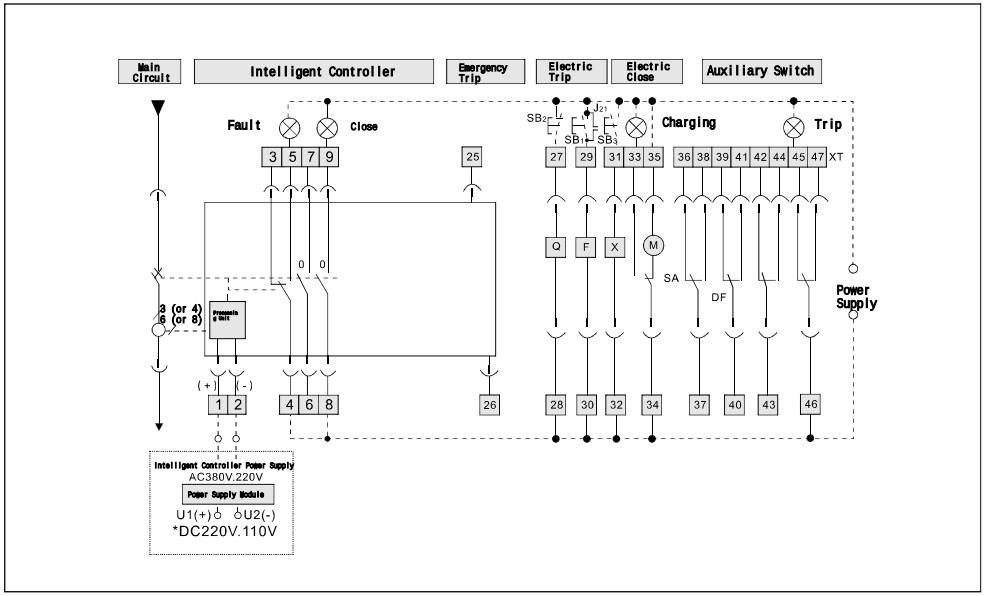

Figure 7A (Controller Type M or L with Basic Functions)

Outline and Installation Dimensions

◯ The installation and outline dimensions of the fixed circuit breaker are shown in Figure 8 and Figure 9.

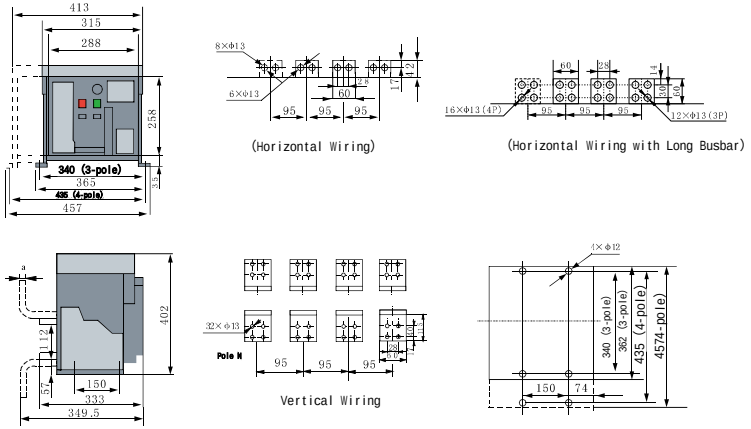

Unit: mm

In	200-630A	800-1600A	1900-2000A
a	10	15	20

Figure 8 Installation and Outline Dimensions of Fixed Circuit Breaker (XLDW1-2000, 2000/4)

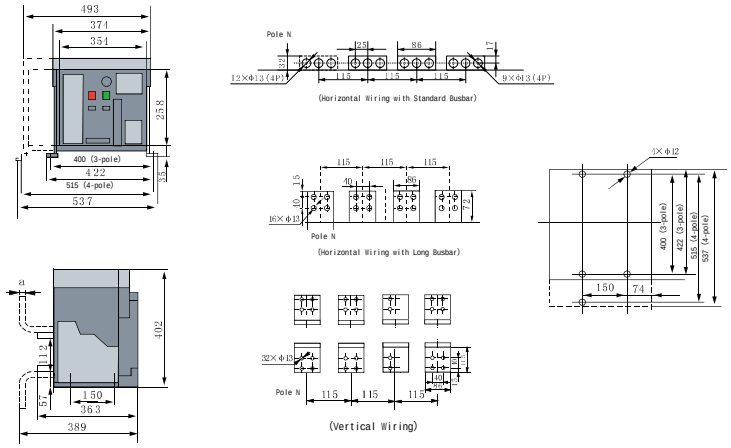

Unit: mm

In	2000A、2500A	2900A、3200A
a	20	30

Figure 9 Installation and Outline Dimensions of Fixed Circuit Breaker (XLDW1-3200, 3200/4)

◯ Earth Fault Protection Circuit

XLDW1 3-Pole Circuit Breaker

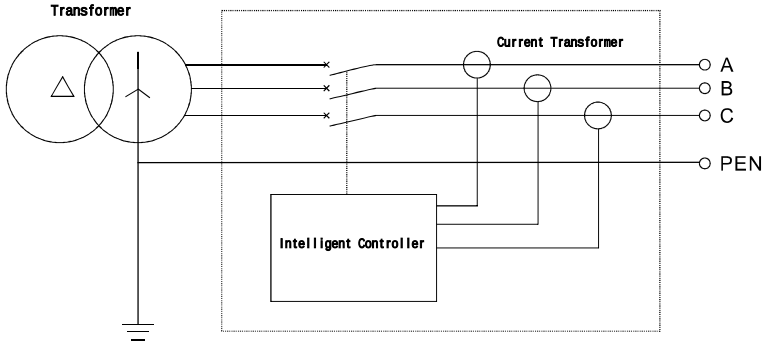

Type 3PT

Differential Earth Fault Protection, the signal only takes the vector sum of three-phase currents (three-phase unbalance)

XLDW1 4-Pole Circuit Breaker

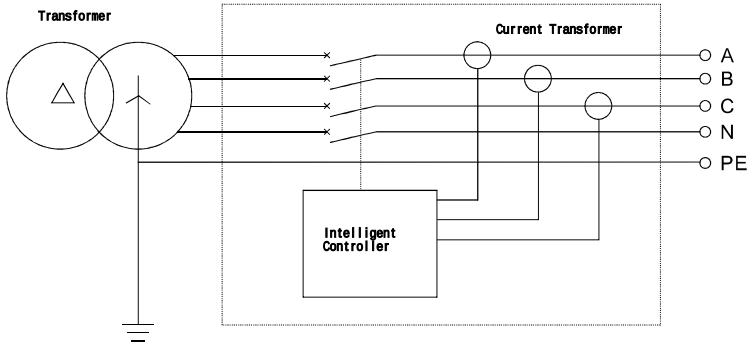

Type 4PT

Differential Earth Fault Protection, the signal takes the vector sum of three-phase currents and N-phase current

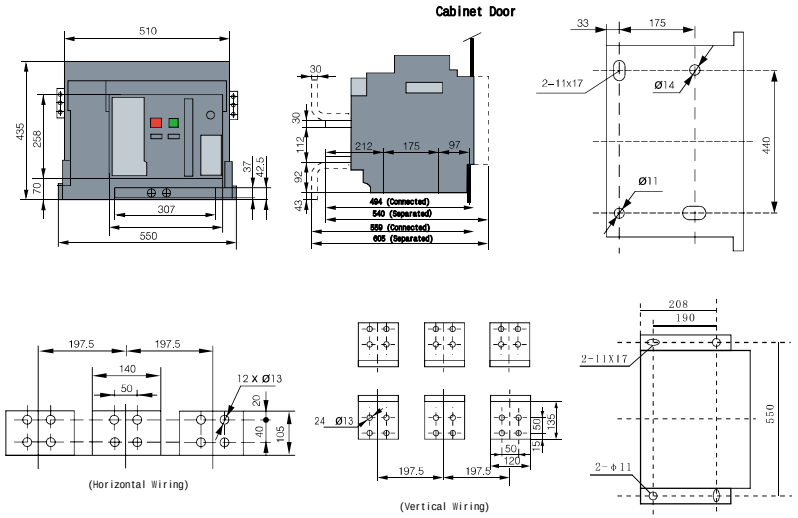

Figure 12 Installation and Outline Dimensions of Drawer-Type Circuit Breaker (XLDW1-4000)

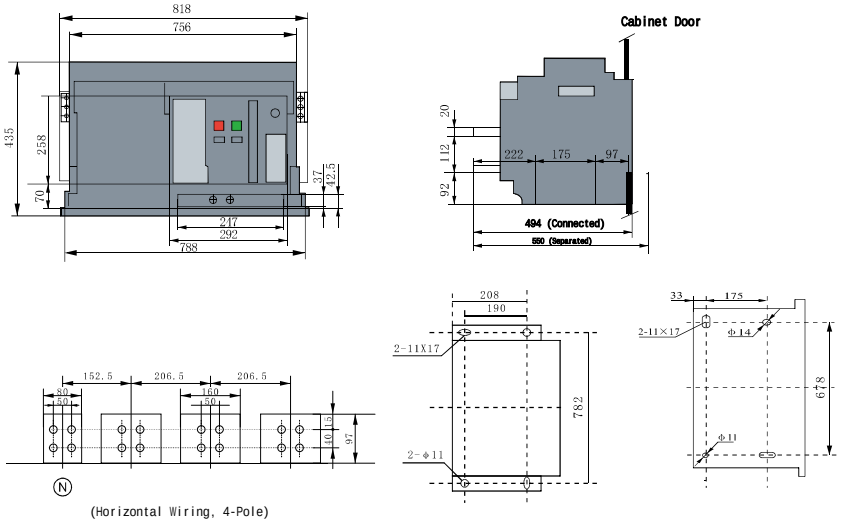

Figure 13 Installation and Outline Dimensions of Drawer-Type Circuit Breaker (XLDW1-4000/4)

○ The making and breaking capacity of auxiliary contacts under abnormal service conditions is shown in Table 10.

Table 10

	Making			Breaking			Number of Operating Cycles and Operating Frequency		
Utilization Category	I/Ie	U/Ue	cosφ or T0.95	I/Ie	U/Ue	cosφ or T0.95	Number of Operating Cycles	Number of Operating Cycles per Minute	Energization Time (s)
AC-15 DC-13	10 1.1	1.1 1.1	0.3 6Pe	10 1.1	1.1 1.1	0.3 6Pe	10	6 (or same as main circuit operating frequency)	0.05

Note: When Pe ⩾ 50W, the upper limit of T0.95 = 6Pe ⩽ 300ms.

○ The making and breaking capacity of auxiliary contacts under normal service conditions is shown in Table 11.

Table 11

Making				Breaking		
Utilization Category	I/Ie	U/Ue	cosφ or T0.95	I/Ie	U/Ue	cosφ or T0.95
AC-15 DC-13	10 1	1 1	0.3 6Pe	1 1	1 1	0.3 6Pe

○ Open Position Key Lock

The circuit breaker is equipped with an Open Position Key Lock accessory (supplied as per order requirements), which can lock the circuit breaker in the open position. In this state, the circuit breaker cannot be closed by either the closing button or the energy-releasing (closing) electromagnet.

Structure Overview

○ The fixed circuit breaker is mainly composed of the contact system, intelligent controller, manual operating mechanism, electric operating mechanism, and mounting plate.

○ The drawer-type circuit breaker is mainly composed of the contact system, intelligent controller, manual operating mechanism, electric operating mechanism, and drawer chassis.

○ The circuit breaker adopts a vertical layout, featuring a compact structure and small volume. The contact system is enclosed in an insulating base, with each phase contact also separated by an insulating plate to form individual compartments. The intelligent controller, manual operating mechanism, and electric operating mechanism are arranged in front as independent units, allowing a faulty unit to be removed and replaced as a whole.

○ The drawer-type circuit breaker consists of an inserted circuit breaker and a drawer chassis. The guide rails inside the drawer chassis can be pulled out, and the inserted circuit breaker sits on the rails to move in and out of the drawer. The main circuit is connected via the busbars on the inserted circuit breaker and the bridge contacts on the drawer chassis.

○ The drawer-type circuit breaker has three operating positions: Connected, Test, and Separated. Position changes are achieved by pushing or pulling the handle, and position indication is displayed via an indicator on the drawer chassis beam.

○ When in the Connected position, both the main circuit and secondary circuit are connected. When in the Test position, the main circuit is disconnected and isolated by an insulating barrier, with only the secondary circuit connected to allow necessary action tests. When in the Separated position, both the main circuit and secondary circuit are fully disconnected. Additionally, the drawer-type circuit breaker has a mechanical interlock, allowing closing only in the Connected or Test positions, and preventing closing in the intermediate position between Connected and Test.

○ The circuit breaker's interlock mechanism (applicable to both drawer-type and fixed-type) allows users to individually use the interlock mechanism for switching between two or three units, or to be equipped with the factory's XLDQ3 and XLDS2 series dual-power automatic transfer switching devices to realize automatic dual-power supply transfer. For details, refer to the product sample.

○ The specifications and quantities of user-connected copper busbars are shown in Table 13.

Table 13

Rated Current	External Copper Busbar Specification	Number of Bars per Pole	Rated Current	External Copper Busbar Specification	Number of Bars per Pole
630A	40X5	2	2900A	100X10	3
800A	50X5	2	3200A	120X10	3
1000A	60X5	2	3600A	120X10	4
1250A	80X5	2	4000A	120X10	4
1600A	100X5	2	5000A	120X10	5
2000A	100X5	3	6300A	120X10	6
2500A	100X5	4			

○ Door Frame Dimensions and Mounting Hole Spacing

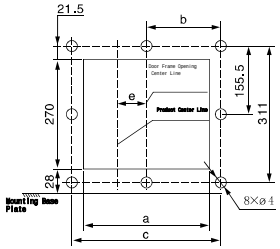

Fixed Type

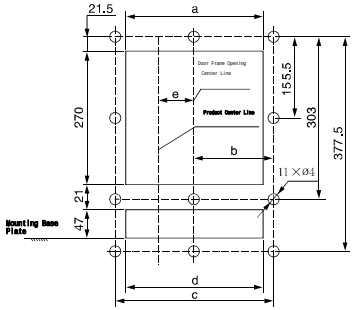

Drawer Type

Rated Current (Inm)

Inm	a	b	c	d	e (3-Pole)	e (4-Pole)
2000	306	172.5	345	263	0	47.5
3200	366	202.5	405	323	0	57.5
4000	366	202.5	405	323	57.5	206.5
6300	366	202.5	405	323	189 (for 4000, 5000 3-Pole)	
					246.5 (for 4000, 5000 4-Pole and 6300)	

b. Main Network Features

-Two-way serial data transmission: The product supports multiple communication protocols, including Low-Voltage Apparatus Data Transmission Protocol V1.0, PROFIBUS-DP, and MODBUS.

-Strict master-slave architecture: The master station initiates and controls communication, while slave stations can only communicate with the master station and cannot communicate directly with other slave stations.

-Communication parameters: The default baud rate is 9600 bit/s, with a maximum communication distance of 1.2 km. For PROFIBUS-DP applications, the typical baud rate can reach 187.5 kbit/s.

-Configuration software: The YSS 2000 configuration software can be customized to meet different project requirements, enabling configuration of monitoring and management systems. For intelligent circuit breakers, it supports real-time operation monitoring, control, and various daily management functions.

● System Functions

a. Remote Control

Remote control enables the master station computer to perform operational control (including energy storage, closing, and opening) on each slave station circuit breaker in the system.
The operator selects the target device from the system interface and clicks the remote control button, after which the system displays the current operating status of the selected device.
Once the operator enters the operation password, they can send a remote "close" or "open" command. The system transmits the command to the corresponding slave station circuit breaker, which then executes opening/closing, energy storage, and other operations in the predefined sequence, and reports the remote control result back to the master station.

b. Remote Adjustment

Remote adjustment refers to the configuration of protection setting values for slave stations via the master station computer.
The master station computer stores the protection setting value tables for all slave stations. The operator selects the target device from the system interface and clicks the remote adjustment button, and the system displays the current protection settings and the protection setting value table for the selected device.
After entering the operation password, the operator can select the required parameters from the parameter table and click the corresponding button. The master station then downloads the parameters to the target slave station and reports the adjustment result. Upon receiving the command, the slave station updates its own protection setting values.

c. Remote Measurement

Remote measurement enables the master station computer to perform real-time monitoring of power grid operating parameters at each slave station.
The communication slave station reports the following working parameters to the host computer:
Real-time phase current values of phases A, B, C, and N at each slave station
Voltage values of Uab, Ubc, and Uca

○ The fault recording function can log the following fault parameters:

Phase current values of A, B, C, and N at the time of the fault,Voltage values of Uab, Ubc, and Uca,Fault type
Fault action time.These fault records are stored in the fault database.

○ The computer displays the real-time current and voltage of each slave station using bar graphs and absolute value tables, and shows the operating status of each node via real-time curves.

d. Remote Signaling

Remote Signaling allows the master station computer to view information such as the slave station model, switch status (closed/open), protection setting values, and the operating and fault status of the slave station.
Parameters reported by the slave station circuit breaker to the host computer mainly include:
Switch model,Switch status (close/open),Fault information,Alarm information,Various protection setting values

e. Other System Functions

In addition to the four remote functions (remote measurement, signaling, control, and adjustment), the system also provides a variety of management functions:
Fault alarm (information screen, screen pop-up, event printing, fault dialing, audio alarm)
Event logging,Maintenance tagging,Shift handover management,Load trend analysis,Printing of various reports

The controller's various protection parameters must not be set crosswise. The protection priority of the controller is as follows:
Long delay < Short delay < Instantaneous
For applications requiring auto-reclosing, the setting value of ILC2 must be less than that of ILC1.
After all controller parameters have been set, press the Clear Lamp key once or perform a power-off reset to put the controller into operation mode.

○ Controller Test

After setting the controller parameters and before the circuit breaker is put into operation, users can check the controller's various protection functions as needed. The controller test offers a Trip/Non-Trip option:
When testing with the Trip key, the circuit breaker will trip.
When testing with the Non-Trip key, no trip signal will be sent, and the circuit breaker will not trip.
Note: For L-type products, only the Trip test is available. Press the Test key once, and the controller will send an instantaneous trip signal to trip the circuit breaker.
For testing convenience, earth fault protection will be treated as being in the trip position regardless of whether it is set to the trip or alarm position, and its priority level is higher than that of earth fault.

○ Other Operating Rules for the Controller

When the controller is in the setting or checking state, if no key is pressed within 1 minute, it will automatically clear the key input and enter normal operation mode. Meanwhile, if a fault occurs, it will automatically lock its functions and enter fault handling mode.

a. Setting Check

After the controller is cleared (by pressing the "Clear Lamp" key), and under fault-free conditions, press the "Setting" key continuously to cycle through and display various states along with their corresponding set current and time values. After completing the check, press the "Clear Lamp" key once (if no key is pressed within 1 minute, the controller will automatically enter normal operation mode).

b. Grid Operating Current and Voltage Check

After the controller is cleared (by pressing the "Clear Lamp" key), and under fault-free conditions:
Press the "Select 1" ("Select") key continuously to cycle through and display the operating current values of each phase and the earth fault current; the maximum phase current is displayed by default.
Press the "Select 2" key continuously to cycle through and display each line voltage; the maximum line voltage is displayed by default.
After the controller is cleared, press the "Fault Check" key once to display the previous fault state and fault current. After a test or fault trip, press the "Select 1" ("Select") key to cycle through and display the current or time values of the test or fault. Test states are not memorized.

c. Reset

Before closing the circuit breaker:
First, press the controller's "Clear Lamp" key to put it into normal operation mode.
Then press the mechanical "Reset" button to close the circuit breaker.
After the circuit breaker trips due to a fault, you must press the red mechanical reset button on the controller. If an immediate closing is required, you must first power off the controller, then reset it, before closing the circuit breaker.

○ If the user has specific requirements for the product's characteristic settings according to Tables 4, 5, and 6, these can be specified in the order, and the product will be calibrated at the factory according to the order requirements.

○ If no specific requirements are specified in the user's order, the M-type controller will be selected, with the following factory default settings:

a. Long-delay Ir1 is set to 1.0In, and the operating time at 1.5Ir1 is set to 15s.
b. Short-delay Ir2 is set to a value slightly greater than Ir1 (time limit: 0.4s). For In = 4000A and above, Ir2 = 5In
c. Instantaneous Ir3 is set to 12In. For In = 4000A and above, Ir3 = 8In
d. Earth fault Ir4 is set to 0.4In, and the operating time is set to 0.2s.

○ If the user needs to modify the factory default settings during use, this can be done via the controller according to Table 4 after fully understanding the product.

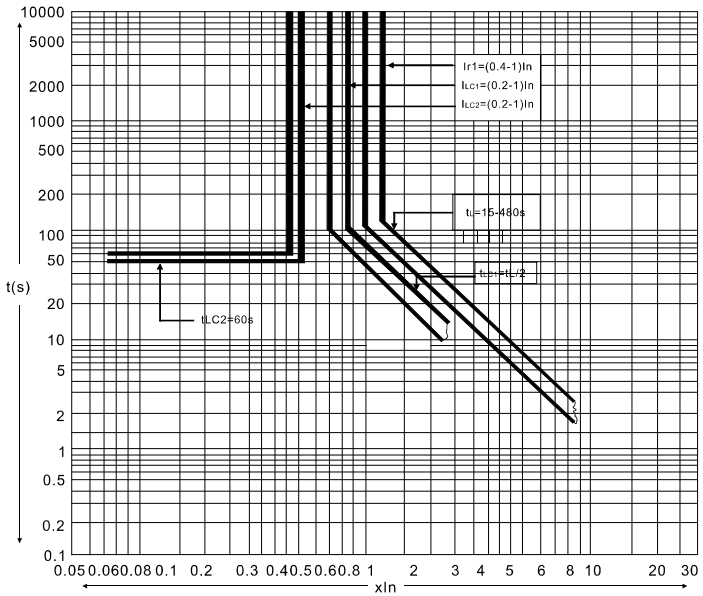

Figure 3: Definite Time Characteristic Curve

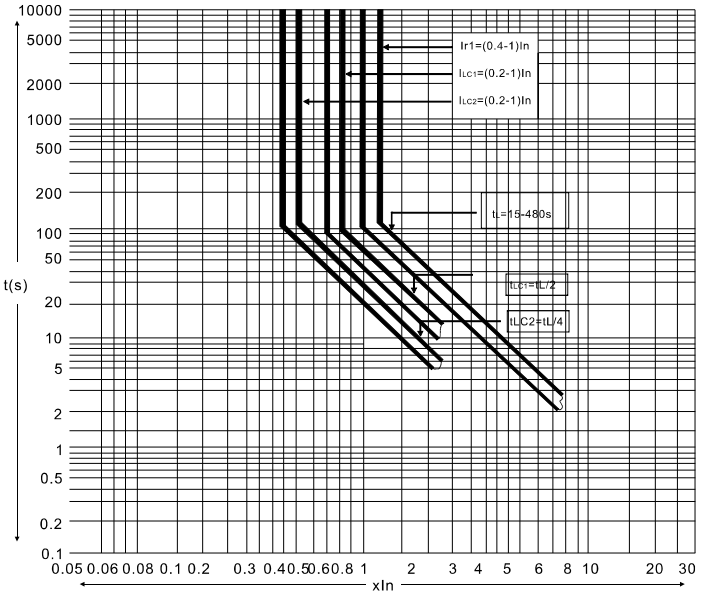

Figure 4: Inverse Time Characteristic Curve

Type H Intelligent Controller

1.-Reset Button
After the circuit breaker trips due to a fault or test, press this button before closing the circuit breaker again.
2.-Load Display
Displays the overload long-delay current.
3.-Setting Knob for Long Delay, Short Delay, Instantaneous, and Earth Fault Protection Current
Adjust the protection current values according to the scale on the knob.
4.-Fault Indicator Light
Indicates the fault type.
5.-Clear Lamp Key
Must be pressed after controller setting, testing, or a fault to put the controller into normal operation mode.
6.-"Setting" Key
Used to check or set various protection characteristic currents or times. Press this key to cycle through and display each state.
7.-Fault Check Key
Press this key after the circuit breaker trips due to a fault to indicate the cause of the trip . The fault memory function is retained even after power-off.
8.-Test Key
This key checks the proper coordination between the controller and the circuit breaker.
9.-"Save", "+", "-" Keys
Used to set current or time values.

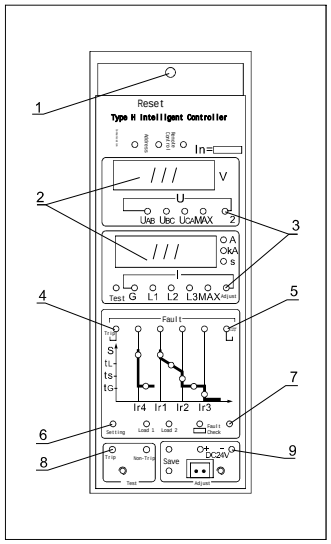

Type H Intelligent Controller

○ Short-delay Overcurrent

Short-delay overcurrent protection is of the definite-time type. If an inverse-time characteristic is required for low current multiples, the characteristic follows: I^2Ts 8Ir1 ^{2}ts ts

where ts is the general delay design time. When the overload current exceeds 8Ir1, it automatically switches to the definite-time characteristic, which is detailed in Table 6. The time limit error is ±15%.

Table 6

Delay Time (s)				Reset Time (s)			
0.1	0.2	0.3	0.4	0.06	0.14	0.23	0.35

○ The characteristics of overcurrent trip protection are shown in Figure 1, and the characteristics of earth fault protection are shown in Figure 2.

Functions of the Type M Intelligent Controller

a. Ammeter Function

Displays the operating current of each phase and the earth leakage current. By default, it shows the maximum phase current, and can also display the current or time values for setting, testing, and fault events.

b. Voltmeter Function

Displays each line voltage, with the maximum value shown by default.

c. Remote Monitoring and Self-Diagnosis Function

1.Local Fault Self-Diagnosis
When a fault occurs in the controller's internal computer, it will display an error "E" or trigger an alarm, and automatically restart the computer. If required by the user, the circuit breaker can also be tripped.
2.Temperature Monitoring
When the local ambient temperature reaches 80°C, the controller will trigger an alarm, and can trip the circuit breaker at a lower current (if required by the user).
3.Signal Output
The intelligent controller outputs signals (including overload, earth fault, short circuit, load monitoring, pre-alarm, and trip indication (OCR)) via contacts or optocouplers, facilitating external remote control.
Contact Rating: DC 28V, 3A; AC 125V, 3A.

d. Setting Function

The [Setting], [+], [-], and [Save] buttons are used to configure various parameters of the trip unit.
Press the [Setting] key to navigate to the desired configuration state (indicated by the status indicator lamp).
Use the [+] or [-] keys to adjust the parameter to the required value, then press [Save] once. A flash of the Save indicator lamp confirms that the setting value is locked.

e. Test Function

The [Setting], [+], [-], [Trip], [Non-Trip], and [Reset] keys are used to verify the controller's various protection characteristics.Use the [Setting], [+], and [-] keys to set a test current that simulates a fault (Note: Do not press [Save] to lock this value).Press the [Trip] or [Non-Trip] key to start the test, and the controller will enter fault handling mode:Pressing [Trip] will trip the circuit breaker.
Pressing [Non-Trip] will not trip the circuit breaker, but the trip unit's indicator states will remain normal.
After the test, press the [Reset] or [Clear Lamp] key before performing additional tests.

f. Load Monitoring Function

Two setting values are configured: ILc1 has a setting range of (0.2~1)In, ILc2 has a setting range of (0.2~1)In.
The delay characteristic of ILc1 is inverse time, with its time setting value being 1/2 of the long delay setting value. The delay characteristic of ILc2 offers two options: Inverse time characteristic: Its time setting value is 1/4 of the long delay setting value. Definite time characteristic: The delay time is fixed at 60s.Function of the Two Delay Modes: The first mode (inverse time for ILc2) is used to trip lower-level non-critical loads when the current approaches the overload setting value. The second mode (definite time for ILc2) is used when the current exceeds the ILc1 setting value: The controller trips lower-level non-critical loads after a delay, causing the current to drop. This ensures the main circuit and critical load circuits remain powered.
When the current drops to the ILc2 setting value, the controller sends a command after a delay to reconnect the tripped lower-level circuits, restoring power to the entire system.
The user can select one of the two monitoring protection modes described above. The monitoring characteristics are shown in Figure 3 and Figure 4.

Common Faults and Troubleshooting Methods

No.	Fault Symptom	Cause	Troubleshooting Method
1	Circuit breaker cannot close	⊙Undervoltage release has no power supply and is not connected. ⊙After the intelligent controller is activated, the red button on the upper part of the controller panel has not been reset. ⊙The operating mechanism is not charged. ⊙The drawout unit is not in the " Connected" or "Test" position. ⊙The "Open Position Key Lock" is in the locked state.	⊙Check the wiring and connect the power supply of the undervoltage release. ⊙Press the reset button. ⊙Charge the mechanism manually or electrically. ⊙Use the crank to move the circuit breaker unit to the " Connected" or "Test" position. ⊙Use the special key to unlock the key lock.
2	Circuit breaker cannot charge electrically	⊙The power supply of the electric operating mechanism is not connected. ⊙The power supply capacity is insufficient.	⊙Check the wiring and connect the power supply. ⊙Check that the operating voltage is greater than 85%Ue.
3	Closing solenoid cannot close the circuit breaker	⊙No power supply voltage. ⊙The power supply capacity is insufficient.	⊙Check the wiring and connect the power supply. ⊙Check that the operating voltage is greater than 85%Ue.
4	Shunt release cannot trip the circuit breaker	⊙No power supply voltage. ⊙The power supply capacity is insufficient.	⊙Check the wiring and connect the power supply. ⊙Check that the operating voltage is greater than 70%Ue.
5	Fault current exceeds the long delay, short delay, and instantaneous setting values, but only instantaneous action occurs, with no short delay or long delay action.	⊙The setting values for long delay, short delay, and instantaneous protection are set unreasonably, falling within the same current range.	⊙ Re-set the values according to the principle of Ir1 < Ir2 < Ir3, considering their respective operating ranges.
6	Circuit breaker trips frequently	⊙ Overload protection trips due to on-site overloaded operation. The overload thermal memory function is not cleared by power-off before re-closing.	⊙Power off the controller once, or re-close the circuit breaker after 30 minutes.
7	The crank of the drawout-type circuit breaker cannot be inserted into the circuit breaker	⊙The drawout-type guide rail or circuit breaker unit is not fully pushed in.	⊙Push the guide rail or circuit breaker unit fully into place.
8	The drawout-type circuit breaker unit cannot be pulled out when in the open position	⊙The crank is not removed. ⊙The circuit breaker is not fully in the "Separated" position.	⊙ Remove the crank. ⊙ Fully crank the circuit breaker to the "Separated" position.

Classification

◯ By Installation Type

a. Fixed Type

b. Drawout Type

◯ By Pole Number: 3-pole, 4-pole

◯ By Operation Method

a. Electric Operation

b. Manual Operation (for maintenance and servicing)

◯ Types of Release

Intelligent Release, Undervoltage Instantaneous (or Time-Delay) Release, Shunt Release

◯ Performance of Intelligent Controller

a. The intelligent controllers are categorized as:
Type H (Communication Type), Type M (Standard Intelligent Type), Type L (Economic Type), Type 2M (High Anti-Interference Type), Type 2H (High Anti-Interference Communication Type)

b. It provides overload long-delay, short-delay, definite-time, and instantaneous functions. Users can configure these to form the required protection characteristics.

c. Single-phase earth fault protection function.

d. Display Function: Shows setting current, operating current, and each line voltage (voltage display must be specified in the order).

e. Alarm Function: Overload alarm.

f. Self-Test Function: Overheat protection self-test, microcomputer self-diagnosis.

g. Test Function: Tests the operating characteristics of the release.

Normal Operating Conditions and Installation Conditions

◯ Ambient Air Temperature
The upper limit shall not exceed +40°C, the lower limit shall not be lower than -5°C, and the 24-hour average value shall not exceed +35°C.
Note: For operating conditions with a lower limit of -10°C or -25°C, the user shall declare to our company. For operating conditions where the upper limit exceeds +40°C or the lower limit is lower than -25°C, the user shall consult with our company.

◯ The altitude of the installation site shall not exceed 2000m.

◯ Atmospheric Conditions
The relative atmospheric humidity shall not exceed 50% when the ambient air temperature is +40°C. Higher relative humidity is allowed at lower temperatures.
The monthly average maximum relative humidity in the wettest month is 90%, while the monthly average minimum temperature in that month is +25°C, considering condensation on the product surface due to temperature changes.

◯ Protection Class: IP40

◯ Pollution Degree: 3

◯ Application Category: Category B or A

◯ Installation Category
The installation category of the main circuit of the circuit breaker, undervoltage release, and primary coil of the power transformer is IV.The installation category of the auxiliary circuit and control circuit is II.

◯ Installation Conditions

The circuit breaker shall be installed in accordance with the requirements of this manual. The vertical inclination of the circuit breaker shall not exceed 5° (the inclination of mining circuit breakers shall not exceed 15°).

Technical Data and Performance

◯ The rated current of the circuit breaker is shown in Table 1

Table 1

Frame Rated Current Irm(A)	Rated Current In(A)
2000	400、630、800、1000、1250、1600、2000
3200	2000、2500、2900、3200
4000	3200、3600、4000
6300	4000、5000、6300