产品合格证

符合标准: GB/T 13639

检 验 员: 检 01

出厂日期: 见产品或盒贴出厂编号

本产品经检验合格, 准予出厂。

C-Lin 欣灵电气股份有限公司 XINLING ELECTRIC CO.,LTD

产品合格证

C-Lin
欣灵电气股份有限公司
XINLING ELECTRICAL CO.,LTD.
地址: 浙江省乐清经济开发区纬十九路328号
电话: 0577-6273 5555 传真: 0577-6272 2963
官网 : www.c-lin.cn E-mail: xl@xinling.com
技术咨询: 400-8236-775

RECYCLABLE

国家高新技术企业 浙江省知名商号

C-Lin 欣灵

使用说明书
Products Instructions

XMT□-5000/HB Series

Intelligent Temperature Controller

Thank you very much for using Xinling brand time relay. Please read the instruction manual before using the product!

09A003O1

Precautions for use

Please pay attention to the following when using this product:

· People who use this product must have sufficient knowledge of electrical systems.
· Before using this product, you should read and understand this manual to ensure correct use.
· Keep this manual properly to ensure that you can refer to it at any time when needed.

Understand the following warnings to avoid operating errors and cause the opposite effect of product characteristics and functions.

1. Make correct connections according to the polarity of the terminals. A maximum of two wires or terminals of the same model size can be inserted into one terminal.
2. Use this product under rated load and power supply.
3. When performing self-tuning, the load and control unit should be powered on at the same time or the load should be powered on before the controller is powered on.
4. There should be a switch or circuit breaker near this product. The switch or circuit breaker should be within easy reach of the operator and have a clear disconnect mark.
5. The company is not responsible for complying with any standards, regulations or rules for user products integrated with this product.

I. Brief introduction

1. XMT □ -5000 / HB series intelligent temperature controller (hereinafterreferred to as instrument) takes new microtreatment as the core, adopts a large number of surface mounting technology, advanced machine technology, and reliable performance. Its excellent control accuracy, rapid disturbance response and powerful anti-interference ability, can meet a variety of user temperature control needs. Can be widely used in machinery, chemical industry, ceramics, light industry, metallurgy and petrochemical, heat treatment and other industries of temperature, flow, pressure, liquid level and other automatic control.

2. Main features:
The software is zero and the cold end is automatically compensated; adopt industrial and expert self-set PID and adaptive technology; four-digit two-color LED digital window displays measurement value and set value respectively.
Instrument meets the standard: GB / T13639.

II. Main technical parameters

1. Compatible input: thermocouple (E, J, K, S, B); thermal resistance (Cu 50, Pt 100).
2. Display error: less than or equal to 1.0% ± 1 word of full range.
3. Cold end compensation error: 2℃.
4. Respectively rate: 1℃ or 0.1℃.
5. Sampling period: 300 ms.
6. Alarm mode: two alarms (XMTG-5000 / HB 101 can only do one alarm mode), and the alarm mode is set arbitrarily.
7. Alarm output: relay contact AC250V3A (resistive load).
8. Main control mode: PID control or bit control (ON / OFF).

9. Main control output: relay contact output (capacity: AC220V resistive load 3A); SSR zone dynamic level (DC12V); load capacity ≤30mA.
10. Working power supply:
[XMT5000 series]: AC220V±10%50Hz/60Hz; power consumption ≤2VA;
[HB series]: AC/DC 100V~240V 50Hz/60Hz; power consumption ≤2VA

III. Model Explanation

XMT □-□ □ □ □

- Input signal type: 1: thermocouple 2: thermoelectric resistance
- Alarm output: 0: no alarm function
  1: One alarm (AL1) (factory default ceiling deviation alarm)
  3: Two alarm output (factory default is upper limit deviation alarm AL1, lower limit deviation alarm AL2)
- Main control output (OUT1): 0:2-bit relay output (switching difference is adjustable).
  1: PID adjustment, DC1~5V voltage signal continuous output.
  2: PID adjustment, relay contact intermittent output.
  3: PID adjustment, continuous output of DC0~5V signal.
  4: PID adjustment, DC 4 ~ 20 mA signal continuous output.
  5: PID adjustment, drive the solid-state relay SSR intermittent output.
  7: PID adjustment, bidirectional controlled silicon over zero trigger signal output.
  9: PID ad ustment DC 0 ~ 10 mA continuous si nal output.
- Product family code: 5: Size of 5000 series
- Instrument panel (see Table 1, page 5)

For example: XMTA-5231 K 0~400℃, its specific function meaning is: instrument size is 96*96mm control relay contact output, with K-type thermocouple, range 0~400℃, intelligent instrument with two kinds of output of the road alarm relay, in which the first road alarm AL1 (factory default is the upper limit deviation alarm) second road alarm AL2 (factory default is the lower limit deviation alarm).

HB101
HB401 □ □—□ * □ □— Additional function
HB701
HB901 ① ② ③ ④ ⑤

①Control method:
D: Automatic calculation of positive action (cooling) F: Automatic calculation of reverse action (heating) W: ON/OFF position control

②Type type (see Table 4, page 18)

③Main control output mode:
A: Current output (4 mA ~ 20 mA) continuous output M: Relay output V: Solid-state output (SSR)

④First route alarm type (AL1):
D: Area alarm C: Outarea alarm B: Lower limit deviation alarm N: no alarm
A: Upper limit deviation alarm J: Lower Absolute Alarm H: Upper Absolute Alarm

⑤Second route alarm type (AL2):
D: In-zone alarm C: Outarea alarm B: Lower limit deviation alarm A: Upper limit deviation alarm
N: no alarm J: Lower limit absolute value alarm H: Upper limit absolute value alarm

Table 1 Model dimension table Unit: mm

Model	Length, width and height	Opening size (width and height)
HB101	48×48×78	45×45
HB401	48×96×78	45×92
HB701	72×72×78	68×68
HB901	96×96×78	92×92

Continuation table 1

Model	Length, width and height	Opening size (width and height)
XMTG-5000	48mm×48mm×107mm	45mm×45mm
XMTE-5000	48mm×96mm×91mm	45mm×92mm
XMTF-5000	96mm×48mm×90mm	92mm×44mm
XMTD-5000	72mm×72mm×91mm	68mm×68mm
XMT-5000	160mm×80mm×94mm	152mm×76mm
XMTA-5000	96mm×96mm×91mm	92mm×92mm

IV. Install

1. The instrument is installed in the following environment:
(1) Atmospheric pressure: 86 kPa ~ 106 kPa.
(2) Ambient temperature: 0~50℃.
(3) Relative humidity: 45 ~ 85% RH.
2. The following attention should be paid during installation:
(1) Possible condensation caused by rapid changes in ambient temperature.
(2) Corrosive, flammable gas.
(3) Direct vibration or impact on the main structure.
(4) Pollution from water, oil, chemicals, smoke or vapor.
(5) excessive dust, salt or metal powder.
(6) Direct air blowing, direct sunlight.
3. Installation process:
(1) Make the rectangular square hole on the disk according to the size of the instrument.
(2) When multiple instruments are installed, the distance between the left and right holes should be greater than 25mm; the distance between the upper and lower holes should be greater than 30mm.
(3) After the instrument is embedded in the opening hole of the disk surface, insert the instrument installation groove into the installation bracket.
(4) tightly push the installation bracket, so that the instrument and the disk are firmly combined, and then tighten the screw with a screwdriver, but to prevent the twisting is too tight.

V. Panel site and name (take XMTE-5000 for example)

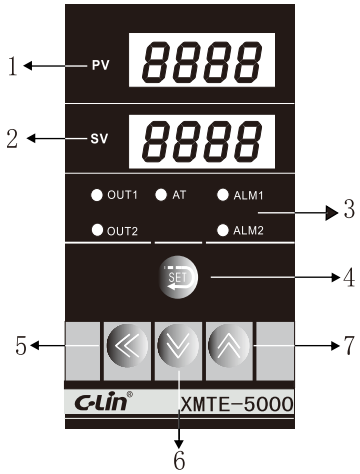

1. Measurement value (PV) (red)
① Display measurement value (PV)
② Display parameter name
③ Abnormal representation of the measurement loop

2. Set value (SV) (green)
① Displays the set value
② Displays the parameter content
③ The control circuit is abnormal

3. Indicator lamp
① Self-setting indicator light: (AT) (green) self-setting work when the light is on
② Control output indication: (OUT 1) (green) The light is on
③ Alarm indicator: (ALM 1) (red) the light is on when the first alarm
④ Alarm indicator: (ALM 2) (red) when the second alarm

4. Function key (SET)
① SV setting: press the SET key, SV bit flicker, you can use the other three keys to modify the number.
② Press and hold down the SET key for 3 seconds to enter the first layer of control parameter mode.

5. The shift key
① In the parameter set state, make the shift key.

6. The subtraction key
In the parameter setting state, make the subtraction key.

7. Addition key
In the parameter set state, make the addition key.

VI. Function configuration of wiring terminals

1. XMTG-5000 series terminal configuration (the actual wiring shall refer to the wiring diagram attached to the instrument housing).

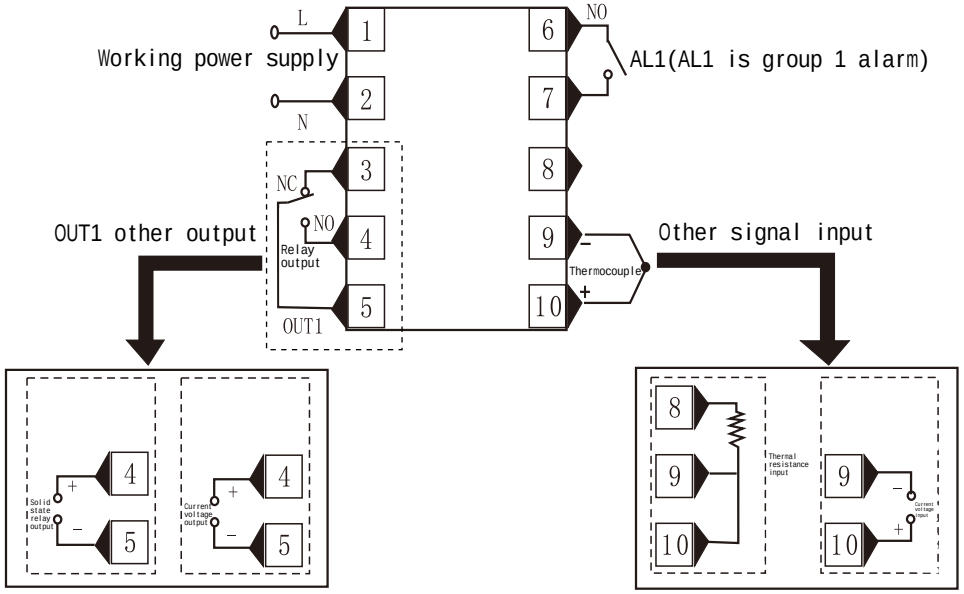

2. XMTA/XMTE-5000 series terminal configuration (for actual wiring, please refer to the wiring diagram attached to the instrument housing).

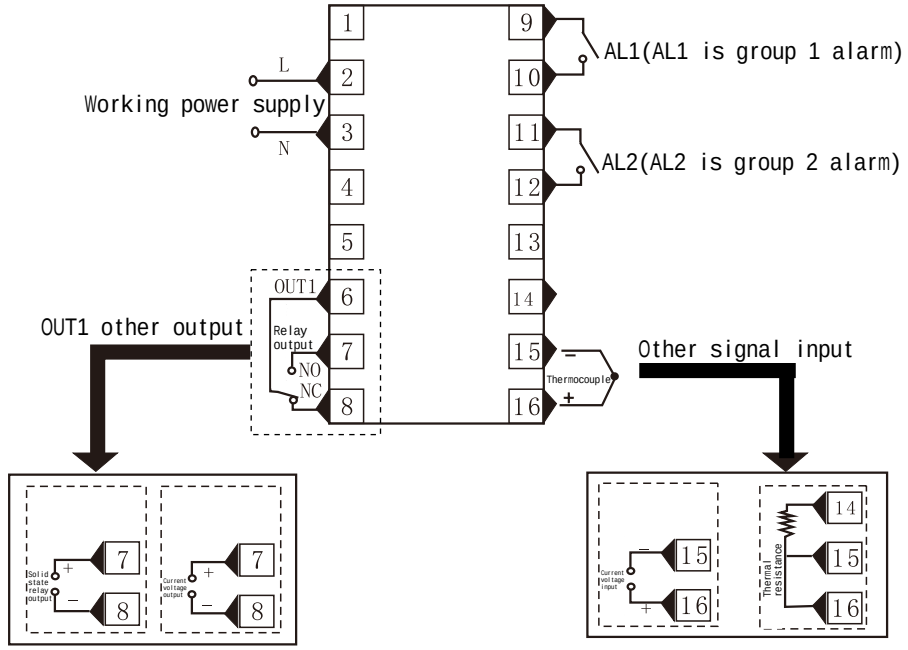

3. XMTF-5000 series terminal configuration (for actual wiring, please refer to the wiring diagram attached to the instrument housing).

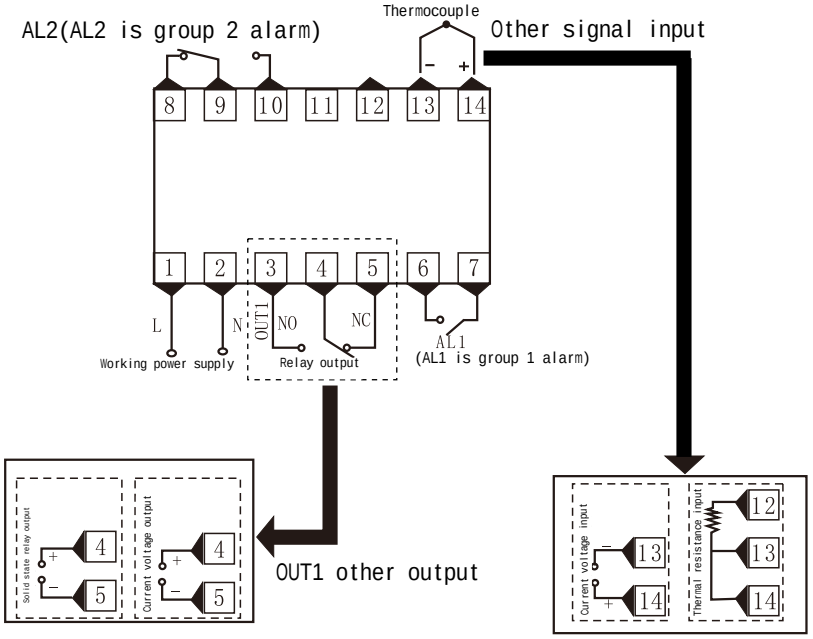

4. XMTD-5000 series terminal configuration (for actual wiring, please refer to the wiring diagram attached to the instrument housing).

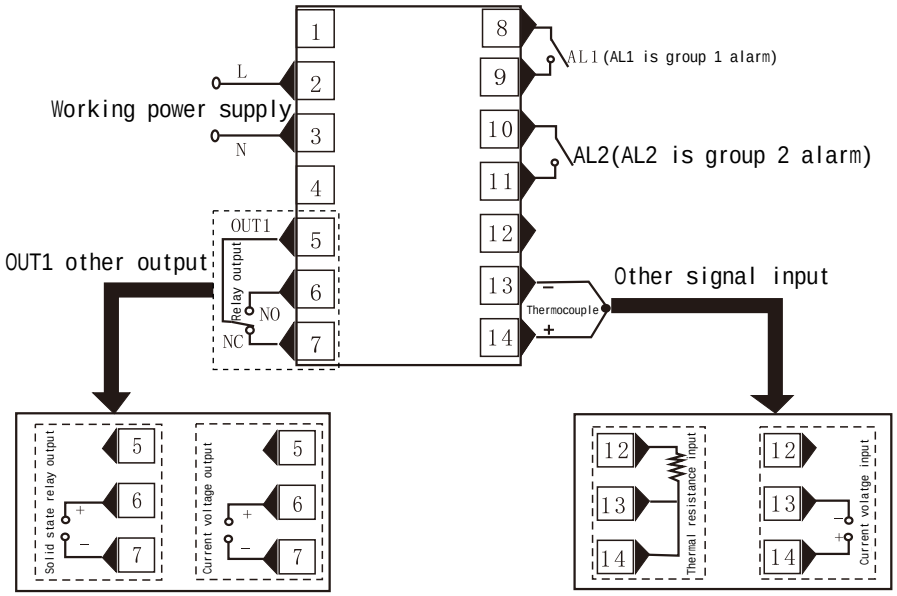

5. XMT-5000 series terminal configuration (for actual wiring, please refer to the wiring diagram attached to the instrument housing).

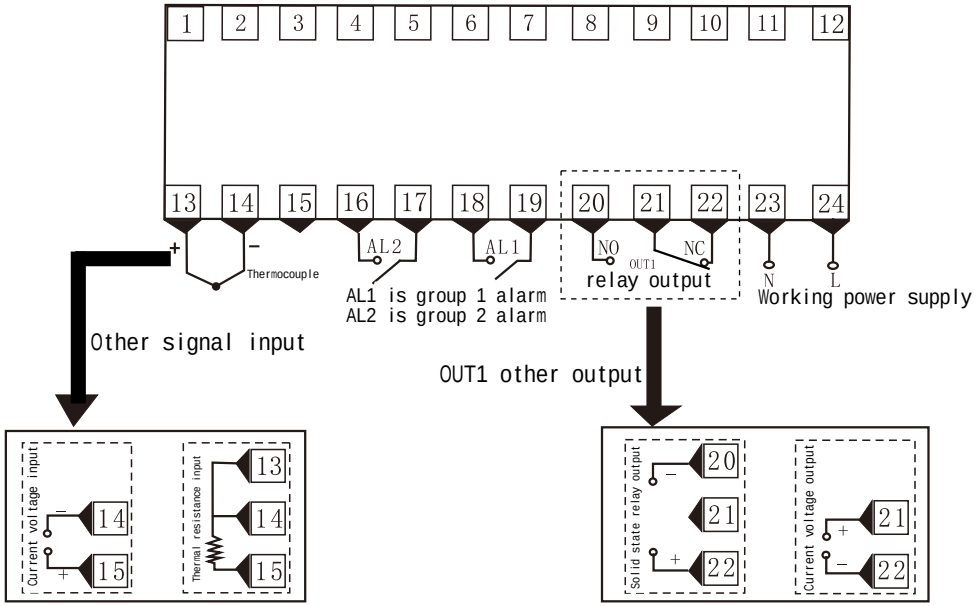

6. HB101 series terminal configuration (for actual wiring, please refer to the diagram attached to the instrument housing).

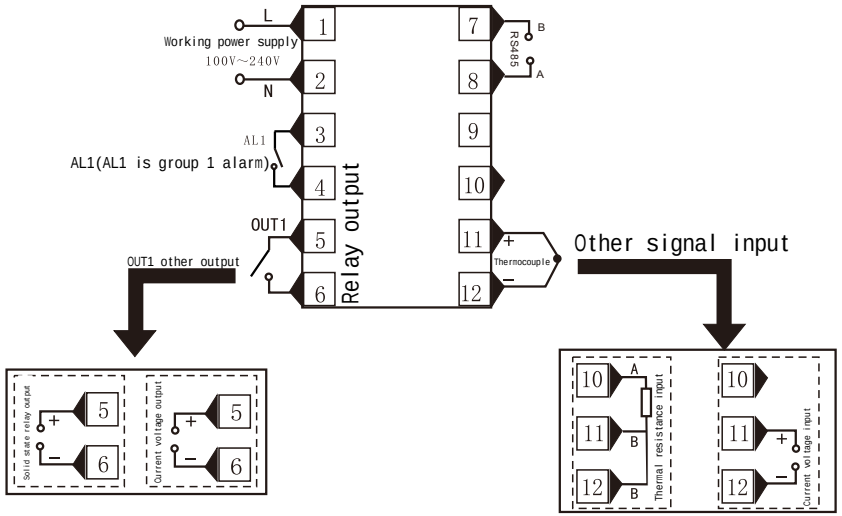

7. HB401/901 series terminal configuration (for actual wiring, please refer to the diagram attached to the instrument housing).

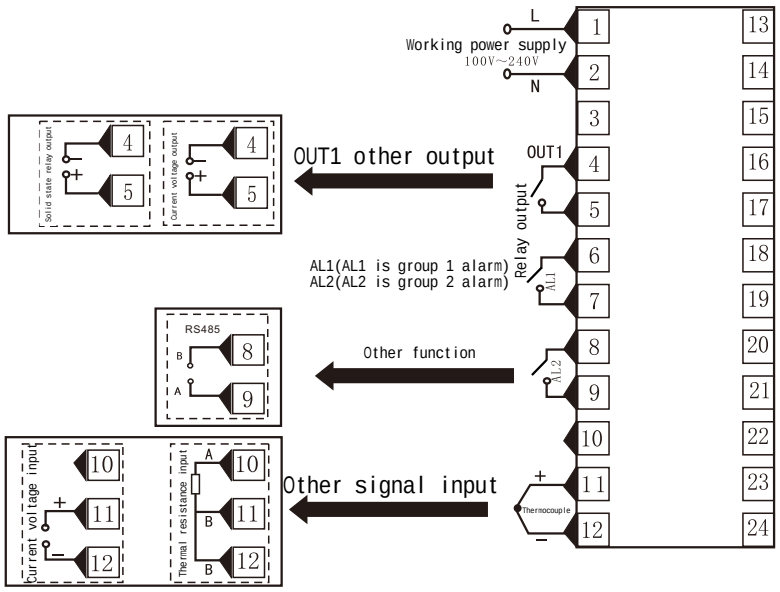

8. HB701 series terminal configuration (for actual wiring, please refer to the diagram attached to the instrument housing).

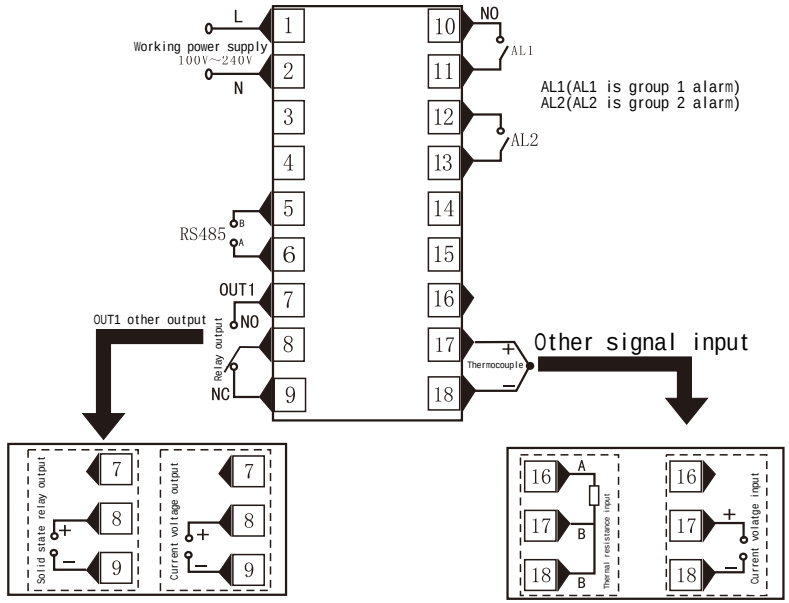

VII. Instrument operation process

1. Call out order for each mode

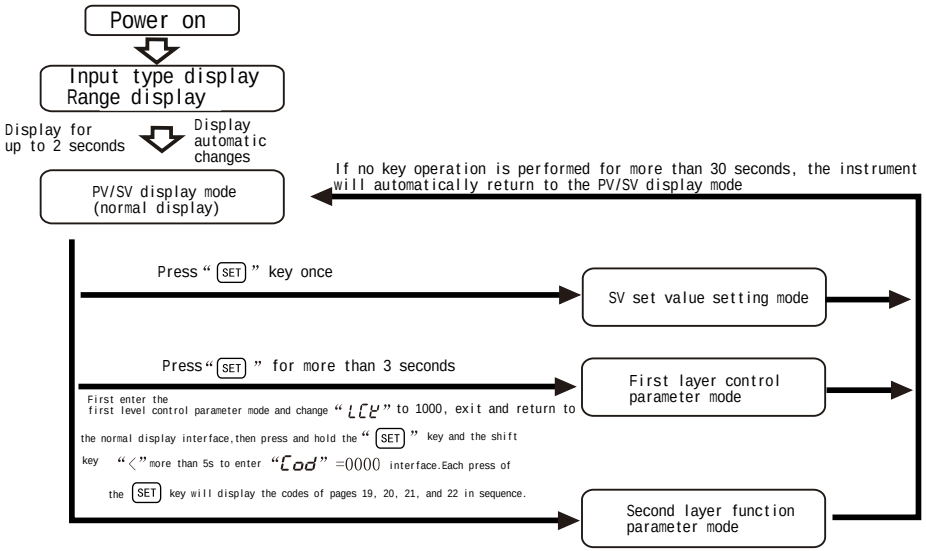

After the instrument is powered on, it will immediately display the input type and range. For example: The input type in the figure below is K-type thermocouple and its range is 0~1300℃.

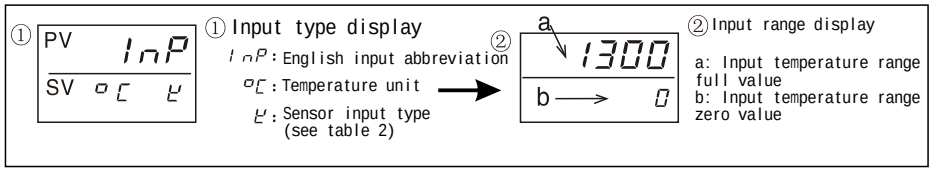

Display	K	J	S	b	E	Pt	Cu50	mA
Input type	Thermolcouple TC					Thermal resistance RTD		
	K	J	S	B	E	Pt100	Cu50	mA

2. First layer control parameter description

Table 3 First-layer control parameter description
(Depending on the different function control methods of the instrument, some of the above parameters will not work)

Sign	Name	Description	Setting range	Factory value
AL1 / AL1	Group 1 alarm setting	According to different alarm modes (see page 23) Factory alarm type SL4=000	Full range	10
AL2 / AL2	Group 2 alarm setting	According to different alarm modes (see page 23) Factory alarm type SL5=0001	Full range	20
ATU / ATU	Auto-tuning	The instrument automatically calculates PID control parameters	0001: Auto-tuning on 0000: Auto-tuning off	0000

Continuous table 3

Sign	Name	Description	Setting range	Factory value
P / P	Proportional band	Set the temperature control proportional band size. The "p" value is generally set to "0030". For heaters with fast heating rates, the P value is increased. If the "p" value is set to "0000", it is a position control.	0-full range, when set to 0000 ON/OFF control	30
I / I	Integral time (seconds)	Integral time constant, when the temperature fluctuates regularly, the I value should be increased; when the temperature cannot eliminate the static error for a long time, the I value should be reduced. The I value between 60s-240s is suitable for more temperature control systems.	0~3600 (seconds)	240
d / d	Derivative time (seconds)	Differential time constant, increasing the D value helps to reduce the overheating of the system, but too large a D value will reduce the anti-interference ability of the system. The D value is generally 1/4 of the I value.	0~3600 (seconds)	60
Ar / Ar	Limit integral Effective range	Limiting the effective range of integral	After the instrument is self-tuned Automatically set	5
T / T	Duty cycle (seconds)	1. Relay output T=20s. 2. Solid-state relay T=2s; thyristor output T=1s.	0~100 (seconds)	20
SC / SC	Sensor error correction value	Used to correct the measurement error caused by thermocouples and compensation wires.	-100～100	0
LCK / LCK	Data lock	(1) When LCK=1000, all data can be modified. (2) When LCK=0001, except for "SV", "AL1" and "AL2", all other parameters can be modified. (3) When LCK=0011, except for "SV", all other parameters can be modified. (4) When LCK=0111, all data cannot be modified.	0000～1111	0000
OH / OH	Hysteresis	Hysteresis value (OH hysteresis control is available only in two-position control)	0000～1000	0000

①After the meter is powered on and displays normally, press and hold the "SET" button for 3 seconds to enter the first-level control parameter menu. (See Table 3)
②The first-level menu data lock (LCK) can only be entered when "1000" is set. (See pages 19 and 20 for details)

Table 4 Instrument input type settings

Input type	Power on sign	SL1 setting	Input type	Power on sign	SL1 setting
K -50~1350℃	°C K	0--K	1～5V	1-5U	1-5V
J -50~1200℃	°C J	1--J	0～20mA	0-20	0-20mA
r -50~1650℃	°C r	2--r	4～20mA	4-20	4-20mA
S -50~1650℃	°C S	3--S	NTC	nrc	NTC
b 0~1800℃	°C b	4--b			
E -50~850℃	°C E	5--E			
n -50~1300℃	°C n	6--n			
T -250~400℃	°C T	7--T			
Pt100 -200~850℃	°CPt	8-Pt			
Cu50 -50~150℃	°CCU	9-Cu			
Resistance	rES	10rs			
mV	mU	11MV			
0～5V	0-5U	0-5V			

3. Second layer function parameter menu: (Instrument data lock (LCK), only when set to "1000" can you enter the second level function parameter.

For example: sensor input type, main control output type (heating or cooling), alarm mode (6 types), temperature range setting, etc. In thePV/SV normal display mode, press and hold the "SET" key and the "<" key at the same time (Figure 2, page 19) to enter the function parameter setting mode, and refer to "3. (Pages 19, 20) Parameter Setting Operation" to make changes. After entering this mode, each press of the "SET" key will display the following code symbols in sequence.

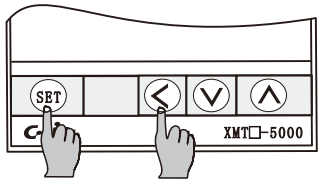

Press "(SET)" and "(<)" at the same time

Process one:

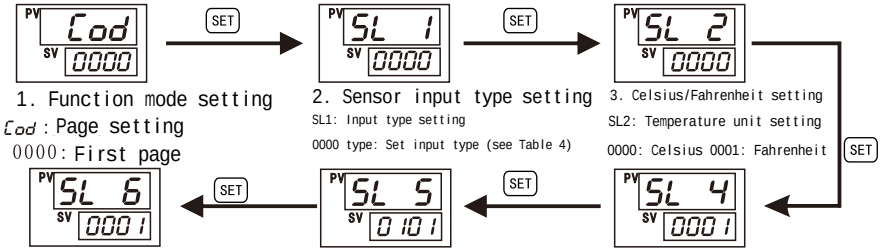

1. Function mode setting
Cod: Page setting
0000: First page

2. Sensor input type setting
SL1: Input type setting
0000 type: Set input type (see Table 4)

3. Celsius/Fahrenheit setting
SL2: Temperature unit setting
0000: Celsius 0001: Fahrenheit

4. Alarm 1 (AL1) mode setting
SL4: Alarm 1 mode setting
0001: Set alarm 1 mode (see Table 5)

5. Alarm 2 (AL2) mode setting
SL5: Alarm 2 mode setting
0101: Set alarm 2 mode (see Table 5)

6. Master control mode setting (OUT1)
SL6: Master control mode setting
0001: Set the master control mode (see Table 6)

Process two

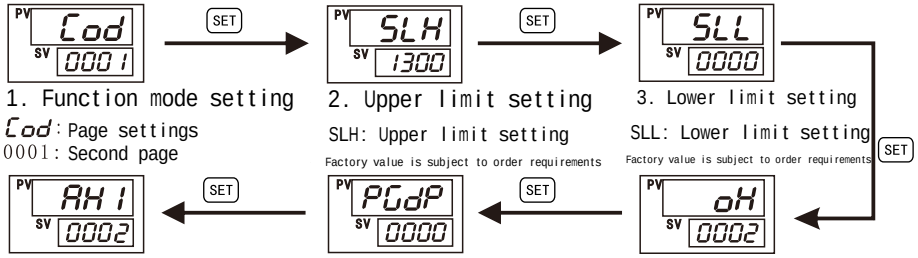

1. Function mode setting
Cod: Page settings
0001: Second page

2. Upper limit setting
SLH: Upper limit setting
Factory value is subject to order requirements

3. Lower limit setting
SLL: Lower limit setting
Factory value is subject to order requirements

4. Master control switching differential (OUT1)
OH: Setting range is 0~100 or 0.0~100.0.
Factory value is 0002 or 002.0
Valid when P=0

5. Set the number of decimal places
PGDP: Setting range 0000~0003 (Note 1)
Factory value according to ordering requirements

6. Alarm 1 (AL1) differential
AH1: Setting range: 0~100 or 0.0~100.0
Factory value 0002 or 002.0

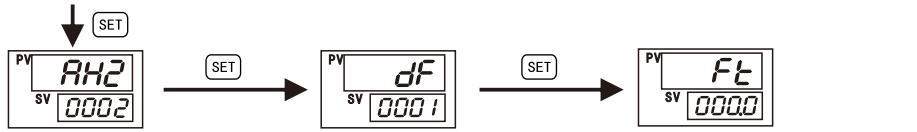

11. Alarm 2 (AL2) hysteresis
AH2: Setting range: 0~100 or 0.0~100.0
Factory value 0002 or 002.0

12. Digital filter constant
DF: Setting range: 0~10
Factory value 0001

13. Temperature tracking value
FT: Setting range: 0~5.0
Factory value 000.0

Note 1: Decimal point setting parameter description:

0000 display: 0000	0001 display: 00.0	1. Standard signal can set decimal point freely
0002 display: 00.00	0003 display: 0.000	2. Thermocouple signal cannot have decimal point

Process 3: This process function requires the instrument to install the corresponding hardware module support

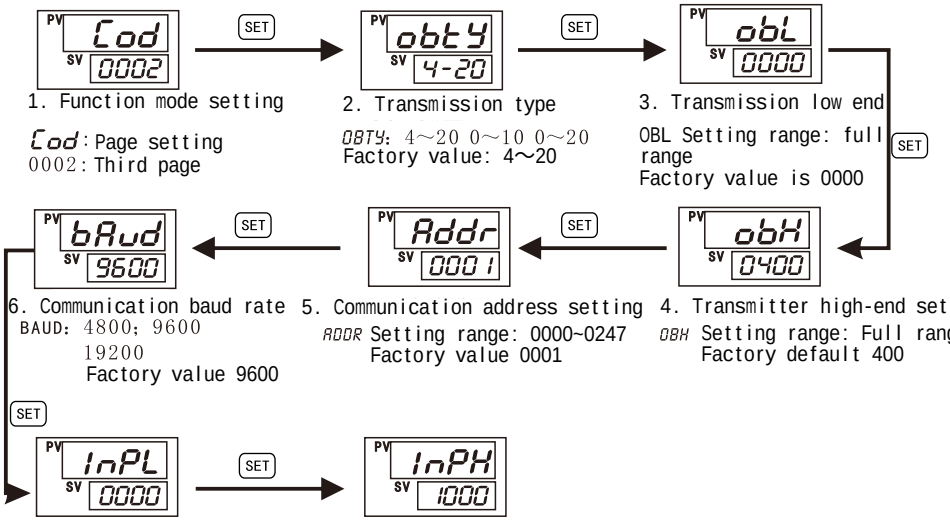

1. Function mode setting
Cod: Page setting
0002: Third page

2. Transmission type
OBTY: 4~20 0~10 0~20
Factory value: 4~20

3. Transmission low end
OBL Setting range: full range
Factory value is 0000

4. Transmitter high-end setting
OBH Setting range: Full range
Factory default 400

5. Communication address setting
ADDR Setting range: 0000~0247
Factory value 0001

6. Communication baud rate
BAUD: 4800; 9600
19200
Factory value 9600

7. Standard signal lower limit
INPL Setting range: Full range
Factory value 0000

8. Standard signal upper limit
INPH Setting range: Full range
Factory value 1000

Process four: Analog output function related

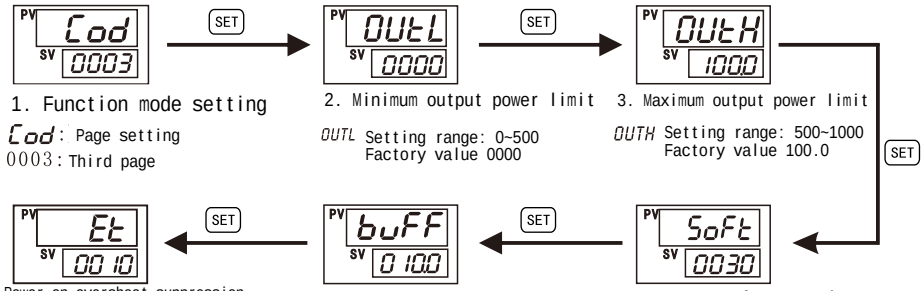

1. Function mode setting
Cod: Page setting
0003: Third page

2. Minimum output power limit
OUTL Setting range: 0~500
Factory value 0000

3. Maximum output power limit
OUTH Setting range: 500~1000
Factory value 100.0

4. Power-on soft start time
SOFT Setting range: 0~500s
Factory default 30s

5. Output power fluctuation suppression
BUFF Setting range: 000.0~100.0
Factory value 010.0

6. Power-on overshoot suppression
ET Setting range: 10~100
Factory value 10

The larger the Et value, the faster the temperature rises when the machine is turned on.
The smaller the Et value, the slower the temperature rises when the machine is turned on.

Press the "V" key on the measurement interface and P*** will appear; if P050, it means the current power output is 50%.

Table 5 Alarm mode ALM1/ALM2 ▲:Setting value SV △: Alarm point

Alarm type (ALM1/ALM2)	SL4/SL5 setting	Alarm description (taking AL1 as an example, AL2 is the same)
The first/second alarm function is not set	0000	No first alarm
Upper limit deviation alarm	0001	LOW (Low temperature) — AL1 — ON Alarm working — Setting value SV — SV+AL1 — HIGH (High temperature)
Lower limit deviation alarm	0101	LOW (Low temperature) — ON Alarm working — AL1 — SV−AL1 — Setting value SV — HIGH (High temperature)
Out-of-area alarm	0010	LOW (Low temperature) — ON Alarm working — AL1 — AL1 — ON Alarm working — Setting value SV — SV−AL1 — SV+AL1 — HIGH (High temperature)
In-area alarm	0110	LOW (Low temperature) — ON Alarm working — AL1 — AL1 — ON Alarm working — Setting value SV — SV−AL1 — SV+AL1 — HIGH (High temperature)
Upper limit absolute value alarm	0011	LOW (Low temperature) — ON Alarm working — AL1 value — HIGH (High temperature)
Lower limit absolute value alarm	0111	LOW (Low temperature) — ON Alarm working — AL1 value — HIGH (High temperature)

Table 6 Master control (OUT1) output type setting

Output type	SL6 setting	Description
Positive action intermittent output	0000	Used in cooling mode
Reverse action intermittent output	0001	Used in heating mode
Positive action continuous output (4~20mA)	0100	Used in cooling mode (requires relevant module support)
Reverse action continuous output (4~20mA)	0101	Used in heating mode (requires relevant module support)

4. Parameter setting operation
(1) After modifying the parameter value during operation, press the "SET" key once to save the change.
(2) In the control parameter setting menu, press and hold the "SET" key for 3 seconds to return to the PV/SV display mode.
(3) In the function parameter setting menu, press and hold the "SET" key for 3 seconds to return to the PV/SV display mode.
(4) During operation, if no key is pressed for more than 30 seconds, the current mode will automatically return to the PV/SV display mode and the modified data will not be saved.

5. Change the set value (SV)
For example: Set the set value (SV) to 300℃

Figure 3

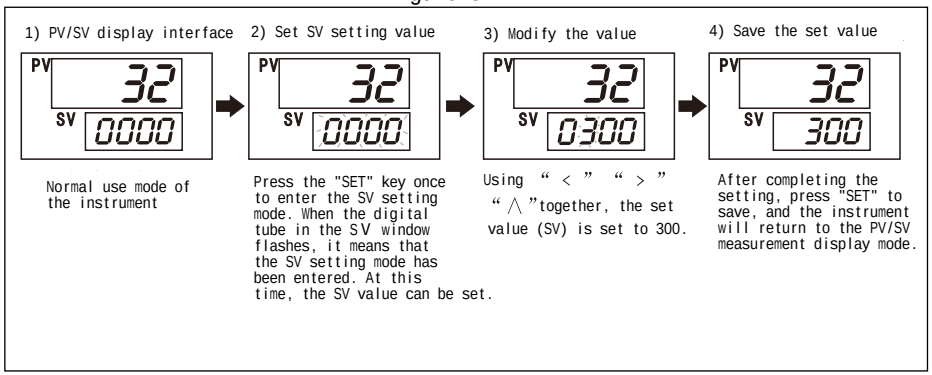

6. Change control parameters
In normal PV/SV display mode, press and hold the "SET" key for 3 seconds to enter the control parameter setting mode. The operation is the same as "2) and 3)" in the steps of "Change main control value (SV)" in Figure 3. After setting, press the "SET" key to save and enter the next parameter symbol. When the parameter setting is completed, press and hold the "SET" key for 3 seconds to return to the PV/SV display mode. (If you do not press the key for more than 30 seconds, the instrument will automatically return to the PV/SV display mode)

7. Change function parameters
In normal PV/SV display mode, and when the data lock function LCK=1000, press and hold the "SET" key and the "<<" key for 4 seconds to enter the function parameter setting mode. The operation is the same as "2) and 3)" in the steps of "Change the main control value (SV)" in Figure 3. After the setting is completed, press the "SET" key to save the setting and enter the next parameter symbol. All settings After the parameter setting is completed, press and hold the "SET" key and the "<<" key for 4 seconds, and the instrument will return to the PV/SV display mode.

VIII. Explanation of parameters and functions

1. Standard signal input
The selected input signal is a DC current signal of 4~20mA. When it is 0~20mA, a 250Ω or 500Ω standard resistor needs to be connected in parallel to the signal input end to convert it into a standard voltage signal.

2. Self-tuning function (ATU)
The ATU function is used to automatically measure, calculate and set the optimal PID constants.
1) Start the ATU automatic adjustment function (self-tuning): In the normal PV/SV display mode, press and hold the "SET" key for 3 seconds. The instrument enters the first-level control parameter setting mode, switches cyclically through the "SET" key, finds the function symbol "ATU" and sets its value to 0001, then presses the "SET" key to confirm; and returns to the PV/SV display mode. At this time, the self-tuning function is started. You can also press and hold the shift key in the measurement state to directly start the self-tuning, and the AT indicator light on the instrument panel will light up.
2) After the self-tuning function is started:
The (AT) indicator light on the instrument panel will light up, and the instrument will calculate the most suitable P, I, and D parameters according to the situation of the entire heating system. The length of the tuning time is related to the working condition of the system. The operator should wait patiently. After the instrument enters the self-tuning working state, the output is switched on and off. After the temperature value on the controlled object oscillates twice, the (AT) light goes out, and the instrument calculates the ideal PID parameter value. And it is automatically saved. The instrument starts to operate normally according to the self-tuning result, and the self-tuning setting parameter (ATU) automatically restores to "0000".

If you need to use self-tuning next time, you must set the "ATU" parameter value to "0001" again to restart self-tuning. During the whole process, if you need to exit self-tuning midway, find "ATU" in the control mode and set it to "0000", press the "SET" key to confirm, and the (AT) light goes out, that is, exit self-tuning. After the self-tuning is completed, the PID parameters are automatically set. Even if the power is cut off, the set PID parameters will still be saved, so there is no need to perform self-tuning when continuing to run.

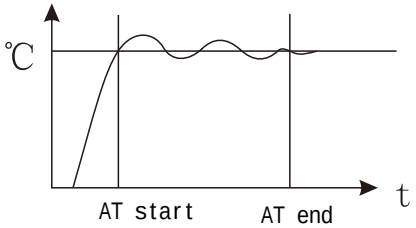

3. Change the instrument sensor input type and temperature range
When the input type is changed, the corresponding instrument range also needs to be changed. For specific steps, please refer to the following example.
For example: When the user changes the K-type (0~400℃) instrument to the Pt100 type (-50.0℃~400.0℃), the following steps are required:
(1) The first step is to change the input type;
Enter the second-level function parameter setting mode, when COD=0000, select the first page and change the SL1 value to
"8-Pt", press the "SET" key to confirm and change the input type to Pt100.

(2) The second step is to modify the range:
Enter the second-level function parameter setting mode, select the second page, when COD=0001, change the decimal point "PGdP" value to 0001 (one decimal point), then set the "SLH" value to "400.0" (upper limit of the range), and finally change the "SLL" value to "-50.0" (lower limit of the range), press the "SET" key to confirm that the change has been completed, and press and hold the SET key to return to the normal display mode.

4. Set the hysteresis value of the position control (ON/OFF) instrument
In position control, there must be a suitable hysteresis value. Too small hysteresis causes the AC contactor to operate frequently and reduce its life. Too large hysteresis value will cause the controlled value to fluctuate greatly. When the "P" value is set to "0000" in the first-level control mode parameters, the symbol "OH" will appear in the menu to indicate the hysteresis. The size of the hysteresis "OH" can be freely set according to user requirements. If the customer requires that the control object be powered on and work when the temperature is lower than the lower limit (such as 80℃), and be powered off and stop working when the temperature is higher than the upper limit (such as 100℃), this function can be realized by using the main control relay contact (OUT1) of the position meter. In this example, set SV to 100℃ and OH to 20℃=100-80. Other different temperature requirements can also be calculated according to this method. 5. Correct the error caused by the sensor In practical applications, due to various reasons, the sensor cannot be installed in the ideal measurement area, and the sensor itself also has a certain error. At this time, the signal measured by the instrument cannot reflect the correct temperature. This may cause misunderstandings to users in some cases and affect the authenticity of the measurement. Therefore, it is sometimes necessary to correct the displayed value. You only need to set the program according to the instrument. In the first layer of control mode parameters, when the "SC" character appears in the upper PV window, change the value of the lower SV window. After completion, press the "SET" key to enter the corrected value into the instrument (warning! The correction value of the instrument is 00 when it leaves the factory, and this value cannot be modified without standard testing).

6. Data lock function
Set the data lock (LCK) function: used to prevent misoperation of some parameters that are not often set. The instrument has 3 levels of lock status. The parameters may be locked by each level. After the parameters are locked, they cannot be set or changed, but they can be viewed.

7. Fault diagnosis and maintenance
(1) If you doubt the accuracy of the instrument, you can insert the sensor into a fully stirred ice-water mixture. The instrument should display around 0℃. Insert the sensor into boiling water under standard atmospheric pressure. The instrument should display around 100℃. If the error is large, it is generally caused by the mismatch between the sensor graduation number and the instrument.
(2) When the display of each function and parameter setting on the instrument panel are normal, the indicator light has corresponding action, but the instrument loses control, it is generally because the external load of the instrument is short-circuited, open-circuited, or wrongly wired, which causes the internal components of the instrument to burn out.
At this time, please turn on the instrument. For contact output, please check whether the connecting wire has burn marks; for driving thyristors, please check whether the pulse transformer or photoelectric coupler has an open circuit. If the above situation occurs, please send the instrument back to the manufacturer for repair.
(3) Display fault 1:

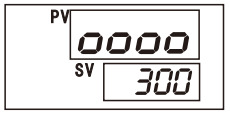

The measured value PV is shown as "oooo" in the figure above. It may be that the measured value (Pv) is higher than the maximum measurement range of the instrument or the thermocouple is broken or the instrument is faulty.

(4) Display fault 2:

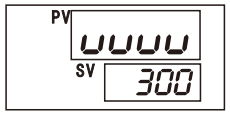

The measured value PV is shown as "uuuu" in the figure above. It may be that the thermocouple signal source is connected in reverse or the thermal resistor is short-circuited, or the temperature measurement probe is faulty or the instrument is faulty.

IX. Ordering instructions

The product model, graduation number, range, working power supply, and order quantity must be stated.
For example: XMTD-5211, K type, 0~800℃, AC220V, 5 units.

<Accessories> 1 pair of mounting brackets, 1 instruction manual